*

LouvreTec®

OPENING & RETRACT ROOFS / SUN LOUVRES / SHUTTERS

# DESIGN MANUAL

2025

- Opening Roofs
- Retract Roofs
- Louvretec Structural Frames
- Slidetec Frameless Glass Doors
- Outdoor Blinds
- Lighting
- Heating
- The Louvretec Room
- Sun Louvre Systems
- Retract Sun Louvres
- Shutters
- Engineering Reports
- Electrical Wiring Diagrams



Download this Design Manual
including Technical Documents at;
www.louvretec.com

# WELCOME

When you choose Louvretec, you're choosing decades of expertise, innovation & superior quality.

A stand out from the crowd.

LouvreTec®

OPENING & RETRACT ROOFS / SUN LOUVRES / SHUTTERS

©Louvretec 2025 – All Rights Reserved. Technical specifications subject to change without notice.

## COPYRIGHT

© - Louvretec Global Trust –2025– All Rights Reserved. All Copyright in this document is expressly held by the Louvretec Global Trust ("Louvretec").
The Copyright forms part of Louvretec's intellectual property rights and is owned by Louvretec.

## DISCLAIMER

Louvretec NZ Limited (which, as the context requires, shall be deemed to include its parent, subsidiaries, associated, Louvretec and related entities) ("we","our","us") has created this Design Manual as a resource for parties (such as our customers, affiliates and associates) interested in purchasing, distributing or reselling the products featured in the Design Manual (the "products"). We own this Design Manual and reserve all of our intellectual property rights in it. Your use of our Design Manual is subject to the following notices, disclaimers, terms and conditions ("Disclaimer & Notice").

The content, material and information contained in this Design Manual (the "Content") is provided on an "as is" basis for general reference and information purposes only to showcase our products and without responsibility or liability to you. For technical information you will need to contact us direct with your specific enquiry. To the fullest extent permitted by law, we make no representations, guarantees or warranties (express or implied) nor do we assume any liability to you whatsoever in relation to the accuracy, reliability, completeness or timeliness of the Design Manual or the Content therein. We believe that the Content is correct as at the day it was published within this Design Manual and based on the information available at the time of publication. We may, in our sole discretion, update, revise and/or amend the Content contained herein at any time without notice.

Nothing contained in the Design Manual should be construed as a recommendation by us to use any particular product in the range of products or that any particular product complies with all applicable laws and regulations relating to the importation, delivery, transportation nature, labelling, storage, offer for sale, marketing, installations, safety and use of the products or any other legal requirements in any country.

You acknowledge that the Content is supplied strictly on the condition that you will make your own determination as to its fitness or suitability for your purposes prior to acquisition and/or use of any products. The obligations, liabilities and responsibilities relating to the products are governed solely by the terms and conditions and warranties under which they are sold and none other.

We may, in our sole discretion update, revise, remove from sale and/or amend the products (including product specifications) contained herein at any time without notice and we may similarly remove from sale and/or make substitution of any products in our range.

Except for any express warranties that may be provided, to the fullest extent permitted by law, under no circumstances will we be liable to you or any third party claiming through you whatsoever for any:

- damages, losses, injuries or liabilities you may suffer (including, but not limited to special or consequential damages that you may suffer) as result of your use of this Design Manual, the Content and any products; or
- loss of profits, contract, incidental, indirect or consequential loss of any kind whatsoever, nor for any special, indirect, consequential or punitive damages arising out of the use of this Design Manual.

## INTELLECTUAL PROPERTY NOTICE

You acknowledge that all of the following form part of our copyright and other intellectual property rights (collectively our "Intellectual Property"): trademarks, service marks and logos (collectively the "Trademarks"); all drawings, diagrams, schematics, illustrations, designs and design rights (whether or not registered); the Content and all text, images, graphics and other materials and may be protected by world-wide copyright and other intellectual property laws and treaty provisions, even if it is not stated to be so protected.

Nothing in this Design Manual should be construed as granting any license or right to the Intellectual Property. You are only granted permission to copy, download and print hard copy portions of the Design Manual for using as a resource to consider purchasing the products (the "Permitted Use"). You are not permitted to use the Content or any of our Intellectual Property for any purpose other than Permitted Use. Any other use outside of the Permitted Use of our Content and/or Intellectual Property without our prior written permission is strictly prohibited and will violate our rights in our Intellectual Property. All rights not expressly granted herein are reserved. Any unauthorised use of the Content and/or our Intellectual Property may violate copyright, trademark and other applicable laws and could result in criminal or civil penalties.

By using our Design Manual you are deemed to have accepted this Disclaimer and Notice.

This Design Manual has been created in New Zealand. Accordingly, this Disclaimer & Notice is to be governed and construed in accordance with the laws of New Zealand and shall be subject to the exclusive jurisdiction of the New Zealand Courts. We are not liable or responsible to you whatsoever for providing any information relating to any matter in respect of legal compliance outside of New Zealand and therefore we make no warranty or representation that the Content complies with any laws, rules, regulations, procedures, codes or governmental directives, outside of the jurisdiction of New Zealand. If you choose to use the Design Manual and/or purchase products from outside of New Zealand, you are solely responsible for compliance with all applicable local laws.

## CREDITS

Worldmap by Freepik, Recycle logo by PNG Tree, Technology icons by ibrandify/Freepik



©Louvretec 2025 – All Rights Reserved. Technical specifications subject to change without notice.

LouvreTec®

OPENING & RETRACT ROOFS / SUN LOUVRES / SHUTTERS

# DESIGN MANUAL 2025


Overview 1.01-1.41 — 1

Opening Roofs 2.01-2.45 — 2

Retract Roofs 3.01-3.41 — 3

Louvretec Structural Frames 4.01-4.34 — 4

Slidetec Frameless Glass Doors & Panels 5.01-5.42 — 5

Outdoor Blinds 6.01-6.16 — 6

Lighting 7.01-7.12 — 7

Heating 8.01-8.17 — 8

The Louvretec Room 9.01-9.18 — 9

Sun Louvres Overview 10.01-10.08 — 10

KISS Pivot System Hand Operable Louvres 10.1.01-10.1.12 — 10.1

Spiral Pivot System Motorised & Hand Operable Louvres 10.2.01-10.2.45 — 10.2

Maxi Drive Motorised Maxi Sized Louvres 10.3.01-10.3.07 — 10.3

Sun Louvres End Fixed 10.4.01-10.4.49 — 10.4

Sun Louvres Bracket Fixed 10.5.01-10.5.43 — 10.5

Retract Sun Louvres Under Development 11.01-11.02 — 11

Shutters 12.01 12.37 — 12

Engineering Reports 13.01-13.32 — 13

Electrical Wiring Diagrams 14.01-14.55 — 14





©Louvretec 2025 – All Rights Reserved. Technical specifications subject to change without notice.



LouvreTec®

OPENING & RETRACT ROOFS / SUN LOUVRES / SHUTTERS

# The future of outdoor living technology... available today.

We bring modern architecture to your home and outdoor living space, to enhance your outdoor life.

Our designs are contemporary and timeless, embodying openness, freedom, and beauty.

Enjoy outdoor living spaces, with innovative design options. Louvretec is always bespoke and always one step ahead.

Let us be the one stop solution for your outdoor living wishes.

NEW ZEALAND MADE™

AUSTRALIAN MADE

©Louvretec 2025 – All Rights Reserved. Technical specifications subject to change without notice.




## Developed in Australasia... Available worldwide

The Louvretec Dealer Network is available right here in your neighbourhood.
Contact your team today & unlock the potential of your outdoor living space.



©Louvretec 2025 – All Rights Reserved. Technical specifications subject to change without notice.





LouvreTec®

OPENING & RETRACT ROOFS / SUN LOUVRES / SHUTTERS

## Overview


| | |
|---|---|
| The story continues | 1.09 |
| Louvretec Product Range | 1.10 - 1.19 |
| Residential applications | 1.20 - 1.21 |
| Commercial applications | 1.22 - 1.23 |
| Louvretec Green:Commitment to Sustainability | 1.24 - 1.29 |
| Somfy & Teleco Motors & Controllers | 1.30 - 1.31 |
| Powdercoat, Anodised & Special Finishes | 1.32 - 1.34 |
| Louvrecare | 1.35 |
| Product Specific Warranties | 1.36 - 1.37 |
| Product Range Blade Drawings at a glance | 1.38 - 1.39 |
| Louvretec Dealer Network | 1.40 - 1.41 |


©Louvretec 2025 – All Rights Reserved. Technical specifications subject to change without notice.

- "A purpose-built outdoor living area is one of the most requested additions in domestic architecture"
- "An easy access to covered outdoor entertaining spaces is one of the things most-valued by Aussie and Kiwi homeowners"
- "Everything has a flow to the outside"


©Louvretec 2025 – All Rights Reserved. Technical specifications subject to change without notice.

# THE STORY CONTINUES

## IT'S BEEN SAID THAT TIMING IS EVERYTHING...

...and certainly the timing was right for starting up an Opening Roof company 25 years ago, even though it may not have always seemed like it at the time! We had humble beginnings and good ideas, and being a family business, as we grew our family grew.

Today the Louvretec family continues to grow. We have great products but equally importantly we have great people - Take a look over page at snapshots of some of the worldwide Louvretec family. Amazingly all Louvretec Dealerships are family run businesses,with most instances the family member actively involved in the business.

It makes for a well proven, trustworthy business model, something we are all proud to be part of.

No matter where in the world you are situated, we hope we can be of service to you as we continue to bring you innovative, smart sun control solutions that contribute to create a sustainable home or building – keeping it truly green, our number one goal in Louvretec's commitment to sustainable living.

Thank you for your support in the past, we look forward to the privilege of being of service now and in the future.



BILL COLLINS
DIRECTOR
LOUVRETEC NZ LTD
LOUVRETEC AUSTRALIA PTY LTD



HEAD OFFICE, LOUVRETEC AUCKLAND, NZ

©Louvretec 2025 – All Rights Reserved. Technical specifications subject to change without notice.

## OVERVIEW

SECTION 1





It has been said of today's architecture that everything has a flow to the outside...
From Residential outdoor rooms to Commercial projects, the Louvretec product range lets you design for the sun and brings form and function to any home or building.

## OPENING ROOFS

SECTION 2



Louvretec Opening Roofs create more space in your home by creating a stunning outdoor room, perfect for gatherings. With different styles of Opening Roofs to choose from we have you covered no matter what your location's wind zone.



©Louvretec 2025 – All Rights Reserved. Technical specifications subject to change without notice.

## RETRACT ROOFS

SECTION 3



Louvretec is proud to bring you our Retract Roof range. Choose from two styles of Retract Roofs. With all of the functions of our standard Opening Roof range, the Retracts take it one step further by allowing the blades to retract back when you want. Enjoy the sky overhead or bring the Louvres back in place for operable overhead shelter.

## STRUCTURAL FRAMES

SECTION 4



Louvretec Aluminium Structural Frames provide support and strength for Louvretec Opening Roofs & Sun Louvre systems. Made from aluminium, they come in different sizes and can be powder-coated or anodised in a different colour from the Louvre system frame for a two tone effect.

©Louvretec 2025 – All Rights Reserved. Technical specifications subject to change without notice.

## SLIDETEC FRAMELESS GLASS DOORS & PANELS

SECTION 5



Louvretec's Slidetec Frameless Glass Doors are a great way to close in the sides of your Louvretec Opening Roof to create an ultimate outdoor room. The clear view of Slidetec Frameless Glass Doors provide excellent rain & wind protection when needed plus give the option of sliding them open to enjoy a gentle summer breeze if you wish.

## OUTDOOR BLINDS

SECTION 6



Louvretec's range of Outdoor Blinds include Motorised or Hand Operable Mesh Shade Blinds as well as Hand Operable PVC Blinds. Outdoor Blinds are a great way of creating an outdoor room that will become the new favourite room in your home. Mesh Shade blinds are available in different colours and degrees of mesh 'openness'.

Outdoor Blind options may vary between Louvretec Dealers.



©Louvretec 2025 – All Rights Reserved. Technical specifications subject to change without notice.

## LIGHTING

SECTION 7



Louvretec's Light-Tec Outdoor Lighting options adds that final finishing touch and creates atmosphere and functionality at night. Options include lighting to the front face or inside face of the gutter, or underframe downlights. Choose from Warm White,or RGB colours on request.

Lighting options may vary between Louvretec Dealers.

## HEATING

SECTION 8



Cosy up your Outdoor Room with an Outdoor Heater that pairs perfectly with a Louvretec Opening Roof.
Create & enjoy a warm and inviting outdoor living space even when the temperature cools.
Heating options may differ among Louvretec Dealers.

©Louvretec 2025 – All Rights Reserved. Technical specifications subject to change without notice.

## THE LOUVRETEC ROOM

SECTION 9



The Louvretec Room is the ultimate combination of a Louvretec Opening Roof with the addition of Slidetec Frameless Glass Doors, Outdoor Blinds or Coastal Shutters - all complemented with the addition of Louvretec outdoor lighting and heating. The Louvretec Room fast becomes the favourite gathering spot.

## SUN LOUVRES OVERVIEW

SECTION 10



Louvretec Sun Louvres bring lots of design options. Our Sun Louvres are available in a range of different widths and shapes including Airfoil, Rectangular, Flush & Weatherboard-look. They can be Motorised, Hand Operable, or if you prefer End or Bracket fixed. Louvretec Sun Louvres bring privacy, sun control and style.



©Louvretec 2025 – All Rights Reserved. Technical specifications subject to change without notice.

## KISS PIVOT SYSTEM HAND OPERABLE LOUVRES

SECTION 10.1



Operating off double drive-arms Louvretec's KISS Pivot System is an elegant, well proven and easy to operate Sun Louvre Pivot system.
Available in many powdercoat colours.

## SPIRAL PIVOT SYSTEM | MOTORISED & HAND OPERABLE LOUVRES

SECTION 10.2



Louvretec's award winning Spiral Pivot System is hidden away at the heart of our motorised and hand operable mid sized Louvre systems.

©Louvretec 2025 – All Rights Reserved. Technical specifications subject to change without notice.

## MAXI DRIVE | MOTORISED MAXI SIZED LOUVRES

SECTION 10.3



Designed to meet the ever increasing demand for motorised larger louvres, our Maxi Drive Pivot system is an excellent option. Somfy powered, the strong and capable Maxi Drive system is an ideal option.

## SUN LOUVRES END FIXED

SECTION 10.4



Using internal screw fixing ports, Louvretec Sun Louvres can be End Fixed in place. Choose the pitch and centre you require. End fixing is a neat and tidy way of bringing style and function to your home or building.



©Louvretec 2025 – All Rights Reserved. Technical specifications subject to change without notice.

## SUN LOUVRES BRACKET FIXED

SECTION 10.5



Louvretec Sun Louvres can be Bracket Fixed in place using our proprietary Bracket Fixing systems. Choose the pitch and centre you require.
Bracket Fixing provides long, unbroken runs of louvres bringing sun control and a fresh, modern, striking look.

## RETRACT SUN LOUVRES

SECTION 11



Louvretec is continuing with design and development of the Retract Sun Louvre Range.
Please contact your Louvretec Dealer for further information.

©Louvretec 2025 – All Rights Reserved. Technical specifications subject to change without notice.

## SHUTTERS

SECTION 12



Louvretec's all aluminium Coastal Shutters are designed to operate in the harshest of conditions.
Custom made with a choice of Airfoil or Rectangular Louvres, Coastal Shutters are available Sliding, Bifolding or Hinged and are always a welcome addition to any home or building.

## ENGINEERING REPORTS

SECTION 13




The Louvretec range of products are fully engineered to AS/NZ Standards.
Refer to Engineering Section 13 for product specific details as determined by regional wind zones.


©Louvretec 2025 – All Rights Reserved. Technical specifications subject to change without notice.

## ELECTRICAL WIRING DIAGRAMS

SECTION 14




Section 14 features a wide range of Wiring Diagrams with options covering numerous product combinations.

Your Louvretec Dealer will supply project specific wiring Diagrams for installs not covered in this section.

## LOUVRETEC GREEN POLICY

LOUVRETEC'S COMMITMENT TO SUSTAINABILITY

### Louvretec's Green Policy -Our commitment to Sustainability

At Louvretec, we are committed to sustainable & responsible business practices.

The Louvretec Green Policy outlines specific targets to achieve environmental sustainability efforts across our supply chain, with a goal of mitigating our carbon emissions every year.

We offset part of our carbon footprint by funding the planting of native trees through Trees That Count.

Louvretec Green aims to reduce the environmental impact of our products along their life cycle. Our careful supplier selection ensures that we meet our design requirements. We use brands such as Somfy, who have their own Act For Green® voluntary initiative, which further enhances our sustainability efforts.



Refer to pages 1.24 - 1.29 for more Louvretec Green info.

©Louvretec 2025 – All Rights Reserved. Technical specifications subject to change without notice.

# RESIDENTIAL

## Options for Residential projects




1. Mesh Outdoor Blind - Motorised
2. Motorised 200mm Maxi Louvres in an Elam Street Frame
3. 300x50 Aluminium Structural Frame
4. 150x150 Aluminium Structural Posts
5. Louvretec Gutter Lighting
6. 220/35 Slimline Opening Roof
7. Downlights
8. 220/35 Slimline Retract Roof
9. Outdoor Heater
10. Slidetec Frameless Glass Sliding Doors - 4 Panel
11. 135 Hi Span Vertical Sun Louvres



©Louvretec 2025 – All Rights Reserved. Technical specifications subject to change without notice.




12. End Fixed Chimney Surround – Bracket Fixed also available
13. Bracket Fixed Panel of 120mm Airfoil Louvres
14. Downlights
15. 250x50 Aluminium Structural Frame
16. 100x100 Aluminium Structural Posts
17. 180/30 Slimline Opening Roof
18. Louvretec Gutter Lighting (reflected) – to inside of gutter
19. Sliding Shutters - with 90mm Midi Louvres, hand adjustable KISS Pivot system infills
20. End Fixed Panel of 150mm Midi Louvres
21. Freestanding Louvretec Outdoor Room

©Louvretec 2025 – All Rights Reserved. Technical specifications subject to change without notice.

# COMMERCIAL

## Options for Commercial buildings & projects

1. 270 Translucent Opening Roof
2. Solar Powered Motorisation
3. Bracket Fixed Panels of Vertical RL 450 Square Sun Louvres
4. Bracket Fixed Panel of Horizontal 180 Airfoil Sun Louvres
5. Motorised, Vertical 200mm Flush Maxi Louvres in an Elam Street Frame
6. 220/35 Slimline Retract Roof - Blades stack one end
7. 220/35 Slimline Retract Roof - Blades stack to both ends
8. 165 Hi Span Vertical Sun Louvres
9. Aluminium Bi-folding Shutters - 8 panel with 90mm Midi Louvres, hand adjustable KISS Pivot system infills
10. Aluminium Sliding Shutters - 5 panel with 90mm Midi Louvres, hand adjustable KISS Pivot system infills
11. 220/35 Slimline Opening Roof
12. Slidetec Frameless Glass Sliding Doors - 4 panel
13. 180/30 Slimline Opening Roof
14. Mesh Outdoor Blind - Motorised






©Louvretec 2025 – All Rights Reserved. Technical specifications subject to change without notice.




©Louvretec 2025 – All Rights Reserved. Technical specifications subject to change without notice.

# THINK GREEN

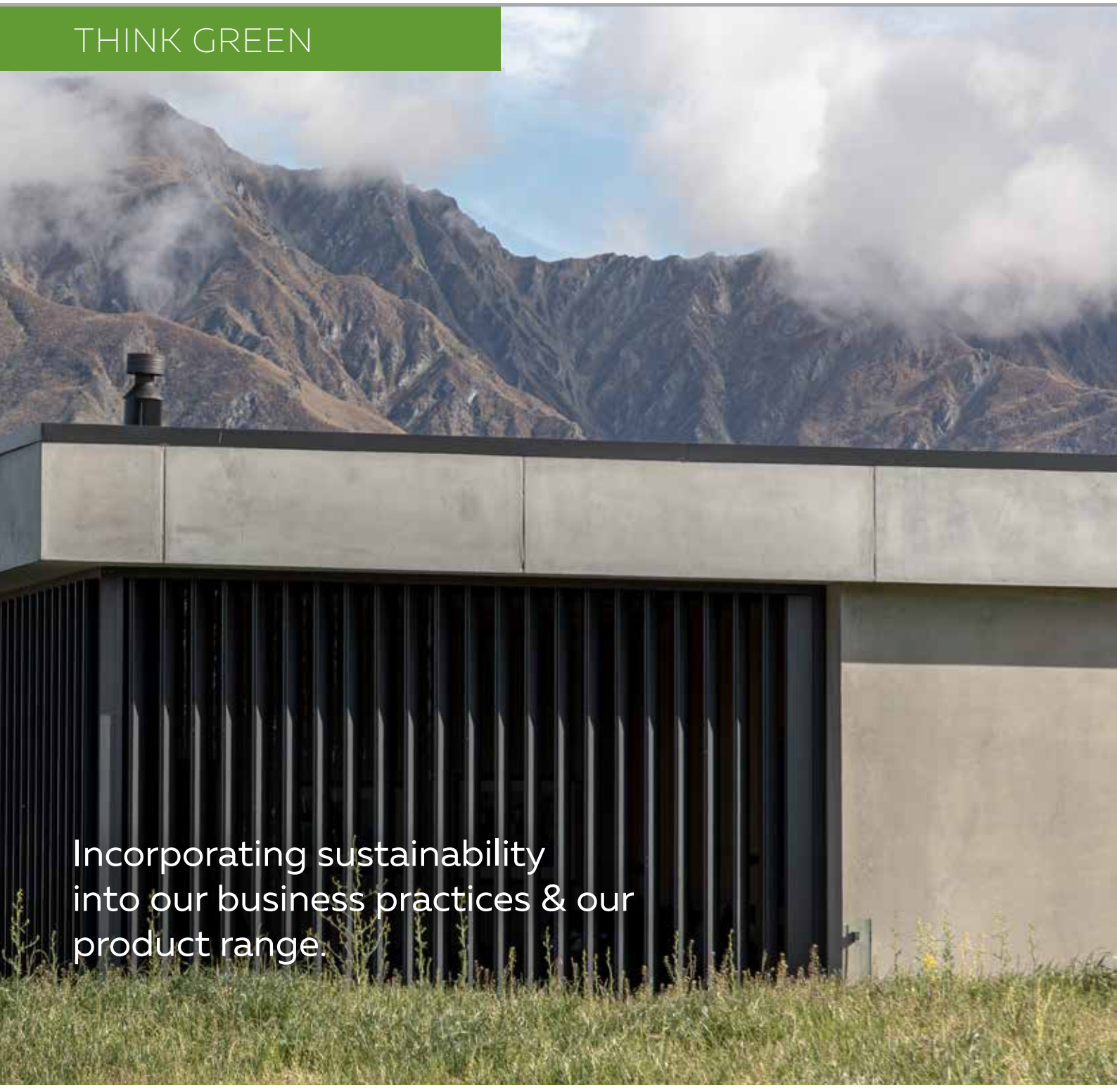




©Louvretec 2025 – All Rights Reserved. Technical specifications subject to change without notice.

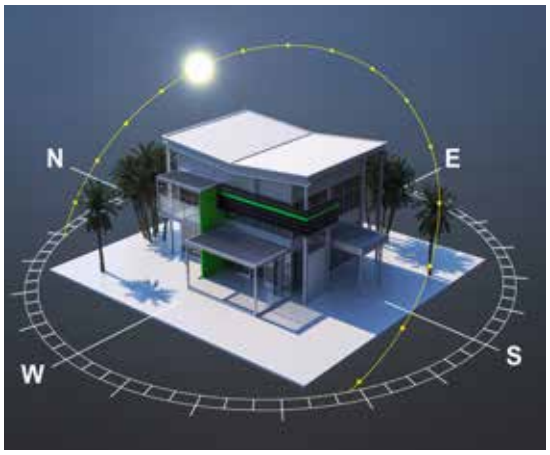

INFORMED DESIGN BASED ON THE SUN'S PATH


6-STAR GREEN STAR RATED BUILDING, AUCKLAND, NZ


THE ENVIRONMENTALLY SUSTAINABLE LITE-HOUSE, WAIHEKE ISLAND, NZ

LouvreTec® Green

OUR SUSTAINABILITY POLICY

## Our commitment to sustainability

At Louvretec we are committed to sustainable and responsible business practices for a better future.
To achieve this, we have developed the 'Louvretec Green' policy that outlines our best practice including our goals & sets out our plans of reducing our carbon footprint every year. We are continually making environmental improvements.
By choosing Louvretec, you can trust that you are engaging with a company that cares about the planet and future generations.

## What is our business?

- Our core business is to design, market, manufacture and install louvres. Louvretec products let you design for the sun by letting you set and control conditions including blocking UV rays - a sustainable building method.

## Louvres are available in various options & can be a key component in sustainable building practices

- **Fixed Sun Louvres** can be installed with blades set to allow sunlight to enter the building for warmth and light in winter - yet also set to prevent direct sunlight from entering in summer.
- **Motorised Standard Sun Louvres & Opening Roof Louvres** are even more effective, giving a wide range of control options in all seasons. Louvretec Spiral Pivot Sun Louvres can pivot through up to 180 degrees, allowing for optimal setting options at any time.
- **Retracting Opening Roofs** provide the ultimate in sun protection & outdoor living choices. Offering everything that Motorised systems offer, Retract systems do exactly that - they Retract. When you want direct sunlight or wide-open spaces, a touch of the button achieves all of that.
- **The Louvretec Outdoor Room incorporates all the options.** With Opening or Retract Roofs, & a choice of side panels including Louvres, Shutters, Slidetec Glass or Outdoor Blinds to suit.

©Louvretec 2025 - All Rights Reserved. Technical specifications subject to change without notice.

LouvreTec® Green
OUR SUSTAINABILITY POLICY

## All Louvretec Louvres are made from Aluminium

- Aluminium when first discovered, was worth more than gold

- It is a most abundant metal on the earth's crust, and the most frequently used, being versatile, lightweight, corrosion resistant and durable

- It is environmentally friendly because of its sustainability, being the most recycled industrial material on earth

- Recycling saves 95% of the energy used in its initial production from raw materials

- Over 75% of aluminium produced is still in use today – it is infinitely recyclable

- Aluminium is particularly easy to handle, the environmental impact is further reduced when used in construction as transportation cost are reduced

- Louvretec aluminium louvres are sourced ex-mill closest to where our Dealers are located:

1. In Australia & NZ for these regions
2. In the US for USA & Canada
3. In Belgium for Europe

- Aluminium is still known as "the wonder metal" for very good reason



A SUSTAINABLE SUPPLY CHAIN - ALUMINIUM FROM INEX WITH THEIR OWN SUSTAINABILITY PROGRAMME






## Louvretec Green's Policy & Targets

A SUSTAINABLE SUPPLY CHAIN: Louvretec Green aims to reduce the environmental impact of our products along their life cycle. Our careful supplier selection ensures that we meet our design requirements. We use brands such as Somfy, who have their own Act For Green® voluntary initiative, which further enhances our sustainability efforts.

Our other key suppliers have been verified to ensure that our supply chain materials comply with environmental and health regulations.

OPTIMISING & REDUCING VEHICLE FLEET EMISSIONS: We continue to reduce our transport emissions by choosing Battery Electric Vehicles (BEV) or Plug-in Hybrid Electric Vehicles (PHEV) wherever possible.

TREES THAT COUNT: We're working with Trees That Count to help mitigate parts of our carbon footprint over future years and help protect New Zealand's threatened biodiversity. That's good for our carbon footprint, and good for the planet.

TREES THAT COUNT
Native tree supporter



©Louvretec 2025 – All Rights Reserved. Technical specifications subject to change without notice.

LouvreTec® Green
OUR SUSTAINABILITY POLICY

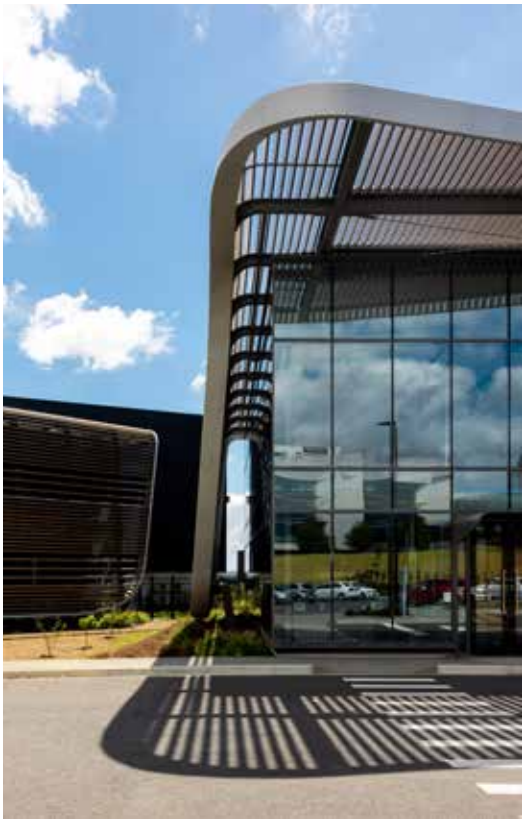

6-STAR GREEN STAR RATED BUILDING.
TĀWHARAU LANE, HIGHBROOK, AUCKLAND
"LIKE A KOROWAI (MĀORI CLOAK) IT PROVIDES PROTECTION PRIMARILY FROM SOLAR GAIN, WHILE ALSO CELEBRATING THE FIRST 6 GREEN STAR RATING FOR HIGHBROOK..." JONATHAN WALKER - JWA ARCHITECTS PRINCIPAL



6-STAR GREEN STAR RATED BUILDING.
TĀWHARAU LANE, HIGHBROOK, AUCKLAND

## Reduce, Reuse, Repair, Recycle

- Louvretec recycles paper, plastic, glass and aluminium offcuts. Offcuts of aluminium are collected, baled & sent to be recycled into other products - by the original extruder or by a local recycling company of which there are many.
- Louvretec's Head Office in conjunction with our waste management provider have completed a Waste Audit that helped us understand our waste & the correct disposal of it. Every month we receive a Carbon Footprint Report that details our Scope 3 /Category 4 emissions associated with landfill disposal. This report also identifies areas of improvement.
- The Louvretec factory team reuses packaging from our suppliers, while our Dealers continue to reuse our packaging.
- Louvretec aspires to use more responsible packaging solutions and target to reduce the amount of petroleum plastic such as polystyrene in our packaging.
- We strive to use packaging that is recyclable, reusable or recycled wherever possible. Louvretec offices use responsibly sourced paper products with the Forest Stewardship Council® (FSC®) Chain of Custody certification.
- The Louvretec product range is designed for easy disassembly for maintenance and recycling.

## Solar Solution

We're proud to bring you our first Solar Powered, Freestanding Opening Roof - The Suburban Express Solar Powered Roof.
The sun is an energy source that is renewable and inexhaustible by definition. Everywhere gets sunlight. The Suburban Express Roof is also available as a Hand Operable Roof with a handle.



## Health, Safety & Wellbeing of our Staff

We are committed to providing a healthy and safe workplace for our employees. Safety in our workplace is paramount and we are committed to maintaining a SiteWise Gold Rating. We have a Louvretec Employee Health and Wellbeing Policy in place which provides staff access to mental health and wellbeing support.

Louvretec's Employee Induction document outlines our expectations for a safe workplace. We require our employees, suppliers & service providers to be compliant with all applicable laws.

## The Louvretec Green team - Monitor, Review, Improve

The Louvretec Green Team meets quarterly with Louvretec Management to discuss achievements and to address areas needing improvement. This ensures Louvretec Green stays on a path of steady growth.

©Louvretec 2025 - All Rights Reserved. Technical specifications subject to change without notice.

LouvreTec Green
OUR SUSTAINABILITY POLICY

## Off the grid

## Solar Powered Spiral Pivot Opening Roofs

Using the very latest solar energy technology, Louvretec introduces our first solar powered Opening Roof option.

No power connection required, the quiet solar powered motor can be controlled by a wireless handheld remote.

Incorporated within the solar panel is a powerful battery with a 45-day life cycle based on two open/close cycles per day.

Specific algorithms for power management allow for battery charging without direct sunlight.

Innovative, efficient, clean & quiet - presenting Louvretec Solar.



SOLAR POWERED OPENING ROOF



FREESTANDING, SOLAR POWERED OPENING ROOF



©Louvretec 2025 – All Rights Reserved. Technical specifications subject to change without notice.

LouvreTec® Green
OUR SUSTAINABILITY POLICY



OUR PRODUCTS HELP PEOPLE LIVE A MORE ENVIRONMENTALLY FRIENDLY LIFESTYLE

## Explore the Green Side of our Product Range

Sustainability is a top priority in the design industry. Louvretec incorporates sustainability in to our best practice and our product range.
Louvretec Opening Roofs & Sun Louvres will always be made from recyclable aluminium.

Louvretec's product range helps create sustainable, aesthetically pleasing, functional, outdoor living spaces that enhance the user's lifestyle and can improve the environmental balance of a home or building.

## Conscious future

The Louvretec product range helps you future proof your home for your family's changing needs or for the next homeowner to enjoy. Sustainability & innovation go together, along with adaptability. Creating a home that is energy-efficient, equipped with smart products that bring function to the user & that's ready to meet future needs & can evolve for future generations is the key to a comfortable and environmentally conscious future.

## Easy access for Repair & maintenance

The Louvretec product range is easily cared for (either by Louvrecare which is our after-sales care division, or by the end user). Motors and other working parts have easy access for maintenance which means these can be repaired instead of replaced.





HAND OPERABLE OPENING ROOF WITH CRANK HANDLE

©Louvretec 2025 – All Rights Reserved. Technical specifications subject to change without notice.

# CURRENT REMOTE CONTROL OPTIONS FOR OPENING ROOFS & OTHER LOUVRETEC MOTORISED PRODUCTS

## Remote options

Remote Control technology is constantly changing and upgrading. Please discuss with your local Louvretec Dealer and view our website for current updates.

Key: Remote Compatibility

opening roofs
outdoor blinds
louvretec retract
ADI Retract Technology
Lighting
sun louvres
Heating

| | |
|---|---|
| **Situo 1 & Smoove 1 Wall Switch**<br>The Situo 1 Remote by Somfy is a one-channel handheld remote using Radio Technology Somfy (RTS).<br>Smoove is a wireless wall mounted switch providing the same functionality as a remote.<br>Perfect for controlling a single Opening Roof. |  |
| **Situo 5 & Smoove 4 Wall Switch**<br>The Situo 5 by Somfy is a five-channel handheld remote using Radio Technology Somfy (RTS). Perfect for controlling a group of motorised Louvretec products (excluding the Retract Roof).<br>Smoove 4 is a wireless wall switch providing the same functionality as a remote but with 4 channels.<br>With the addition of the BST11 Bridge, both remotes can control Lighting and Heating. |  |
| **Telis 16**<br>The Telis 16 is a 16-channel handheld remote using Radio Technology Somfy (RTS). Made to control a larger group of motorised Louvretec products (excluding the Retract Roof).<br>The addition of a BST 11 Bridge allows this remote to control Lighting & Heating. |  |
| **Noon Duo**<br>The Noon Duo is a 9-channel handheld remote.<br>The Noon Duo allows control for Louvretec Retract Roofs, Lighting and Heating. |  |
| **Daisy App**<br>Daisy is an app by Teleco that allows the control of Louvretec Retract Roofs, Lighting and Heating. Download the free app and install a Daisy Box which communicates with your devices via radio signal. |  |
| **Solar Powered** No power connection required, the solar powered motor can be controlled by a wireless handheld remote or a Smart Home solution. Battery has a 45-day life cycle based on two open/close cycles/ day. Algorithms for power management allow for battery charging without direct sunlight. | <br>SOLAR POWER OPTION FOR SPIRAL PIVOT OPENING ROOFS |


©Louvretec 2025 – All Rights Reserved. Technical specifications subject to change without notice.

# CURRENT REMOTE CONTROL OPTIONS FOR OPENING ROOFS & OTHER LOUVRETEC MOTORISED PRODUCTS

## Remote options

Remote Control technology is constantly changing and upgrading. Please discuss with your local Louvretec Dealer and view our website for current updates.

Key: Remote Compatibility

opening roofs
outdoor blinds By Louvretec
louvretec retract ADI Retract Technology
Lighting
sun louvres By Louvretec
Heating

### Connexoon

Connexoon is an app by Somfy that allows the control of Louvretec Opening Roofs from your device. The addition of a BST 11 Bridge also allows control of Louvretec Lighting & Heating. Download the app & install the RTS Box (plugs in to your router & wall socket) which communicates with your devices via signal.



BST 11 BRIDGE & CONNEXOON APP BY SOMFY

### TaHoma

TaHoma by Somfy is the central hub that connects and controls the smart home ecosystem. Convenient, intuitive & easy to configure across a wide range of smart home systems.



TAHOMA CENTRAL HUB

### BMS

A Building Management System (BMS) is a pad from which you can manage a home's shading, heating, cooling, ventilation & lighting controls. Louvretec Opening Roofs can be integrated into a home or building's BMS. Retract Roof, Heating & Lighting can be integrated via an RS232 Transmitter.





BUILDING MANAGEMENT SYSTEM (BMS)

### Hard Wired Switch

A Somfy Hard Wired Switch provides control of a motorised Opening Roof via a 230v wall switch wired directly to the motor.



SOMFY SWITCH
FOR AN OPENING ROOF

### Wall Mounted Remote

A Teleco Wall Mounted Remote provides control of a single Retract Roof, LED Lights, or a Dimmable Heater.



TELECO WALL MOUNTED REMOTE
FOR A RETRACT ROOF

# RAIN SENSOR OPTION

## Teleco Wired Rain102H

The Rain102H by Teleco Rain Sensor can be programmed to automatically close the Louvres & includes integrated heating function for preventing false activation in case of ice and snow.



TELECO RAIN SENSOR

**Detailed wiring diagrams** Refer Section 14 Electrical Wiring Diagrams for cross section of typical applications of above options.

©Louvretec 2025 – All Rights Reserved. Technical specifications subject to change without notice.

# SURFACE FINISHES

## Powdercoating

- All Louvretec powdercoating carries a guarantee on the colour stability and surface finish as set out in both the Louvretec Product Warranty & the Louvretec PS1 document.
- Choose from over 100 powdercoat colours
- Dulux's Duralloy +PLUS solid range is also available as a powdercoating option. The +PLUS colour range is a collection of popular solid colours delivered with warranty grade advanced highly durable polyester thermosetting powder. The +PLUS range has a 15 year extended colour warranty. Contact Dulux for more information on the +PLUS range.
- Powdercoat options vary between countries. Discuss with your local Louvretec Dealer.



OKARITO
Matt 20S1379M



GRAVEL
Matt 20S7824M



PURE WHITE



WINDSOR GREY



OFF WHITE



BLACK



TITANIA



O'KEEFE GREY

SELECTION OF DULUX +PLUS POWDERCOAT COLOUR RANGE. CONTACT YOUR DEALER TO VIEW ALL OF THE OPTIONS



GULL GREY



ARCTIC WHITE



LIGNITE



SANDSTONE GREY



FLAXPOD



GREY FRIARS



BLACK



CHARCOAL



CANVAS CLOTH



BRONCO



O'KEEFE GREY



KAURI



APPLIANCE WHITE



WOODWIND



OFF WHITE



RIVERGUM BEIGE

SELECTION OF DULUX DURALLOY SOLID COLOUR POWDERCOAT COLOUR RANGE. CONTACT YOUR DEALER TO VIEW ALL OF THE OPTIONS



©Louvretec 2025 – All Rights Reserved. Technical specifications subject to change without notice.

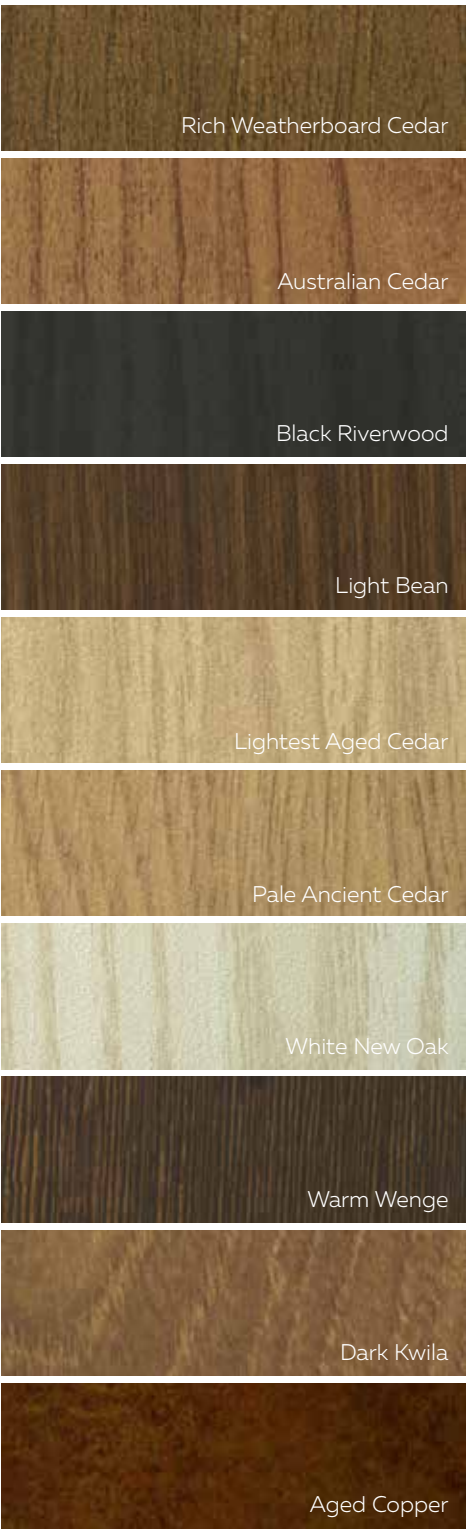


SELECTION OF WOODGRAIN & SPECIAL FINISHES

# SURFACE FINISHES

## Wood Grain Powdercoating

- A wood grain finish that has been bonded on to the Louvretec product is available. This type of finish looks like timber but the difference being it's durability and lower maintenance
- Choose from a range of wood grain and special finishes including pale timber colours through to reddish and dark brown timber shades
- Selection of finishes subject to change
- Options vary between countries
- Discuss with your local Louvretec Dealer

©Louvretec 2025 – All Rights Reserved. Technical specifications subject to change without notice.

# SURFACE FINISHES

## Anodising

- Louvretec products are constructed of aluminium and can be anodised providing a beautiful matte sheen and a durable tough wearing finish.
- Colour choices include natural silver, black and bronze
- Anodised finishes provide a unique look designed to subtly change in appearance as the light conditions alter in the day and according to the angle at which they are viewed.
- Contact Louvretec for an anodised colour swatch to view in natural light.
- Anodised options vary between countries.
- Discuss with your local Louvretec Dealer.




A SELECTION OF MATT NATURAL ANODISED & ELECTROLYTIC ANODISED COLOURS

CONTACT YOUR DEALER TO VIEW YOUR ANODISED OPTIONS


©Louvretec 2025 – All Rights Reserved. Technical specifications subject to change without notice.



IN-HOUSE EXPERIENCED LOUVRECARE MAINTENANCE & VALET TECHNICIANS






# LOUVRECARE

## Preventative maintenance and valet

Regular, scheduled servicing by a Louvrecare team has real benefits. Louvrecare Service teams are in-house, experienced technicians keeping your Louvretec product in good working order & optimum performance.

The Louvrecare programme is optional. Select as many service intervals as you require.

Louvrecare is available for any Louvretec product no matter how old.

## A Louvrecare service includes

- Comprehensive cleaning of your Louvretec product
- Testing of moving parts
- Seals checked
- General wear and tear checked
- Replacement componentry if needed (as covered under the standard Louvretec Product Warranty).
- Louvrecare can vary between Dealerships. Discuss with your local Louvretec Dealer.




LouvreCare™
PREVENTATIVE MAINTENANCE & VALET

©Louvretec 2025 – All Rights Reserved. Technical specifications subject to change without notice.

# WARRANTY

## Peace of Mind

### Product Specific Warranties

The complete range of Louvretec Products are covered by product specific warranties


LOUVRETEC PRODUCT WARRANTY

OPENING ROOFS - SUN LOUVRES - SHUTTERS

**The Louvretec range of products:**

All Louvretec branded products are designed and engineered in Australia & New Zealand by Louvretec to comply with relevant AS/NZS standards – refer to full Louvretec Engineering data Design Manual 2025 Section 13.

Louvretec has the most extensive range of outdoor sun shading/ outdoor living products available in Australasia, backed by a comprehensive network of Louvretec Dealers.

Most Louvretec products sold in Australia are made in Australia*

Most Louvretec products sold in New Zealand are made in New Zealand*

*Some specialised products may only be made in Australia or in NZ and are shipped between each country.

**The Authorised Louvretec Dealer Network:**

Your Louvretec product will have been supplied and installed by your local Authorised Louvretec Dealer. All Louvretec Dealerships are privately owned, and the same Louvretec Dealer who supplied your Louvretec will also service your Louvretec.

Your Louvretec product has been "Engineered for Life" and we are committed to ensuring that happens.

**Louvrecare:**

Preventative maintenance and valet. Regular scheduled servicing by a Louvrecare team has real benefits. Louvrecare can vary between Dealerships – consult your local Louvretec Dealer.

LouvreCare

Engineered for Life

LouvreTec


LOUVRETEC PRODUCT WARRANTY

OPENING ROOFS - SUN LOUVRES - SHUTTERS

| | |
|---|---|
| warranty details | All product installed by Louvretec (excluding Outdoor Blinds – please refer separate warranty for this) , or an Authorised Louvretec Installer, is from date of invoice, fully warranted for the first two years. This warranty covers workmanship, louvres and all componentry, motors, switches and electronics with all labour costs included. In addition, from year two to end of year five, a warranty replacement of parts only applies for all motors, switches and electronics. Labour costs excluded. (Excludes any wiring and electrical connections done by others). |
| motorisation | Louvretec exclusively uses Somfy motors, switches and electronics. Somfy offers a 5-year warranty on all motors and electronics. Please contact Louvretec NZ or Somfy for a complete list of all terms and conditions. |
| product materials | All aluminium louvres and extrusions used in Louvretec's systems are manufactured in an ISO9002 quality assured environment to AS1866 & AS2902 standards. Marine grade T316 stainless steel is used for drive axles, with stainless steel componentry fixings being standard. Plastic injected moulded componentry is all UV stabilised |
| powdercoat finishes | A wide range of exterior powder coat finishes are available. Duralloy or equivalent is the standard finish supplied unless stated otherwise and this carries a 10 year film and colour integrity warranty as per the Dulux Powder and Industrial Coatings Warranty. If your project has used the Duratec powdercoat range please refer to the Dulux Powder and Industrial Coatings Warranty wording. |
| anodised finishes | The current specifications re anodised aluminium range from 12-20-25 microns depth. The greater the microns the better the protection. With regular cleaning anodised material will retain its original integrity for no less than 10 years. |
| fully engineered | Our louvre systems are designed to conform to New Zealand and Australian standards wind loadings. Full engineering details available on request. |
| cleaning | Periodic cleaning is essential to remove dirt, grime and accumulated salt deposits from both powder coated and anodised surfaces. Three steps for cleaning are:<br>1. Carefully remove any loose deposits with a wet sponge<br>2. Use a soft non abrasive brush and a mild car cleaning detergent solution to remove dust, salt and other deposits.<br>3. Rinse off with clean fresh water. |
| product description | _____ |
| louvrecare | Louvrecare is a planned preventative maintenance and valet service designed to keep your Louvretec product clean and in good working order. Contact your Louvretec Dealer for full details. LouvreCare |
| effective from | Warranty effective from _____/_____/_____<br>Louvretec Representative _____ Print name _____<br>Site Address _____ |

LOUVRETEC NZ LTD
T +64 9 415 4949
Head office: 23c Douglas Alexander Parade, Albany 0632, Auckland New Zealand
E info@louvretec.co.nz
www.louvretec.com

| | |
|---|---|
| Opening Roofs | Section 2 |
| Lighting | Section 7 |
| Sun Louvres | Section 10 |
| Shutters | Section 12 |


LOUVRETEC PRODUCT WARRANTY

RETRACT ROOFS

**The Louvretec range of products:**

All Louvretec branded products are designed and engineered in Australia & New Zealand by Louvretec to comply with relevant AS/NZS standards – refer to full Louvretec Engineering data Design Manual 2025 Section 13.

Louvretec has the most extensive range of outdoor sun shading/ outdoor living products available in Australasia, backed by a comprehensive network of Louvretec Dealers.

Most Louvretec products sold in Australia are made in Australia*

Most Louvretec products sold in New Zealand are made in New Zealand*

*Some specialised products may only be made in Australia or in NZ and are shipped between each country.

**The Authorised Louvretec Dealer Network:**

Your Louvretec product will have been supplied and installed by your local Authorised Louvretec Dealer. All Louvretec Dealerships are privately owned, and the same Louvretec Dealer who supplied your Louvretec will also service your Louvretec.

Your Louvretec product has been "Engineered for Life" and we are committed to ensuring that happens.

**Louvrecare:**

Preventative maintenance and valet. Regular scheduled servicing by a Louvrecare team has real benefits. Louvrecare can vary between Dealerships – consult your local Louvretec Dealer.

LouvreCare

Engineered for Life

LouvreTec


LOUVRETEC PRODUCT WARRANTY

RETRACT ROOFS

louvretec retract

| | |
|---|---|
| warranty details | All Retract Roofs installed by Louvretec, or an Authorised Louvretec Installer, is from date of invoice, fully warranted for the first two years. This warranty covers workmanship, louvres and all componentry, motors, switches and electronics with labour costs included. From year two to end of year five, a warranty replacement of parts' only applies for all motors. Labour costs excluded (also excludes any wiring and electrical connections by others). |
| motorisation | Louvretec exclusively uses Somfy motors. Somfy offers a 5 year warranty on all motors and electronics. Please contact your Louvretec Dealer or Somfy for a complete list of all terms and conditions. |
| product materials | All aluminium louvres and extrusions used in Louvretec's systems are manufactured in an ISO9002 quality assured environment to AS1866 & AS2902 standards. Marine grade T316 stainless steel is used for drive axles, with stainless steel componentry fixings being standard. Plastic injected moulded componentry is all UV stabilised. |
| powdercoat finishes | A wide range of exterior powder coat finishes are available. Duralloy or equivalent is the standard finish supplied unless stated otherwise and provides excellent resistance to weather and salt spray. This carries warranties of a maintainable service life of 25 years, film integrity of 10 years and colour integrity of 7 years. |
| anodised finishes | The current specifications re anodised aluminium range from 12-20-25 microns depth. The greater the microns the better the protection. With regular cleaning anodised material will retain its original integrity for no less than 10 years. |
| fully engineered | Our louvre systems are designed to conform to New Zealand and Australian standards wind loadings. Full engineering details available on request. |
| cleaning | 1. Periodic cleaning is essential to remove dirt, grime and associated salt deposits from both powder coated and anodised surfaces.<br>2. Carefully remove any loose deposits with a wet sponge.<br>3. Use a soft non-abrasive brush and a mild detergent or car cleaning solution to remove dust, salt and other deposits. Rinse well with clean water.<br>4. If your Retract roof downpipe connects to tank water supply be sure to dis-connect before cleaning.<br>5. Most importantly – USE REGULARLY! We recommend at least once every two weeks. |
| product description | _____ |
| louvrecare | Louvrecare is a planned preventative maintenance and valet service designed to keep your Louvretec product clean and in good working order. Contact your Louvretec Dealer for full details. LouvreCare |

LOUVRETEC NZ LTD
T +64 9 415 4949
Head office: 23c Douglas Alexander Parade, Albany 0632, Auckland New Zealand
E info@louvretec.co.nz
www.louvretec.com

| | |
|---|---|
| Retract Roofs | Section 3 |



©Louvretec 2025 – All Rights Reserved. Technical specifications subject to change without notice.

Slidetec Frameless
Glass Sliding Door Panels Section 5




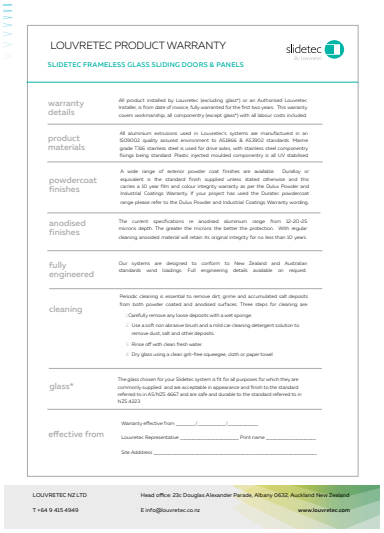


Outdoor Blinds Section 6







Lighting Section 7

Heating Section 8

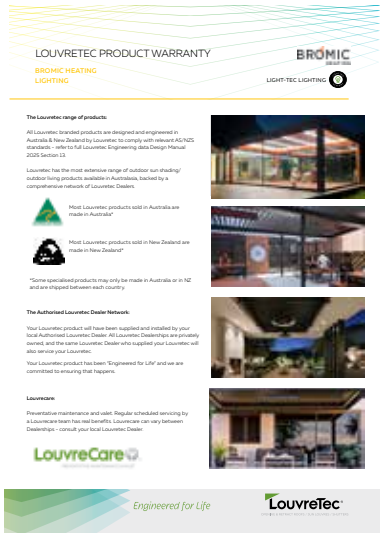


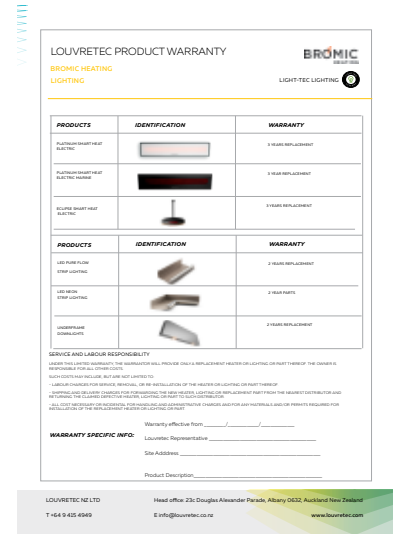


©Louvretec 2025 - All Rights Reserved. Technical specifications subject to change without notice.

# OPENING ROOF OPTIONS

Refer to Opening Roofs Section 2



180/30 SLIMLINE ROOF
PG 2.19



200/35 SLIMLINE ROOF
PG 2.23



220/35 SLIMLINE ROOF (RETRACT COMPATIBLE)
PG 2.27



220/45 ALPINE ROOF (RETRACT COMPATIBLE)
PG 2.31



200 SUBURBAN & SUBURBAN SOLAR
PG 2.35 PG 2.14

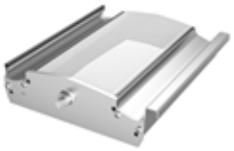

270 TRANSLUCENT ROOF
PG 2.39

# RETRACT ROOF OPTIONS

Refer to Retract Roof Section 3



220/35 SLIMLINE RETRACT
PG 3.12



220/45 SLIMLINE ALPINE RETRACT
PG 3.15

# AIRFOIL SUN LOUVRE OPTIONS

Refer to Sun Louvres Sections 10 - 10.5



90 MIDI LOUVRE
PG 10.1.06



150 MIDI LOUVRE
PG 10.2.23



120 AIRFOIL LOUVRE
PG 10.2.18



180 AIRFOIL LOUVRE
PG 10.2.20



200 MAXI LOUVRE
PG 10.2.25



300 MAXI LOUVRE
PG 10.4.32



600 MAXI LOUVRE
PG 10.4.32



©Louvretec 2025 – All Rights Reserved. Technical specifications subject to change without notice.

# RECTANGULAR SUN LOUVRE OPTIONS

Refer to Sun Louvres Sections 10 - 10.5



95 BELLA VISTA LITE LOUVRE
PG 10.1.10



95 BELLA VISTA HEAVY LOUVRE
PG 10.1.11

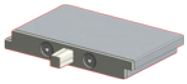

120 FLUSH MINI LOUVRE
PG 10.2.29



180 FLUSH MIDI LOUVRE
PG 10.2.31

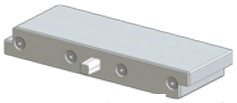

200 FLUSH MAXI LOUVRE
PG 10.2.33



125 WEATHERBOARD LOUVRE
PG 10.4.26



180 WEATHERBOARD LOUVRE
PG 10.4.27



150 HELENA BAY LOUVRE
PG 10.4.25



135 HI SPAN BALUSTRADE LOUVRE
NZ COMPLIANT
PG 10.2.38



165 HI SPAN BALUSTRADE LOUVRE
AUSTRALIAN COMPLIANT
PG 10.2.42

# RECTANGULAR RL SUN LOUVRE OPTIONS

Refer to Sun Louvres Sections 10 - 10.5

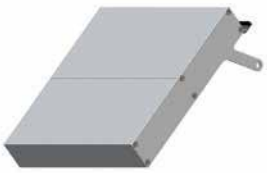

RL 300 SQUARE LOUVRE
PG 10.4.40



RL 450 SQUARE LOUVRE
PG 10.4.41



RL 600 SQUARE LOUVRE PG 10.4.42

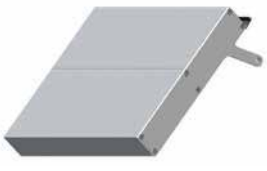

RL 300 MITRE LOUVRE
PG 10.4.40



RL 450 MITRE LOUVRE
PG 10.4.41

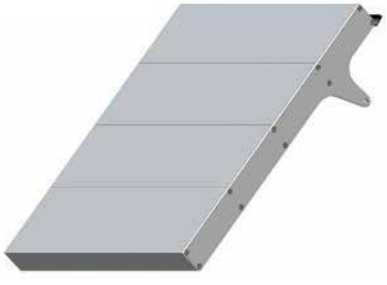

RL 600 MITRE LOUVRE
PG 10.4.42

©Louvretec 2025 – All Rights Reserved. Technical specifications subject to change without notice.

GLOBAL **24/7**

# RIGHT HERE

With 45 Dealers located around the world, our network of authorised Louvretec Dealerships make it easy for you to discover and view the product range up close and personal.

## Louvretec New Zealand Dealers (a small selection of our Dealer network)



NORTHLAND, NZ



AUCKLAND HEAD OFFICE, NZ



LOUVRETEC EXPORT DIVISION AIRBORNE RD, AKL ,NZ



WAIKATO, NZ



BAY OF PLENTY, NZ



TAUPO & HAWKE'S BAY, NZ




GISBORNE, NZ



TARANAKI, NZ




MANAWATU, NZ



WELLINGTON, NZ



NELSON, BLENHEIM, MARLBOROUGH, NZ



CANTERBURY, NZ



TIMARU, NZ



CROMWELL, QUEENSTOWN, NZ



DUNEDIN, NZ




SOUTHLAND, NZ

## Louvretec Asia & Louvretec South Pacific Dealers



THE NETHERLANDS



SINGAPORE

## The Netherlands



HONG KONG



PETAH TIKVA



CANADA



NEW YORK



BARBADOS




BAY AREA & SACRAMENTO, CA



©Louvretec 2025 – All Rights Reserved. Technical specifications subject to change without notice.



MURWILLUMBAH, NSW
MANUFACTURING FACTORY

# IN YOUR NEIGHBOURHOOD

Visit our Locations page on our website to find your closest Louvretec Dealer.
www.louvretec.com

## Louvretec Australia Dealers (a selection of our Dealer network)



TOWNSVILLE, QLD



BRISBANE, QLD




BALLINA, NSW



COFFS HARBOUR, NSW



PORT MACQUARIE, NSW



SYDNEY NORTH, GOSFORD,
NEWCASTLE, NSW



SYDNEY, NSW




ORANGE, NSW



WOLLONGONG, NSW
MANUFACTURING FACTORY



WOLLONGONG, NSW




MITTAGONG, NSW



ILLAWARRA, NSW




CANBERRA, ACT




BATEMANS BAY, NSW



ALBURY, SOUTHERN NSW



BAIRNSDALE, VIC



MELBOURNE, VIC



TASMANIA, TAS



ADELAIDE, SA




PERTH, WA

## Louvretec USA Dealers



DENVER, CO




BAY AREA & SACRAMENTO, CA



HOUSTON, TX




SAN DIEGO, CA

©Louvretec 2025 – All Rights Reserved. Technical specifications subject to change without notice.

# opening roofs

*By Louvretec*


| | |
|---|---|
| Gallery | 2.04 - 2.05 |
| Product range | 2.06 - 2.07 |
| Drive systems options & details | 2.08 |
| Motor Location & Clearances | 2.09 |
| Blade Direction | 2.10 |
| Louvretec Structural Frame | 2.11 - 2.12 |
| Raking Roofs | 2.13 |
| Solar Powered opening roofs | 2.14 |
| Opening Roof Blades & Gutter Options | 2.15 |
| Box Section Frames, Posts & Flashings | 2.16 |
| Remote Control Options | 2.17 - 2.18 |
| Louvretec 180 opening slimline roof | 2.19 – 2.22 |
| Louvretec 200 opening slimline roof | 2.23 - 2.26 |
| Louvretec 220 opening slimline roof | 2.27 – 2.30 |
| Louvretec 220/45 opening alpine* roof | 2.31 – 2.34 |
| *For larger spans, typically alpine and coastal locations | |
| Louvretec 200 opening suburban roof | 2.35 – 2.38 |
| Louvretec 270 opening translucent roof | 2.39 – 2.42 |
| Warranty | 2.43 - 2.44 |


©Louvretec 2025 – All Rights Reserved. Technical specifications subject to change without notice.





©Louvretec 2025 – All Rights Reserved. Technical specifications subject to change without notice.




©Louvretec 2025 – All Rights Reserved. Technical specifications subject to change without notice.


1.


2.


3.


4.

1. LOUVRETEC 200 SUBURBAN ROOF 2. LOUVRETEC 270 TRANSLUCENT ROOF 3. LOUVRETEC 220 SLIMLINE ROOF 4. FLOW TO THE OUTDOORS



©Louvretec 2025 – All Rights Reserved. Technical specifications subject to change without notice.



5.



6.



7.




8.

5. OUTDOOR ROOM 6. OPENING ROOF CLOSED 7. POOLSIDE COMFORT 8. URBN SURF PARK, SYDNEY OLYMPIC PARK

©Louvretec 2025 – All Rights Reserved. Technical specifications subject to change without notice.

# ALL NEW

# INTRODUCING LOUVRETEC SLIMLINE OPENING ROOFS

## Already award-winning!

Louvretec's fresh range of Opening Roofs incorporates slimline design with "Cushion Closing" functionality.

Louvretec's latest louvre roof range, developed for both Spiral Pivoting Opening Roofs and Retract Roofs, suits everything from large multi-roof projects to cosy outdoor living areas, in residential homes and commercial buildings.

Louvretec Australia has won the Product Innovation Award at the inaugural Window Shading Association of Australia (WSAA) Industry Awards 2026. Our winning entry, "One Louvre Blade, Two Patio Roof Systems," showcased the Louvretec 220/45 opening alpine* roof blade, a single louvre profile that works across both the Spiral Pivot and Retract Roof systems.

## Louvretec slimline roof key features

Available in four sizes;·

- Louvretec 180 opening slimline roof (Spiral Pivot only)
- Louvretec 200 opening slimline roof (Spiral Pivot only)
- Louvretec 220 opening slimline roof
  (Spiral Pivot & Retract Compatible)
- Louvretec 220/45 opening alpine* roof
  *For larger spans, typically alpine and coastal locations
  (Spiral Pivot & Retract Compatible)

## Completing the range

- Louvretec 200 opening suburban roof; designed with quality and economy in mind.
- Louvretec 270 opening translucent roof; incorporating a translucent panel, ideal for use when loss of light is an issue.
- Louvretec opening roofs can be incorporated as p… home or building, or free-standing.

## Proudly NZ & Australian designed and manufactured

All jointly designed, manufactured and distributed worldwide by; Louvretec NZ Ltd & Louvretec Australia Pty Ltd.



OPEN UP YOUR HOME

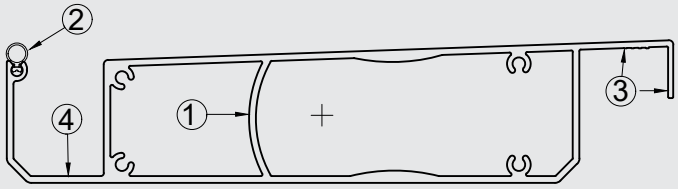


### Louvretec 220/45 opening alpine* roof
(Spiral Pivot & Retract Roof compatible)

Sleek, functional design, clean and uncluttered when open or closed. Somfy powered or hand-operated award winning Spiral Pivot operating system. *For larger spans, typically alpine and coastal locations. We're also proud to announce, this versatile louvre won the Window Shading Association of Australia Product Innovation Award, 2026.

1. Design strength of an extruded double box section
2. "Cushion Closing" onto a bulb seal strip
3. Increased closing cover angle for added weather protection
4. Larger blade gutter incorporated for extra storm-water dispersal



©Louvretec 2025 – All Rights Reserved. Technical specifications subject to change without notice
Revision to this page: 19/10/2026

MINIMUM - MAXIMUM BLADE SPANS AT A GLANCE AS DETERMINED BY WIND SPEED. REFER TO SECTION 13 ENGINEERING REPORTS FOR FULL DETAILS ON BLADE SPANS.

EXTRA HIGH WIND SPEED 198KM/H 55M/S

LOW WIND SPEED 115KM/H 32M/S

# THE LOUVRETEC RANGE OF OPENING ROOFS

## Award Winning Spiral Pivot System Opening Roofs & Retract Compatible Roofs

Spiral Pivot Opening Roofs pivot blades open & closed

louvretec retract — ADI Retract Technology

Retract Roofs pivot open & closed and also Retract back!

Louvretec Spiral Pivot Roofs are also available as a Solar Powered Option.

| TYPE/COLLECTION | LOUVRE BLADE STYLE | DRIVE SYSTEM | MAXIMUM SPANS |
|---|---|---|---|
| slimline opening roofs | 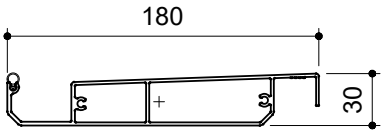 **Louvretec 180 opening slimline roof** | Spiral Pivot | 2850MM EX HIGH<br>4000MM LOW |
| | 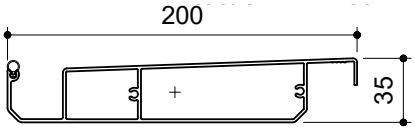 **Louvretec 200 opening slimline roof** | Spiral Pivot | 4000MM EX HIGH<br>4500MM LOW |
| | 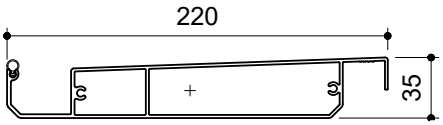 **Louvretec 220 opening slimline roof** (also retract roof compatible) | Spiral Pivot / Retract | 3500MM EX HIGH<br>4300MM LOW |
| | 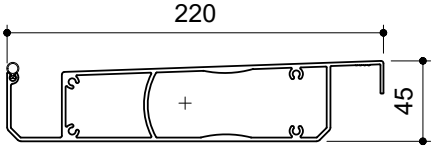 **Louvretec 220/45 opening alpine* roof** (also retract roof compatible)<br>*For larger spans, typically alpine and coastal locations | Spiral Pivot / Retract | 5000MM EX HIGH<br>5000MM LOW |
| suburban opening roof | 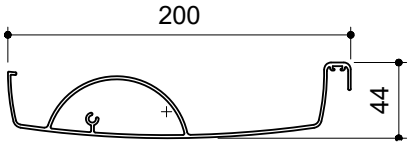 **Louvretec 200 opening suburban roof** | Spiral Pivot | 3300MM EX HIGH<br>4500MM LOW |
| translucent opening roof | 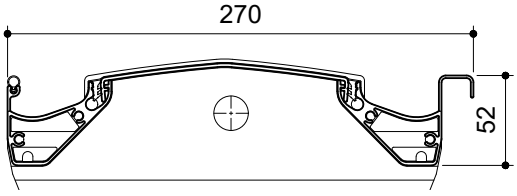 **Louvretec 270 opening translucent roof** | Spiral Pivot | 3250MM EX HIGH<br>4500MM LOW |

©Louvretec 2025 - All Rights Reserved. Technical specifications subject to change without notice.
Revision to this page: 19/10/2026

# DRIVE SYSTEMS

## Spiral Pivot - four variants

Hidden away, the award winning Spiral Pivot system is the very heart of Louvretec's operating system. Linked to a custom made gear box and driven by Somfy - the world's leading tubular motor manufacturer.

### 1. MOTOR OVER SPIRAL PIVOT

This tried and tested system has been well proven over many years and continues to be used as standard on Louvretec's 200 opening suburban roof.



MOTOR OVER SPIRAL PIVOT



### 2. DOWNUNDER SPIRAL PIVOT

With neither operating mechanism nor motor to be seen, Down-under provides for the cleanest look imaginable. Originally designed for Louvretec's new gen slimline roofs, Down-Under is now available on request for all Louvretec Opening Roofs. As the name implies, everything is hidden from sight: not only the pivot operating system, but the motor and gearbox too.

CONTROLLER OPTIONS
Refer Section 2 pages 2.17 - 2.18 for range of options.



DOWNUNDER SPIRAL PIVOT



### 3. SOLAR POWERED SPIRAL PIVOT

Louvretec now offers a Solar Powered option for all Opening Roofs.



SOLAR POWERED SPIRAL PIVOT



### 4. HAND OPERATED SPIRAL PIVOT

Using a custom engineered gearbox with stainless steel crank handle, all Louvretec Opening Roofs are available as a hand operable option in lieu of motorised.

The roofs can be operated with ease, with the crank handle being detachable for storage when operation is complete.



HAND OPERATED SPIRAL PIVOT



©Louvretec 2025 – All Rights Reserved. Technical specifications subject to change without notice.

# DETAILS AT A GLANCE

## Motor location

Ideally locate motor on high side, passive on low side. If due to down-pipe location or power source that the motor must be located on low side it is strongly recommended to use Motor Over option.

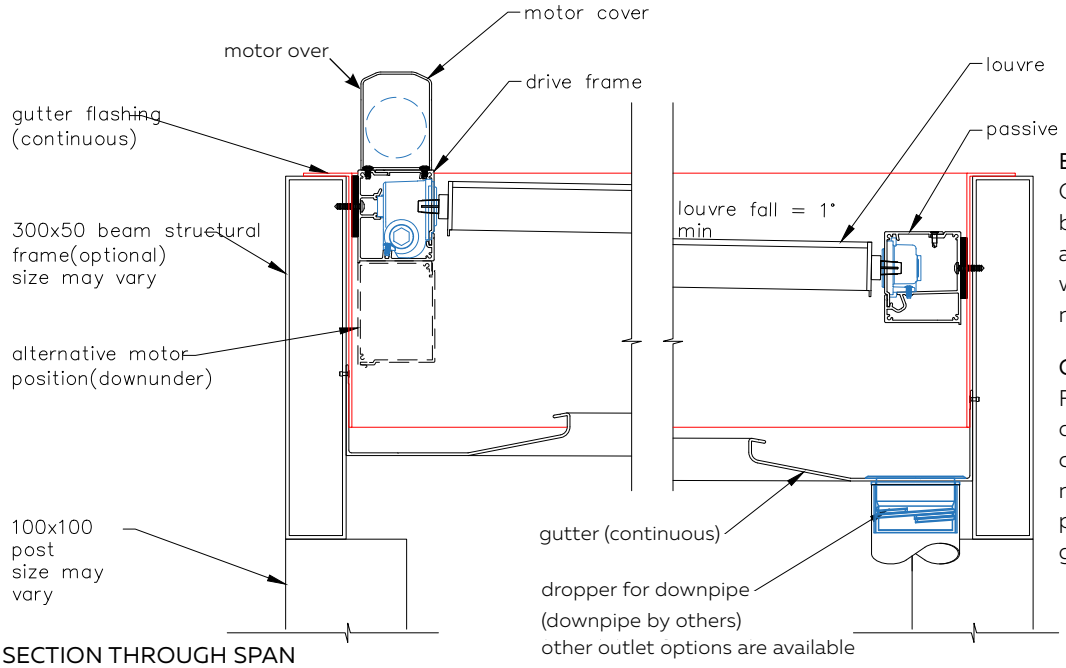


SECTION THROUGH SPAN

### BLADE FALL

Opening Roof louvre blades are installed at a minimum pitch of 1° which equals 17mm per metre.

### GUTTER FALL

Falls in gutters is determined by location of down-pipe outlet. A minimum fall of 3mm per metre is required for gutters.

### IN MOST INSTANCES STRUCTURAL OUTER FRAME IS INSTALLED LEVEL

This allows for ease of other installation options such as Louvre Panels, Slidetec Frameless Glass Sliding Doors or Outdoor Blinds.

## Clearance

When fixing under a soffit or overhead obstruction remember to check clearances above drive frame (or passive frame if passive is highest side). Check for motor cover and when opening roof blade is in vertical open position.

As a rule of thumb allow clearance of 100mm for all Opening Roofs excluding the Louvretec 270 opening translucent roof.

For the Louvretec 270 opening translucent roof, allow clearance of 120mm.

Exact clearances are shown on individual spec sheets in this Design Manual.

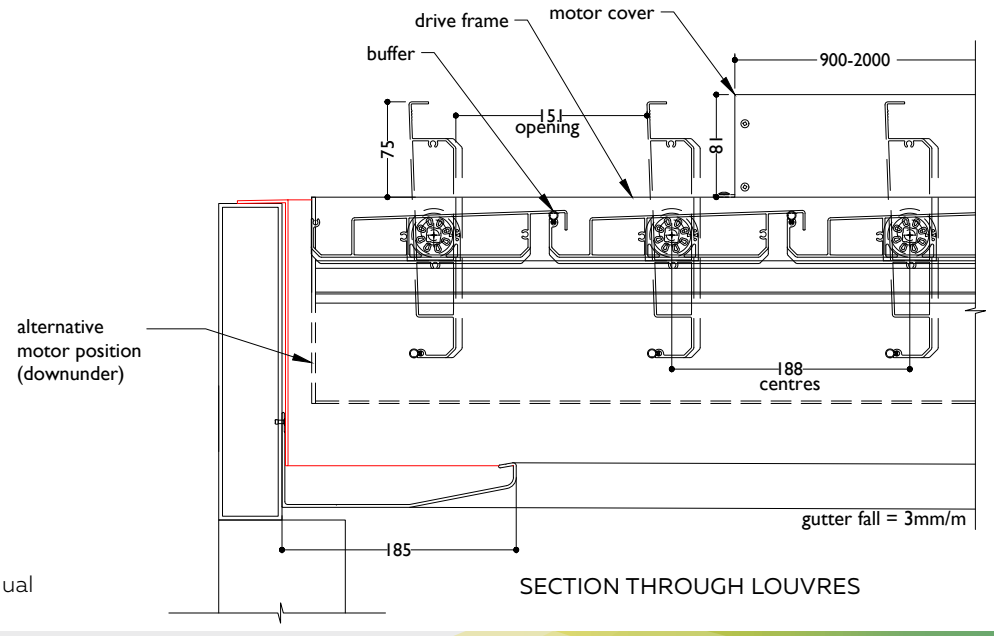


SECTION THROUGH LOUVRES

©Louvretec 2025 - All Rights Reserved. Technical specifications subject to change without notice.

# DETAILS AT A GLANCE

## Specifying direction of blade pivot

Determine which direction the Louvretec Spiral Pivot system opens the blades. Direction of left hand or right hand up is as viewed **when looking at the motor.**

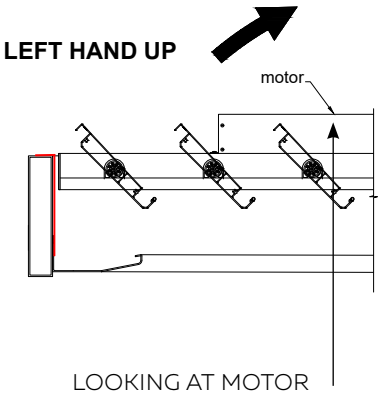


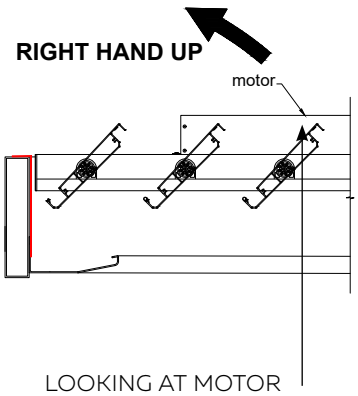




## DIFFERENT CONFIGURATIONS

The same rule applies - determine which direction the Louvretec Spiral Pivot system opens the blades. Direction of left hand or right hand up is as viewed **when looking at the motor.**

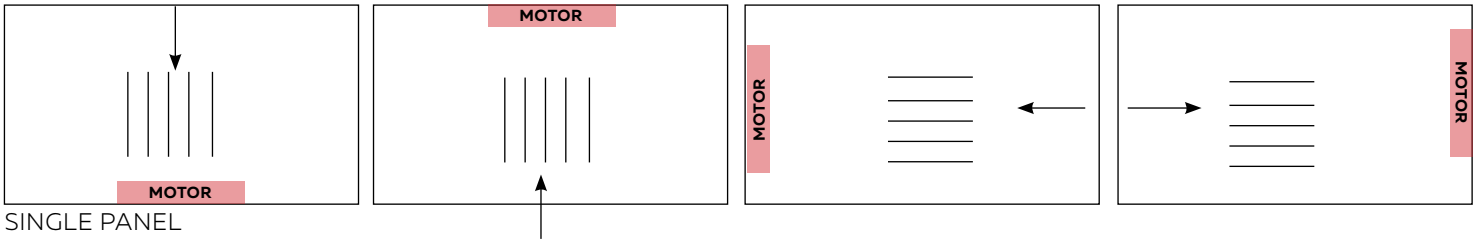


SINGLE PANEL

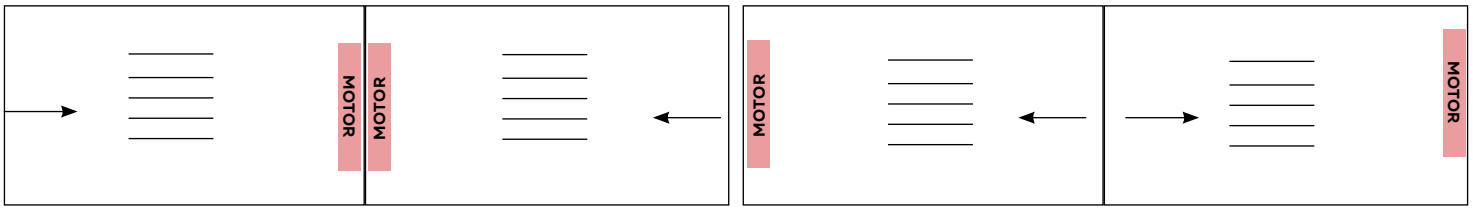


DOUBLE OR MULTIPLE PANELS

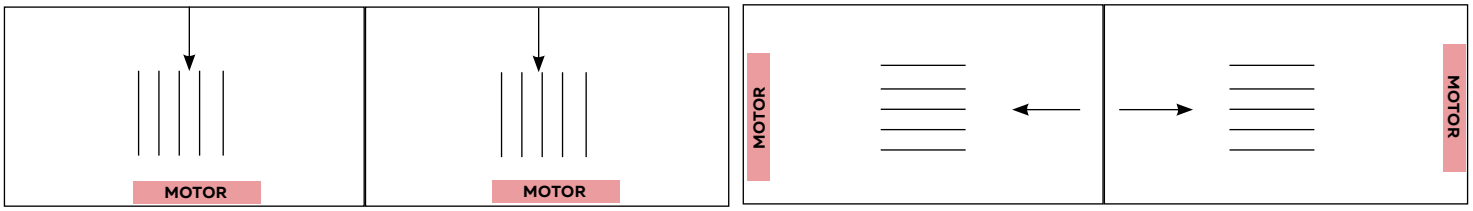


STANDARD OPTION

Motor Over is the Standard Option.

If Downunder is preferred specify as the Option.

ADD ON

Rain sensor available on all motorised Opening roofs - our most requested option.



©Louvretec 2025 – All Rights Reserved. Technical specifications subject to change without notice.



DURABILITY AT ITS BEST

# THE LOUVRETEC STRUCTURAL FRAME

## Post and Beam sizes determined by wind and loading

Refer to relevant design information for your project;
Section 13 | Engineering/Engineering Reports.

- The post and beam sizes are calculated and determined by wind speeds with loading factors applied to allow for uplift, down pressure and deflection.
- Please refer to Section 13 | Engineering for full engineering and design data.
- For any queries please contact your nearest Louvretec Dealer.



DESIGNED FOR COASTAL LIVING



FREE STANDING OPTION SHOWN




BEAM SIZES

©Louvretec 2025 – All Rights Reserved. Technical specifications subject to change without notice.

# THE LOUVRETEC STRUCTURAL FRAME

## Engineered aluminium frame for Opening Roofs



- Louvretec offers a fully engineered Structural Aluminium Frame system designed specifically for Opening Roofs and Outdoor Rooms.
- Beams and posts are custom designed to be structurally compliant to the specific wind zone.
- Louvretec Structural Frames provide for clean, aesthetically pleasing lines and with regular cleaning, are virtually maintenance free.
- Louvretec Structural Frames can incorporate wall infills such as Outdoor Blinds, Slidetec Frameless Glass Sliding Doors as well as a range of Louvre Panel infills.
- REFER TO SECTION 4: LOUVRETEC STRUCTRUAL FRAME FOR MORE INFO

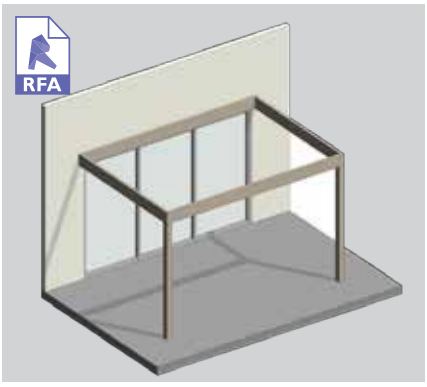


SIMPLY SUPPORTED

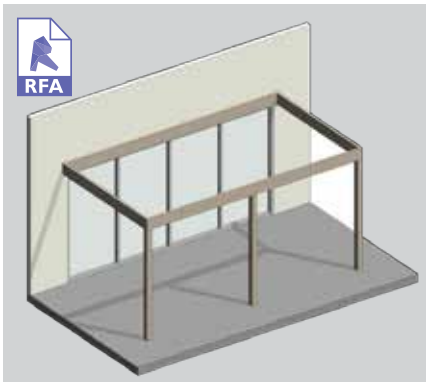


LENGTH EXTENDED - CONTINUOUS SPAN

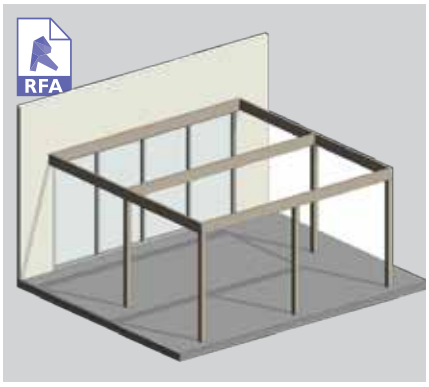


WIDTH EXTENDED

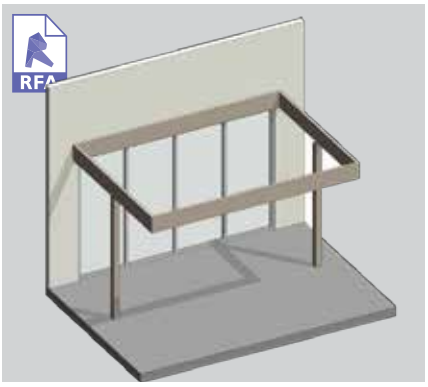


CANTILEVERED FRAME

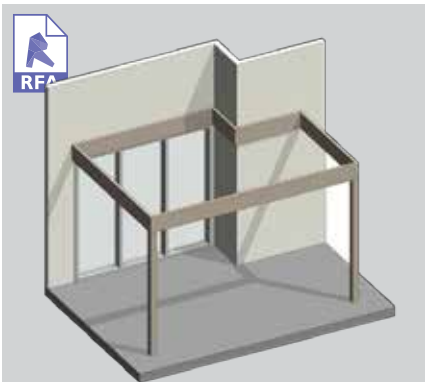


STEPPED FRAME

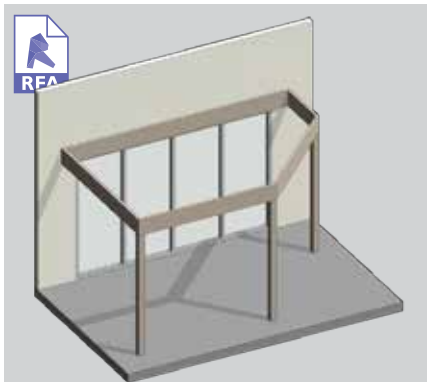


RAKING FRAME



**Louvretec 180 opening slimline roof**
PG 2.19



**Louvretec 200 opening slimline roof**
PG 2.23



**Louvretec 220 opening slimline roof**
(Retract Compatible)
PG 2.27



**Louvretec 220/45 opening alpine* roof**
*For larger spans, typically alpine and coastal locaitons
(Retract Compatible) PG 2.31



**Louvretec 200 suburban opening roof**
PG 2.35
**& Suburban Solar** PG 2.14

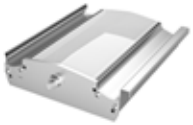

**Louvretec 270 opening translucent roof**
PG 2.39



©Louvretec 2025 – All Rights Reserved. Technical specifications subject to change without notice.



PLAN VIEW

# OPENING ROOFS - RAKING FRAMES

## Customised outdoor spaces

No matter the shape, a Louvretec Raking Opening Roof can be designed to fit to any angle up to 45°.

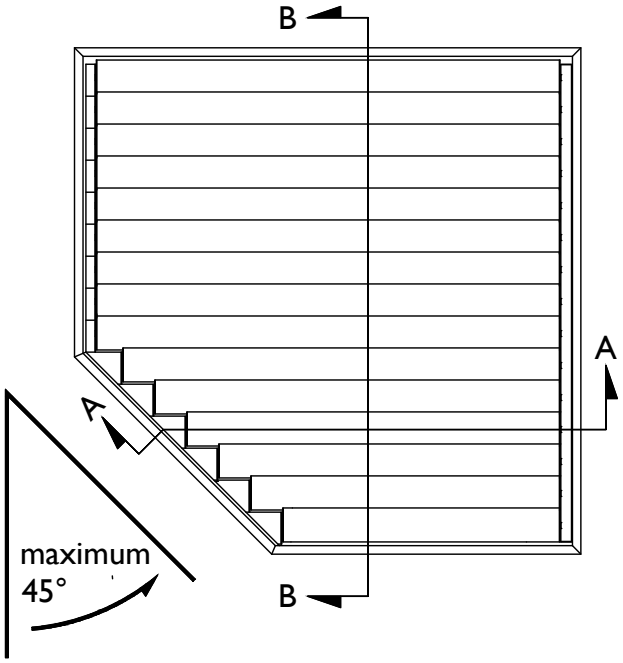




RAKING ROOF

©Louvretec 2025 – All Rights Reserved. Technical specifications subject to change without notice.

# OFF THE GRID

## Solar Powered Spiral Pivot Opening Roofs
## New Technology

LouvreTec Green

Using the very latest solar energy technology, Louvretec introduces our first solar powered Opening Roof option.

No power connection required, the quiet solar powered motor can be controlled by a wireless handheld remote or by a Smart Home solution.

Incorporated within the solar panel is a powerful battery with a 45-day life cycle based on two open/close cycles per day.

Specific algorithms for power management allow for battery charging without direct sunlight.

Innovative, efficient, clean & quiet - presenting Louvretec Solar.



SOLAR POWERED OPENING ROOF



FREESTANDING, SOLAR POWERED OPENING ROOF



©Louvretec 2025 – All Rights Reserved. Technical specifications subject to change without notice.

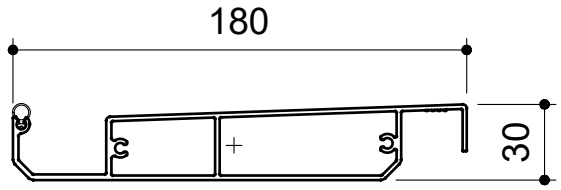


Louvretec 180 opening slimline roof

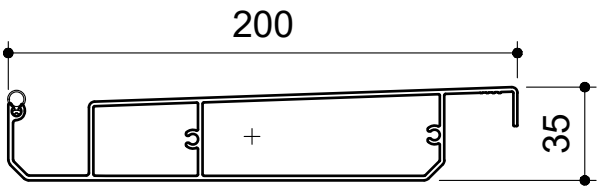


Louvretec 200 opening slimline roof

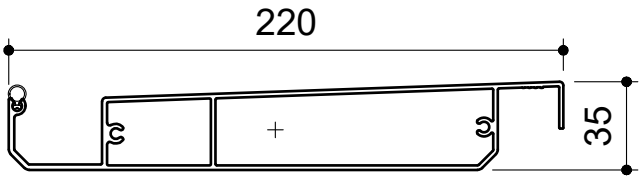


Louvretec 220 opening slimline roof
(Retract compatible)

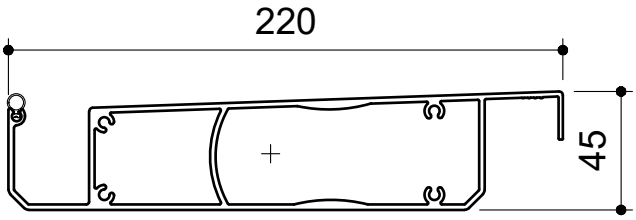


Louvretec 220/45 opening alpine* roof
*For larger spans, typically alpine and coastal locations
(Retract compatible)

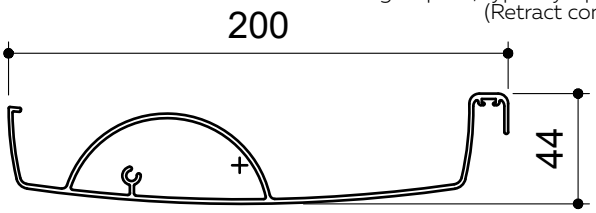


Louvretec 200 opening suburban roof

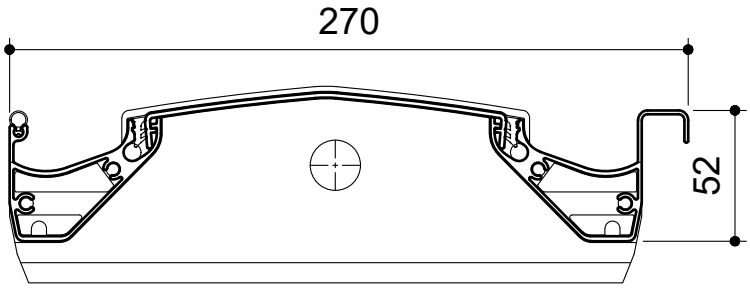


Louvretec 270 opening translucent roof

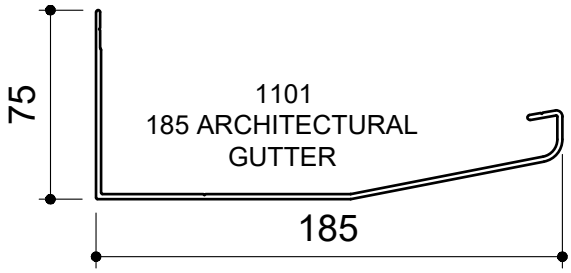


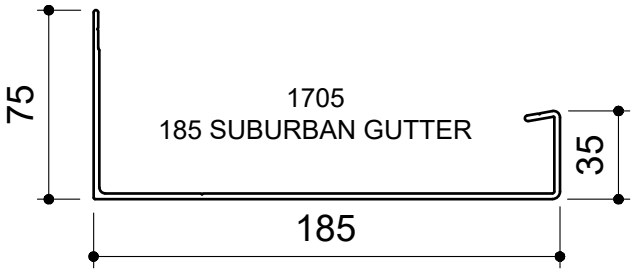


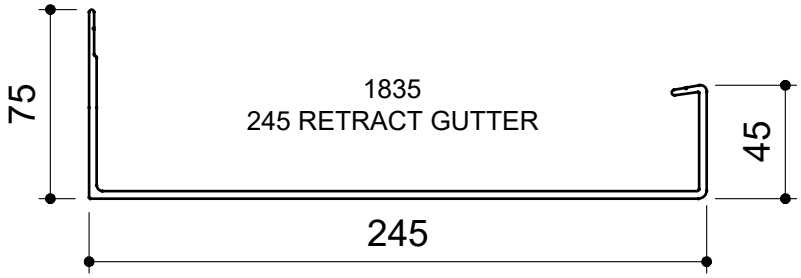



©Louvretec 2025 – All Rights Reserved. Technical specifications subject to change without notice.

## TYPICAL DETAIL : LOUVRETEC RANGE OF BOX SECTION FRAMES, POSTS & FLASHING

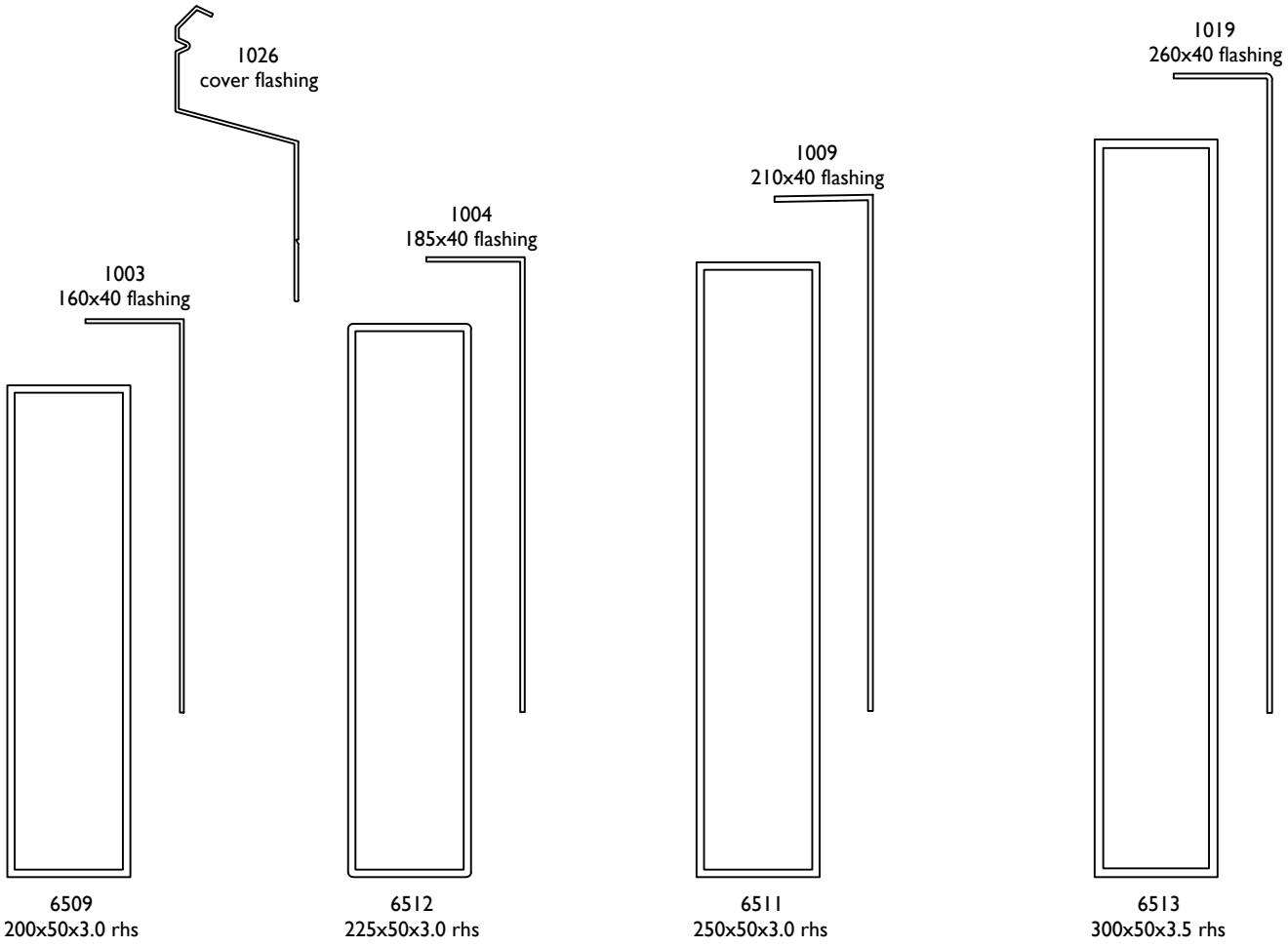





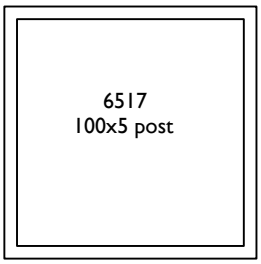


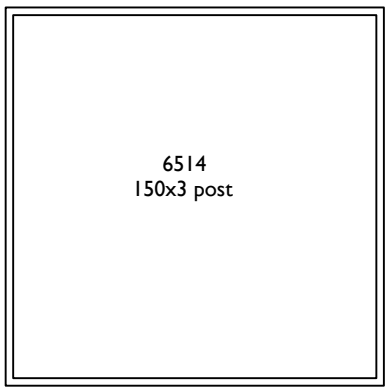


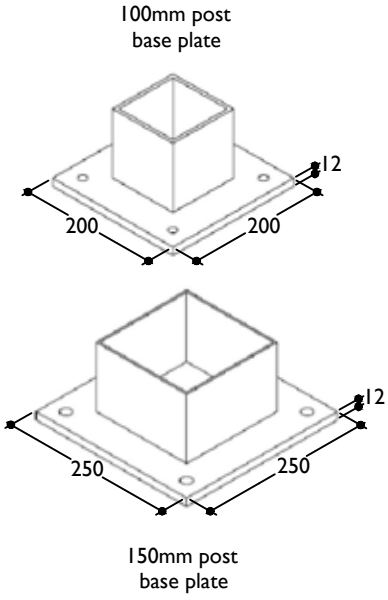




FILE: OPENING ROOFS 2.16 DATE MODIFIED: 01/10/2024 SCALE:

www.louvretec.co.nz www.louvretec.com.au

©Louvretec 2025 – All Rights Reserved. Technical specifications subject to change without notice.

Key: Remote Compatibility

opening roofs — outdoor blinds
louvretec retract — Lighting
sun louvres — Heating

# REMOTE CONTROL OPTIONS FOR OPENING ROOFS & OTHER LOUVRETEC MOTORISED PRODUCTS

## Remote options

Louvretec's Remote Control options can manage a single Opening Roof or up to 16 Motorised Louvretec products. Remote Control technology is constantly changing and upgrading. Please discuss with your Dealer.

### Situo 1 & Smoove 1 Wall Switch

The Situo 1 Remote by Somfy is a one-channel handheld remote using Radio Technology Somfy (RTS).
Smoove is a wireless wall mounted switch providing the same functionality as a remote.
Perfect for controlling a single Opening Roof.



### Situo 5 & Smoove 4 Wall Switch

The Situo 5 by Somfy is a five-channel handheld remote using Radio Technology Somfy (RTS). Perfect for controlling a group of motorised Louvretec products (excluding the Retract Roof).
Smoove 4 is a wireless wall switch providing the same functionality as a remote but with 4 channels.
With the addition of the BST11 Bridge, both remotes can control Lighting and Heating.



### Telis 16

The Telis 16 is a 16-channel handheld remote using Radio Technology Somfy (RTS). Made to control a larger group of motorised Louvretec products (excluding the Retract Roof).
The addition of a BST 11 Bridge allows this remote to control Lighting & Heating.



### Noon Duo

The Noon Duo is a 9-channel handheld remote.
The Noon Duo allows control for Louvretec Retract Roofs, Lighting and Heating.



### Daisy App

Daisy is an app by Teleco that allows the control of Louvretec Retract Roofs, Lighting and Heating. Download the free app and install a Daisy Box which communicates with your devices via radio signal.




### Solar Powered

No power connection required, the solar powered motor can be controlled by a wireless handheld remote or a Smart Home solution. Battery has a 45-day life cycle based on two open/close cycles/ day. Algorithms for power management allow for battery charging without direct sunlight.



SOLAR POWER OPTION FOR SPIRAL PIVOT OPENING ROOFS

©Louvretec 2025 – All Rights Reserved. Technical specifications subject to change without notice.

# REMOTE CONTROL OPTIONS FOR OPENING ROOFS & OTHER LOUVRETEC MOTORISED PRODUCTS

## Remote options

Hard Wired Switch options are available for your Motorised Opening Roofs & other Motorised Louvretec products.

Key: Remote Compatibility

opening roofs By Louvretec
outdoor blinds By Louvretec
louvretec retract ADI Retract Technology
Lighting
sun louvres By Louvretec
Heating

| | |
|---|---|
| **Connexoon**<br>Connexoon is an app by Somfy that allows the control of Louvretec Opening Roofs from your device. The addition of a BST 11 Bridge also allows control of Louvretec Lighting & Heating. Download the app & install the RTS Box (plugs in to your router & wall socket) which communicates with your devices via signal. | <br>BST 11 BRIDGE & CONNEXOON APP BY SOMFY |
| **TaHoma**<br>Tahoma by Somfy is the central hub that connects and controls the smart home ecosystem. Convenient, intuitive & easy to configure across a wide range of smart home systems. | <br>TAHOMA CENTRAL HUB |
| **BMS**<br>A Building Management System (BMS) is a pad from which you can manage a home's shading, heating, cooling, ventilation & lighting controls. Louvretec Opening Roofs can be integrated into a home or building's BMS. Retract Roof, Heating & Lighting can be integrated via an RS232 Transmitter. |  <br>BUILDING MANAGEMENT SYSTEM (BMS) |
| **Hard Wired Switch**<br>A Somfy Hard Wired Switch provides control of a motorised Opening Roof via a 230v wall switch wired directly to the motor. | <br>SOMFY SWITCH<br>FOR AN OPENING ROOF |
| **Wall Mounted Remote**<br>A Teleco Wall Mounted Remote provides control of a single Retract Roof, LED Lights, or a Dimmable Heater. | <br>TELECO WALL MOUNTED REMOTE<br>FOR A RETRACT ROOF |

# RAIN SENSOR OPTION

## Teleco Wired Rain102H

The Rain102H by Teleco Rain Sensor can be programmed to automatically close the Louvres & includes integrated heating function for preventing false activation in case of ice and snow.


TELECO RAIN SENSOR


©Louvretec 2025 – All Rights Reserved. Technical specifications subject to change without notice.





PURPOSE BUILT OUTDOOR LIVING AREA
BY LOUVRETEC AUCKLAND

# Louvretec 180 opening slimline* roof

**Sleek and compact. The smallest Roof in the slimline series*

## Compact. Capable. Mighty

The modern slimline design works so well with the narrower 180mm wide louvre blade, and is an ideal choice for smaller spanning Opening Roofs.

## Key Features

- Each blade top tapers to a height of 30mm
- Sleek, functional design, clean and uncluttered when open or closed
- Design strength of an extruded double box-section
- Available Motorised using Somfy Motorisation, or hand-operated
- Features our award winning Spiral Pivot drive system, keeping mechanisms hidden
- "Cushion Closing" onto a bulb seal strip
- Increased closing cover angle for added weather protection
- Larger blade gutter incorporated for extra storm-water dispersal
- This Roof replaces the original 180 Classic and 180 Linear Opening Roofs



Louvretec 180 opening slimline roof `blade



Louvretec 180
opening slimline roof
BLADES CLOSED



Louvretec 180
opening slimline roof
BLADES OPENING

MOTORISED OR HAND OPERATED
Controller and
Sensor Options
Refer Pages
2.17 - 2.18
for range of options





SURFACE FINISHING OPTIONS
A wide range of options are available.

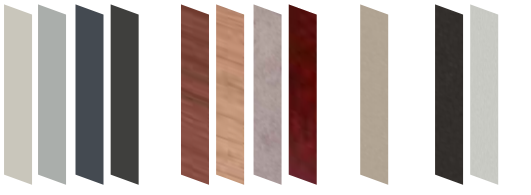

POWDERCOAT | WOODGRAIN & SPECIAL FINISHES | METALLIC | ANODISED

©Louvretec 2025 - All Rights Reserved. Technical specifications subject to change without notice.



## BLADE SPECIFICATIONS Louvretec 180 opening slimline roof blade

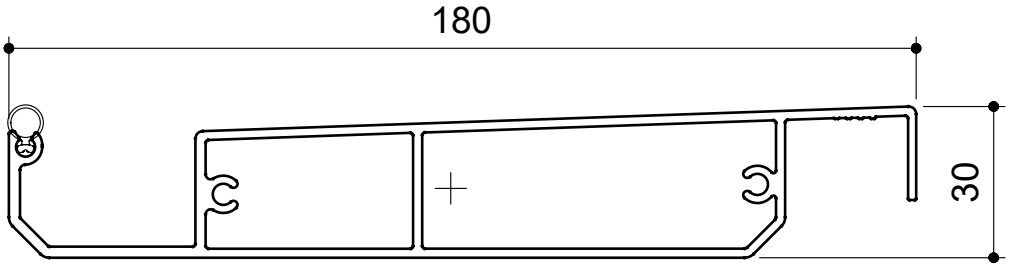


NTS

| BLADE SPECIFICATIONS | | | |
|---|---|---|---|
| Blade cover - opening system | 169 mm | Weight per linear metre - opening system | 1.93 kg/lm |
| Weight per square metre - opening system | 11.41 kg/sqm | Actual blade width | 180 mm |
| Blade centres - opening system | 169 mm | | |

### SPANS AT A GLANCE

Refer Engineering Section. Climate, terrain, shielding, location, type of structure contribute to determine spans.

| WIND ZONE | INSIDE | LOW | MEDIUM | HIGH | VERY HIGH | EXTRA HIGH |
|---|---|---|---|---|---|---|
| Factored wind speed at building | Self wt | 32 m/s | 37m/s | 44 m/s | 50 m/s | 55 m/s |
| | | 115 km/hr | 133 km/hr | 158 km/hr | 179 km/hr | 198 km/hr |
| Louvretec 180 opening slimline roof **3m Height** | 4500 | 4000 | 4000 | 3750 | 3200 | 2850 |
| Louvretec 180 opening slimline roof **6m Height** | | 4000 | 4000 | 3300 | 2800 | 2500 |

### INSTALLATION OPTIONS

### CALCULATE OPTIMUM FRAME OPENING SIZES FOR SPIRAL PIVOT

**Span:** Check engineering span limits

**Pivot:** Calculation example showing 17 blades

STEP 1

| | |
|---|---|
| 16 blades x 169 Crs | 2704 |
| 1 blade at 180 (blade size) | + 180 |
| 17 blades | =2884 |

STEP 2

| | |
|---|---|
| Blade cover | 2884 |
| +2/22mm clearance @ ends | =44 |
| Total exact pivot length | =2928 |

Extra width 185mm gutter provides cover if clearance increases over 22mm at ends.

Blade direction either Right Hand up or Left Hand up.

### CHOOSE DIRECTION OF BLADE PIVOT

LEFT HAND UP

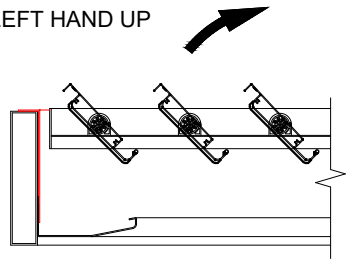

RIGHT HAND UP

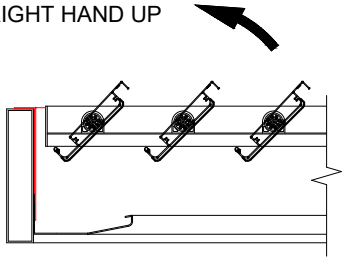



©Louvretec 2025 – All Rights Reserved. Technical specifications subject to change without notice.
Revision to this page: 20/10/2026

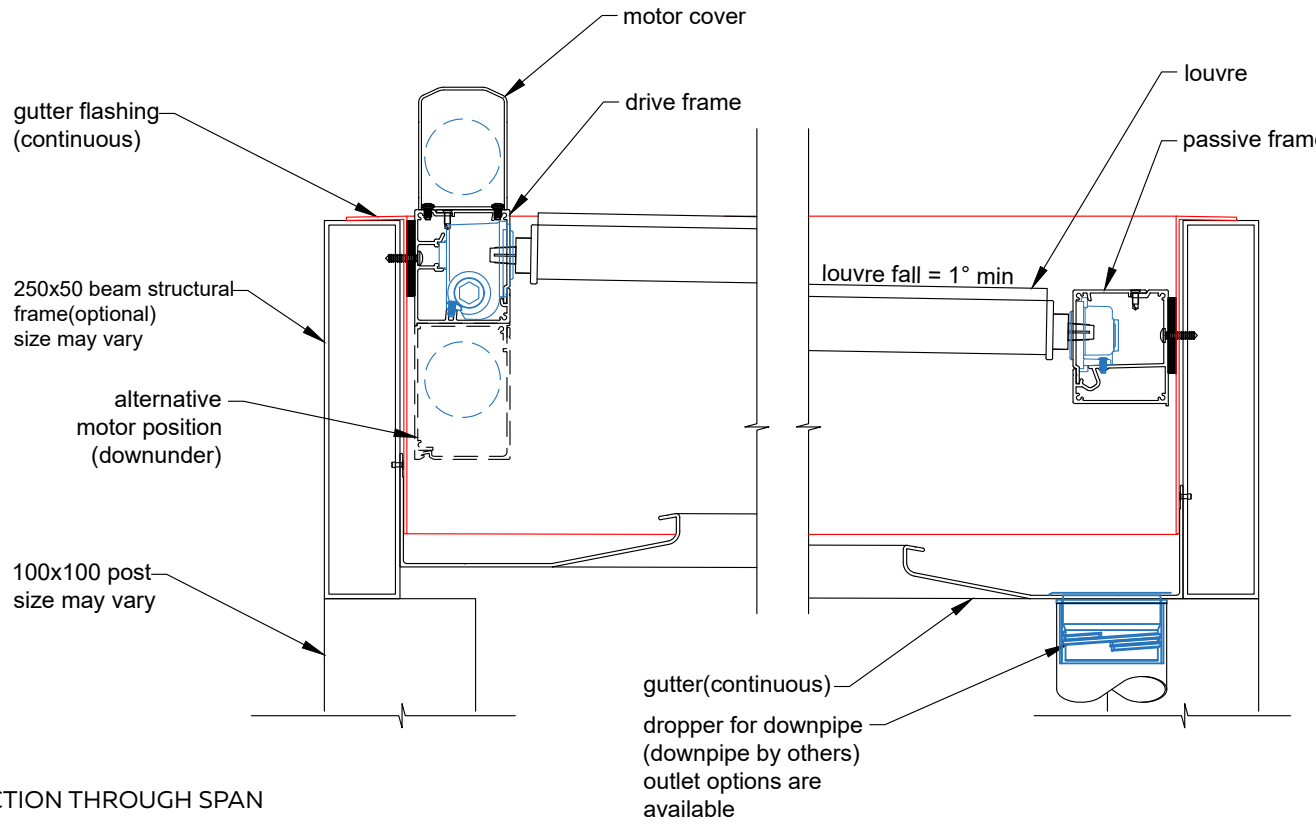


SECTION THROUGH SPAN

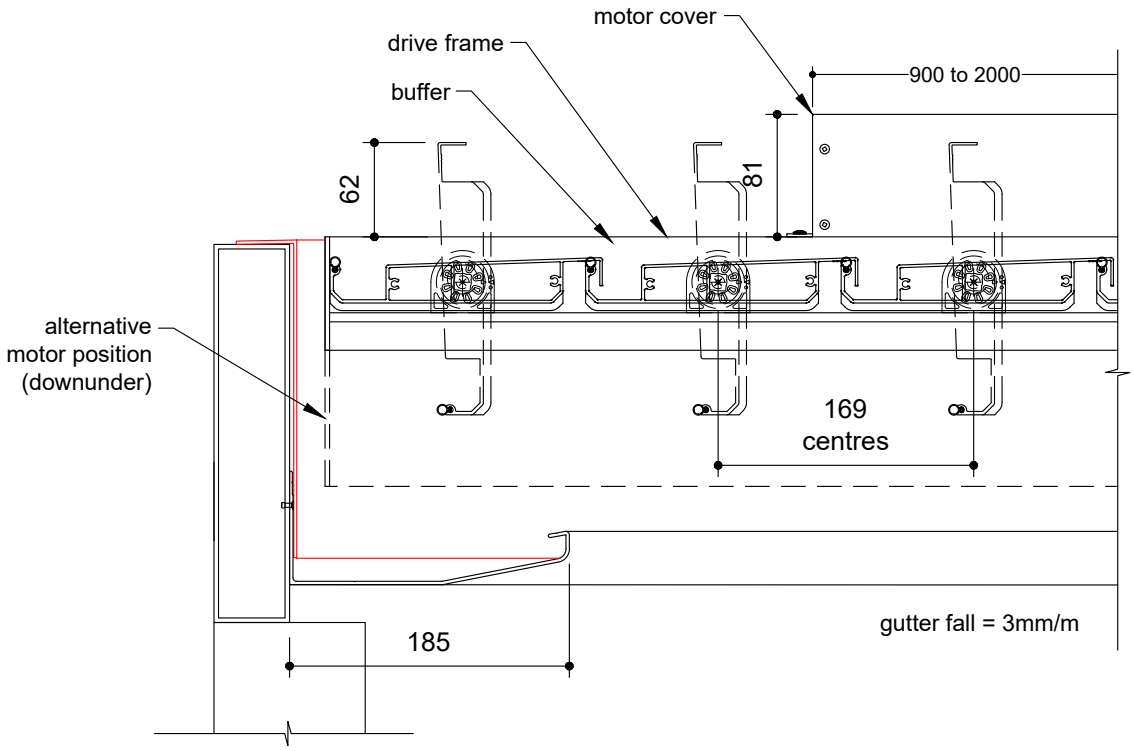


SECTION THROUGH LOUVRES


©Louvretec 2025 – All Rights Reserved. Technical specifications subject to change without notice.

**TYPICAL DETAIL : Manual Louvretec 180 opening slimline roof within Louvretec structural frame**

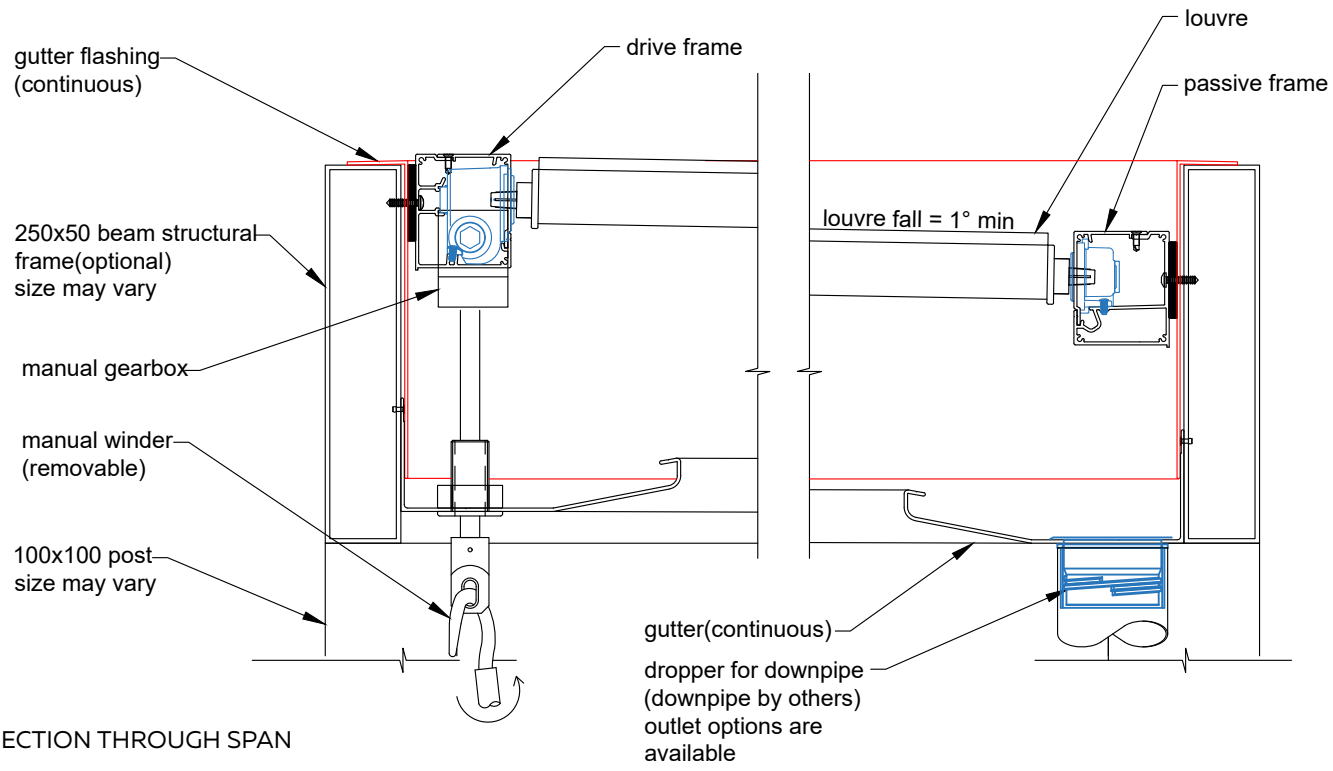


SECTION THROUGH SPAN

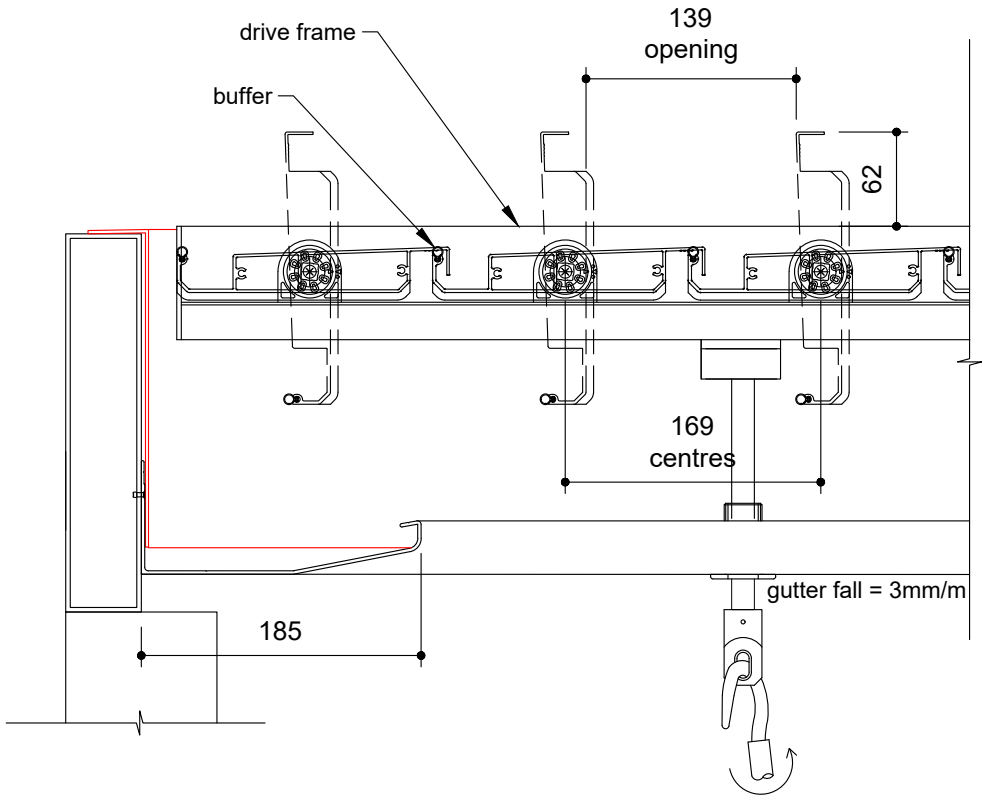


SECTION THROUGH LOUVRES



FILE: OPENING ROOFS 2.22 DATE MODIFIED: 01/10/2026 SCALE:

www.louvretec.co.nz www.louvretec.com.au

©Louvretec 2025 - All Rights Reserved. Technical specifications subject to change without notice.





CONTROLLABLE OUTDOOR LIVING SPACE CREATION. BY LOUVRETEC AUCKLAND

# **Louvretec** 200 **opening slimline*** **roof**

**An ideal all-rounder option. Each blade top-tapers to 35mm high*

## A Handy 200mm wide Opening Roof Louvre Blade

Since its release, the Louvretec 200 opening slimline roof is a popular option that features a 200mm wide design.

The sleek, clean modern design provides excellent spanning capacity for the majority of residential installations.

## Key Features

- Each blade is 35mm high at it's highest point
- Sleek, functional design, clean and uncluttered when open or closed
- Design strength of an extruded double box-section
- Available Motorised using Somfy Motorisation, or hand-operated
- Features our award winning Spiral Pivot drive system, keeping mechanisms hidden
- "Cushion Closing" onto an external sun-resistant PVC bulb seal
- Increased closing cover angle for added weather protection
- Larger blade gutter incorporated for extra stormwater dispersal



Louvretec 200 opening slimline roof `blade



Louvretec 200 opening slimline roof BLADES CLOSED



Louvretec 200 opening slimline roof BLADES OPENING

MOTORISED OR HAND OPERATED

Controller and Sensor Options Refer Pages 2.17 - 2.18 for range of options





SURFACE FINISHING OPTIONS

A wide range of options are available.

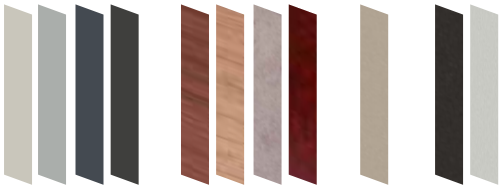

POWDERCOAT | WOODGRAIN & SPECIAL FINISHES | METALLIC | ANODISED

©Louvretec 2025 - All Rights Reserved. Technical specifications subject to change without notice.



## BLADE SPECIFICATIONS Louvretec 200 opening slimline roof blade

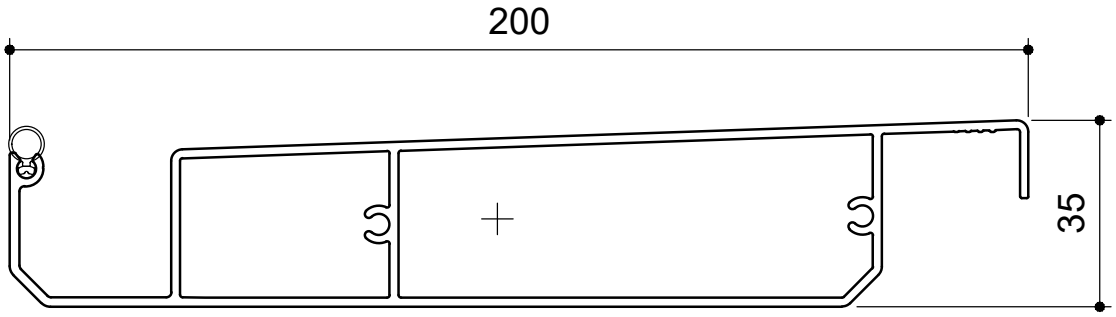


NTS

| BLADE SPECIFICATIONS | | | |
|---|---|---|---|
| Blade cover - opening system | 188 mm | Weight per linear metre - opening system | 2.431 kg/lm |
| Weight per square metre - opening system | 12.9 kg/sqm | Actual blade width | 200 mm |
| Blade centres - opening system | 188 mm | | |

### SPANS AT A GLANCE

Refer Engineering Section. Climate, terrain, shielding, location, type of structure contribute to determine spans.

| WIND ZONE | INSIDE | LOW | MEDIUM | HIGH | VERY HIGH | EXTRA HIGH |
|---|---|---|---|---|---|---|
| Factored wind speed at building | Self wt | 32 m/s | 37m/s | 44 m/s | 50 m/s | 55 m/s |
| | | 115km/hr | 133 km/hr | 158 km/hr | 179 km/hr | 198 km/hr |
| Louvretec 200 opening slimline roof **3m Height** | 4500 | 4500 | 4500 | 4500 | 4300 | 4000 |
| Louvretec 200 opening slimline roof **6m Height** | | 4500 | 4500 | 4400 | 4000 | 3800 |

### INSTALLATION OPTIONS

### CALCULATE OPTIMUM FRAME OPENING SIZES FOR SPIRAL PIVOT

**Span:** Check engineering span limits

**Pivot:** Calculation example showing 17 blades

STEP 1

| | |
|---|---|
| 16 blades x 188 Crs | 3008 |
| 1 blade at 200 (blade size) | + 200 |
| 17 blades | =3208 |

STEP 2

| | |
|---|---|
| Blade cover | 3208 |
| +2/22mm clearance @ ends | + 44 |
| Total exact pivot length | = 3252 |

Extra width 185mm gutter provides cover if clearance increases over 22mm at ends.

Blade direction either Right Hand up or Left Hand up.

### CHOOSE DIRECTION OF BLADE PIVOT

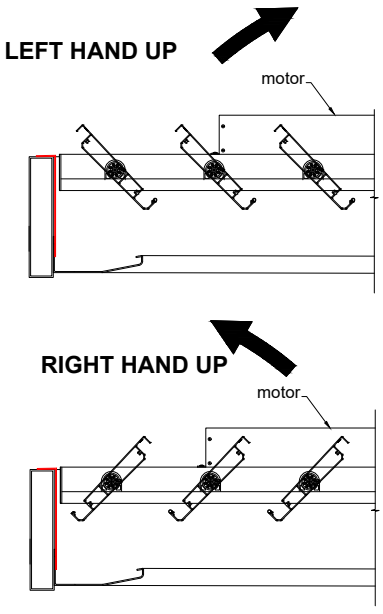




©Louvretec 2025 – All Rights Reserved. Technical specifications subject to change without notice.

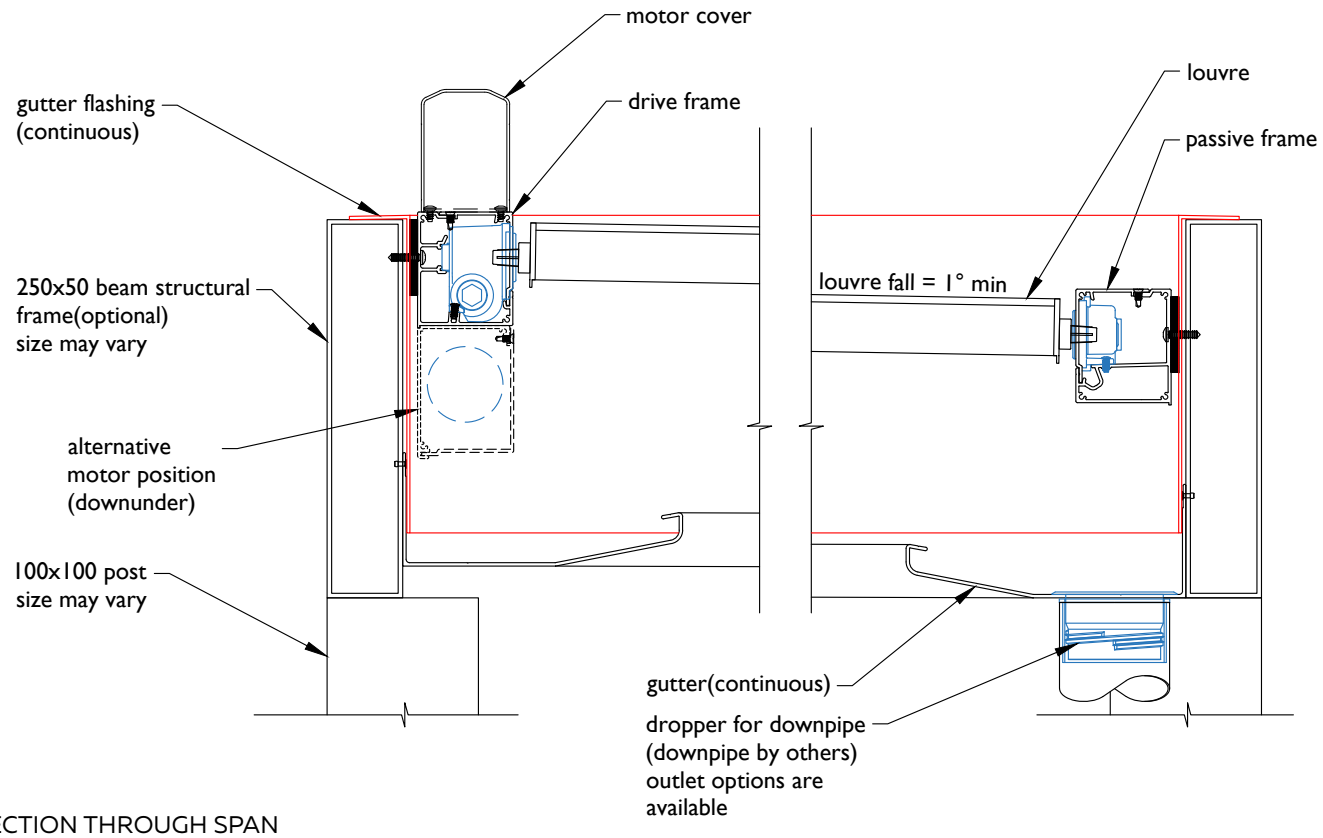


SECTION THROUGH SPAN

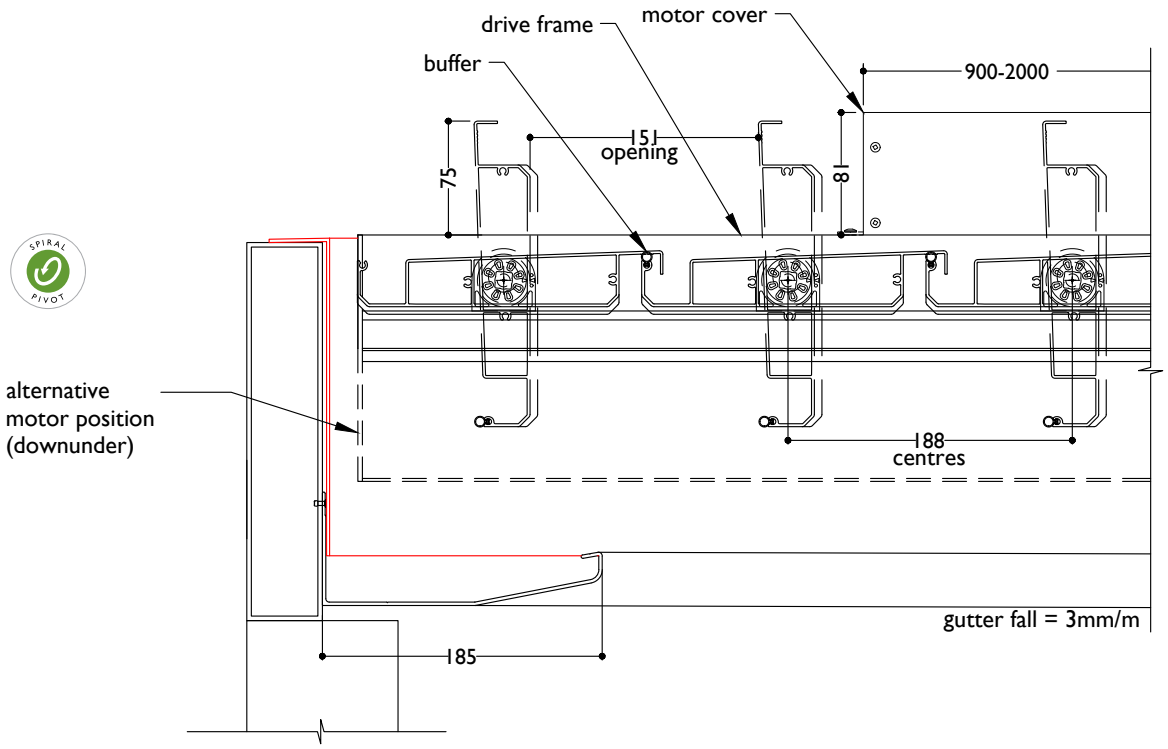


SECTION THROUGH LOUVRES


©Louvretec 2025 – All Rights Reserved. Technical specifications subject to change without notice.

## TYPICAL DETAIL : Manual Louvretec 200 opening slimline roof within Louvretec structural frame

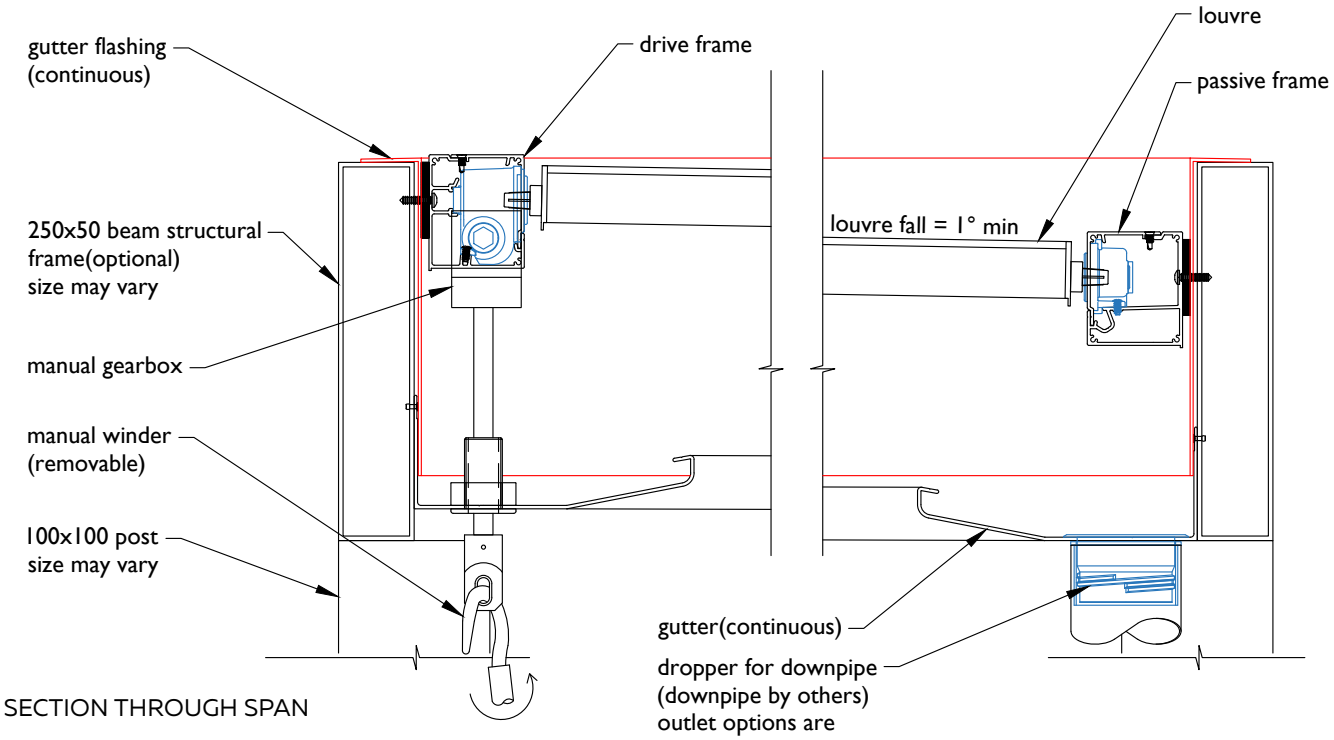


SECTION THROUGH SPAN

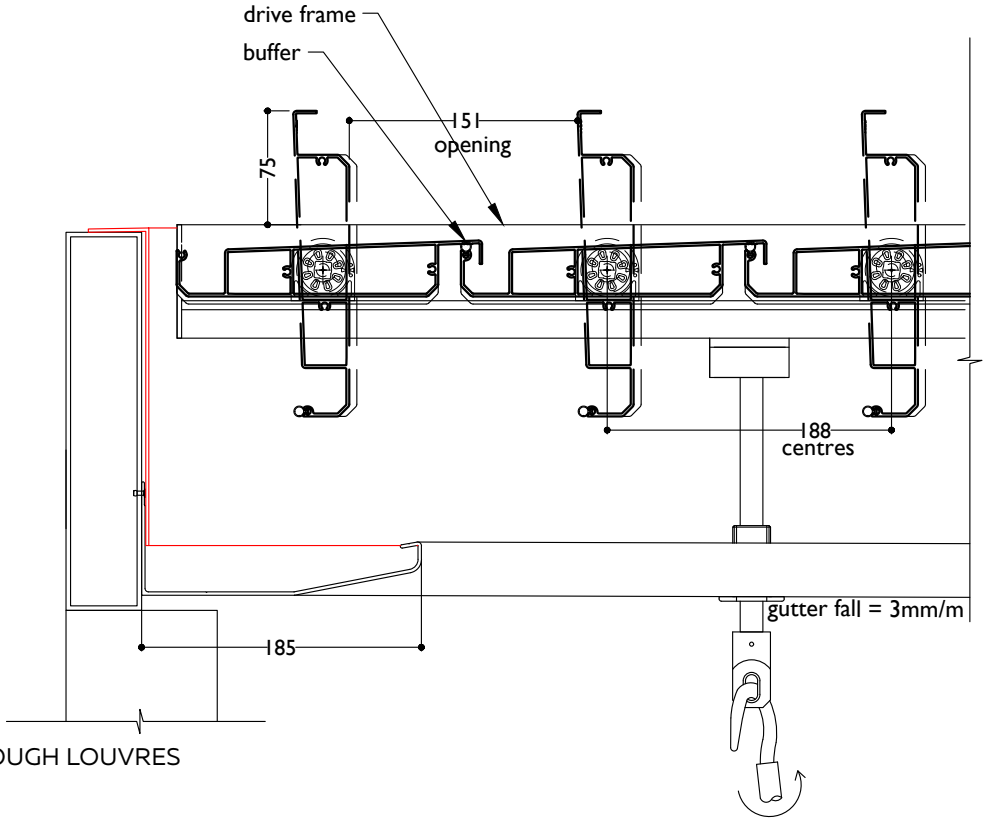


SECTION THROUGH LOUVRES



FILE: OPENING ROOFS 2.26 DATE MODIFIED: 01/10/2026 SCALE:

www.louvretec.co.nz www.louvretec.com.au

©Louvretec 2025 - All Rights Reserved. Technical specifications subject to change without notice.





EXTEND & ENJOY OUTDOOR LIVING.
BY LOUVRETEC SYDNEY NORTH

# Louvretec 220 opening slimline* roof

**Each blade top-tapers to 35mm high. Retract Roof compatible.*

## A Multi-purpose Louvre blade compatible as a Spiral Pivot or Retract Roof.

## Perfect for most Installations

The multi-purpose Louvretec 220 opening slimline roof is one of our most specified roofs, due to it's versatility. This louvre blade is compatible as a Spiral Pivot Opening Roof, as well as a Retract Roof, with excellent spanning capabilities.

## Key Features

- Sleek, functional design, clean and uncluttered when open or closed
- Design strength of an extruded double box-section
- Blade is compatible as a Spiral Pivot or Retract Roof
- Available motorised using Somfy Motorisation, or hand-operated
- Award winning Spiral Pivot drive system, keeps mechanisms hidden
- "Cushion Closing" onto an external sun-resistant PVC bulb seal
- Increased closing cover angle for added weather protection
- Larger blade gutter incorporated for extra stormwater dispersal



Louvretec 220 opening slimline roof blade

Available Spiral Pivot or Retract

SPIRAL PIVOT

RETRACT



Louvretec 220
opening slimline roof
BLADES CLOSED



Louvretec 220
opening slimline roof
BLADES OPENING

MOTORISED OR HAND OPERATED

Controller and
Sensor Options
Refer Pages
2.17 - 2.18
for range of options





SURFACE FINISHING OPTIONS

A wide range of options are available.

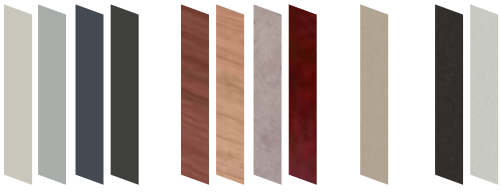

POWDERCOAT | WOODGRAIN & SPECIAL FINISHES | METALLIC | ANODISED

©Louvretec 2025 - All Rights Reserved. Technical specifications subject to change without notice.



## BLADE SPECIFICATIONS Louvretec 220 opening slimline roof blade (Retract compatible)

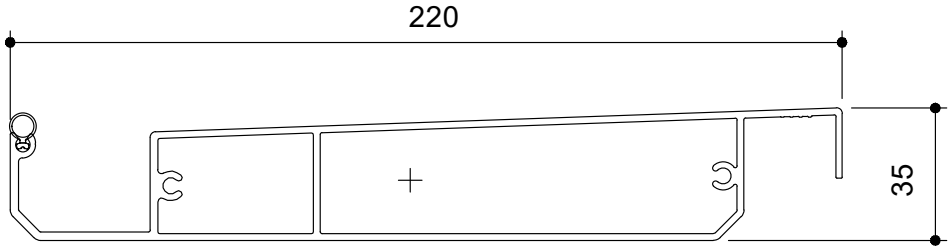


NTS

| BLADE SPECIFICATIONS | | | |
|---|---|---|---|
| Blade cover - opening system | 205 mm | Weight per linear metre - opening system | 2.655 kg/lm |
| Weight per square metre - opening system | 12.9 kg/sqm | Actual blade width | 220 mm |
| Blade centres - opening system | 205 mm | | |

### SPANS AT A GLANCE

Refer Engineering Section. Climate, terrain, shielding, location, type of structure contribute to determine spans.

| WIND ZONE | INSIDE | LOW | MEDIUM | HIGH | VERY HIGH | EXTRA HIGH |
|---|---|---|---|---|---|---|
| Factored wind speed at building | Self wt | 32 m/s | 37m/s | 44 m/s | 50 m/s | 55 m/s |
| | | 115 km/hr | 133 km/hr | 158 km/hr | 179 km/hr | 198 km/hr |
| Louvretec 220 opening slimline roof **3m Height** | 4300 | 4300 | 4300 | 4200 | 4000 | 3500 |
| Louvretec 220 opening slimline roof **6m Height** | | 4300 | 4300 | 4050 | 3500 | 3150 |

### INSTALLATION OPTIONS

CALCULATE OPTIMUM FRAME OPENING SIZES FOR SPIRAL PIVOT

**Span:** Check engineering span limits

**Pivot:** Calculation example showing 17 blades

STEP 1

| | |
|---|---|
| 16 blades x 205 Crs | 3280 |
| 1 blade at 220 (blade size) | + 220 |
| 17 blades | =3500 |

STEP 2

| | |
|---|---|
| Blade cover | 3500 |
| +2/22mm clearance @ ends | =44 |
| Total exact pivot length | =3544 |

Extra width 185mm gutter provides cover if clearance increases over 22mm at ends.

Blade direction either Right Hand up or Left Hand up.

### CHOOSE DIRECTION OF BLADE PIVOT

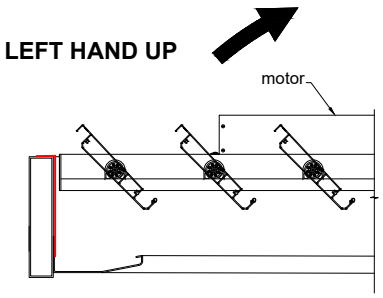


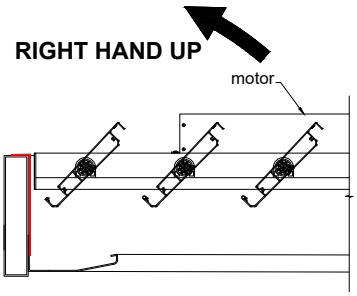




©Louvretec 2025 – All Rights Reserved. Technical specifications subject to change without notice.

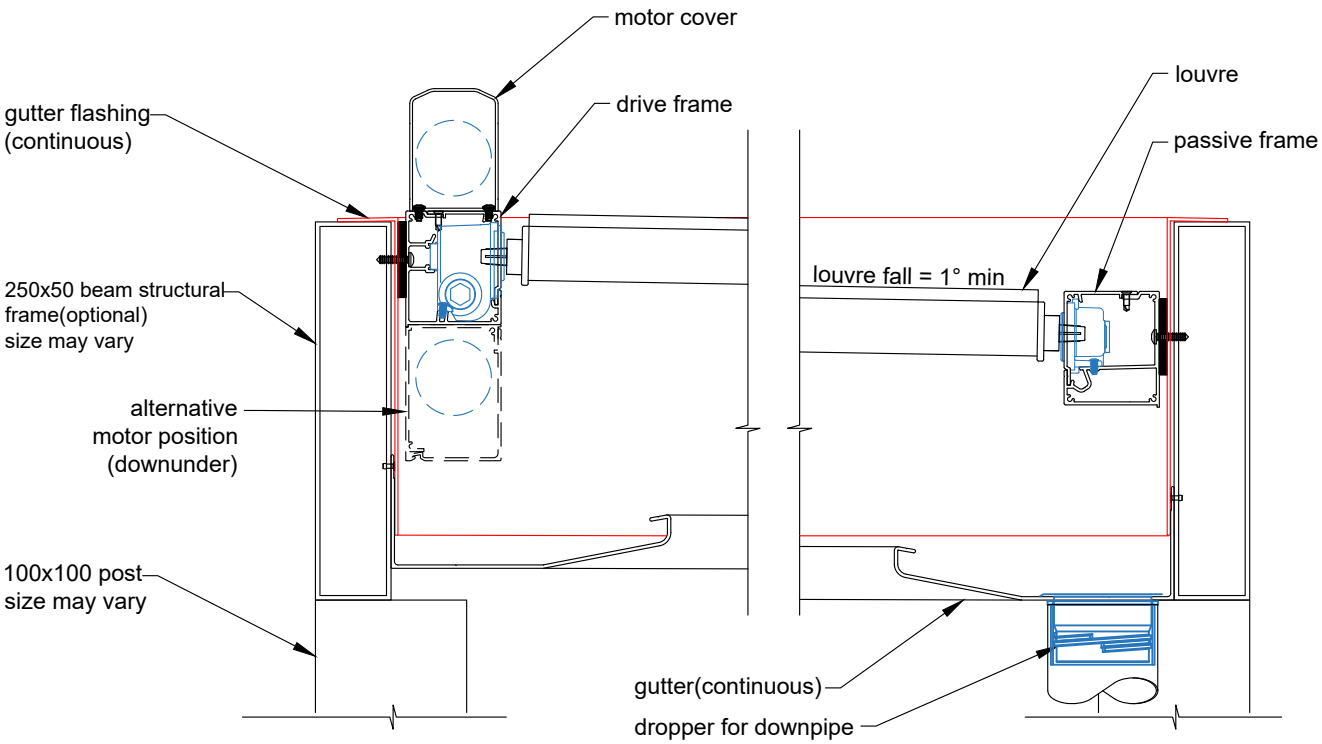


SECTION THROUGH SPAN

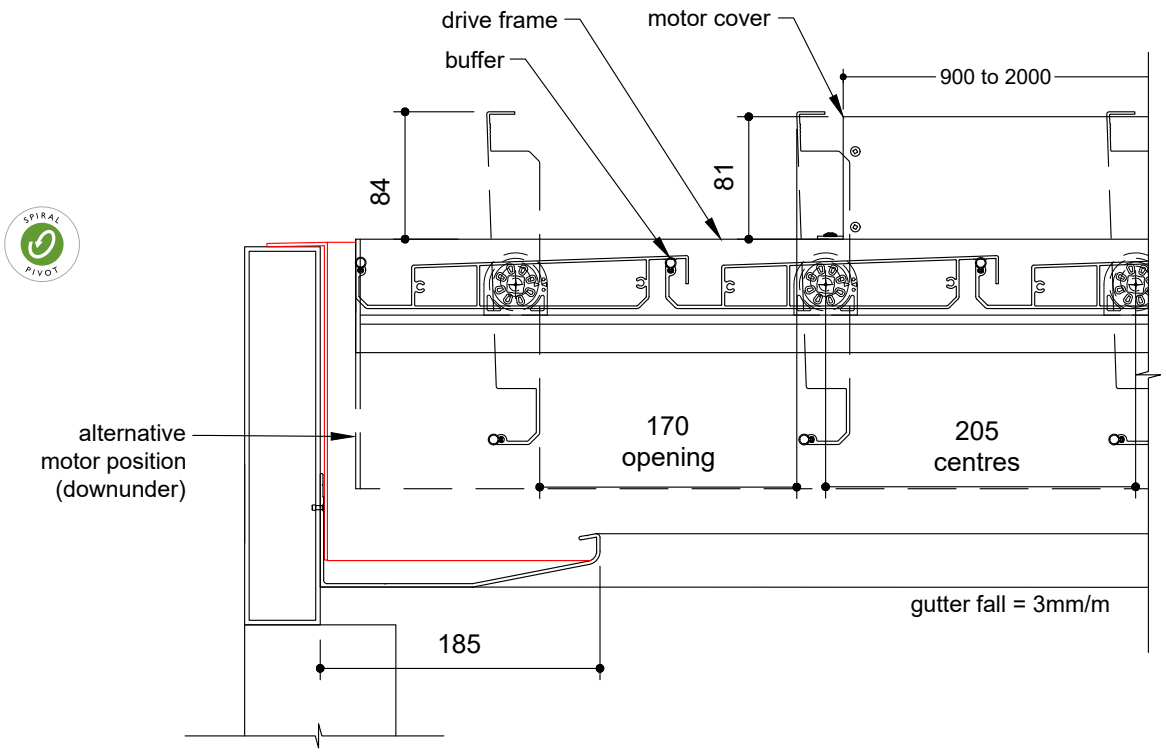


SECTION THROUGH LOUVRES


©Louvretec 2025 – All Rights Reserved. Technical specifications subject to change without notice.

## TYPICAL DETAIL : Manual Louvretec 220 opening slimline roof within Louvretec structural frame

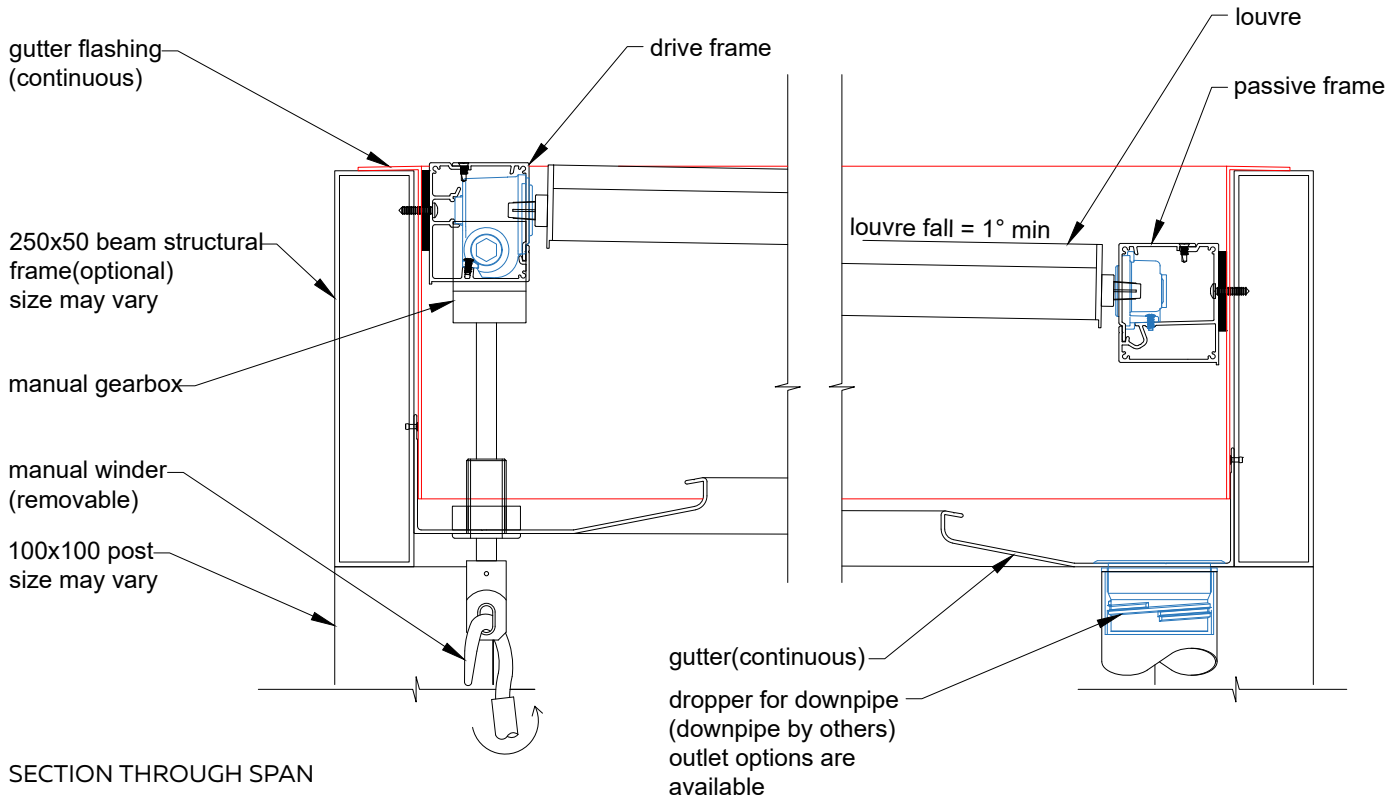


SECTION THROUGH SPAN

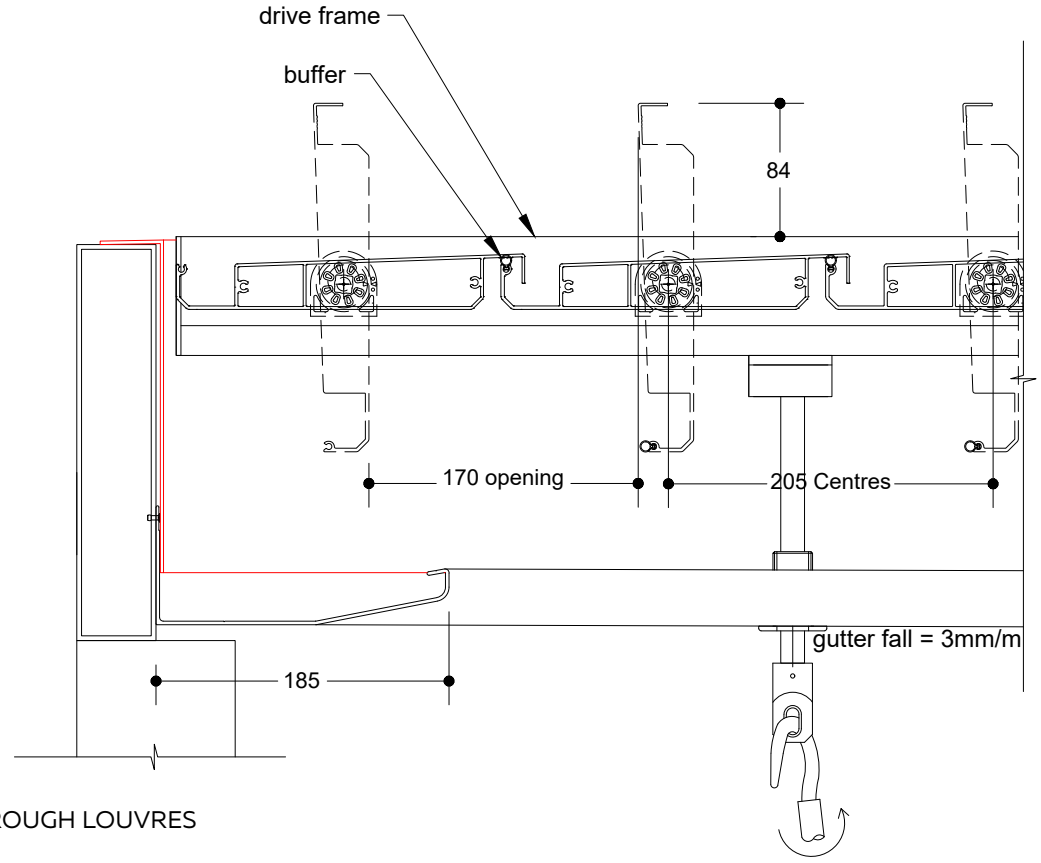


SECTION THROUGH LOUVRES



FILE: OPENING ROOFS 2.30 DATE MODIFIED: 01/10/2026 SCALE:

www.louvretec.co.nz www.louvretec.com.au

©Louvretec 2025 - All Rights Reserved. Technical specifications subject to change without notice.





EVERYTHING HAS A FLOW TO THE OUTDOORS
BY LOUVRETEC CANTERBURY



Louvretec 220/45 opening alpine* roof blade

- Due to it's extended span capabilities, a 20x3 end cap connecting bar is fitted below the blade to eliminate any individual blade movement in extreme conditions
- Available Spiral Pivot Opening Roof or Retract Roof

SPIRAL PIVOT RETRACT

# Louvretec 220/45 opening alpine* roof

**For larger spans, typically alpine and coastal locations*

## An award winning, multi-purpose Louvre blade compatible as a Spiral Pivot or Retract Roof.

The award winning Louvretec 220/45 opening alpine* roof features a multi-purpose roof blade compatible as a Spiral Pivot or a Retract Roof. This Opening Roof leads the way with outstanding spanning capabilities, ideal for high wind zone and alpine regions.

## Key Features

- Winner of the Window Shading Association of Australia (WSAA) Product Innovation Award, 2026
- Each blade top-tapers to 45mm high
- Blade is compatible as a Spiral Pivot or Retract Roof
- *For larger spans, typically alpine and coastal locations
- Sleek, functional design, clean and uncluttered when open or closed
- Design strength of an extruded double box-section
- Available Motorised using Somfy Motorisation, or hand-operated
- Features our award winning Spiral Pivot drive system, keeping mechanisms hidden
- "Cushion Closing" onto an external sun-resistant PVC bulb seal
- Increased closing cover angle for added weather protection
- Larger blade gutter incorporated for extra storm-water dispersal
- This Roof is a larger spanning version of the Louvretec 220 opening slimline roof

MOTORISED OR HAND OPERATED

Controller and Sensor Options Refer Pages 2.17 - 2.18 for range of options





SURFACE FINISHING OPTIONS

A wide range of options are available.

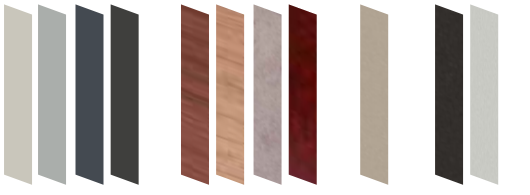

POWDERCOAT | WOODGRAIN & SPECIAL FINISHES | METALLIC | ANODISED

©Louvretec 2025 - All Rights Reserved. Technical specifications subject to change without notice.



**BLADE SPECIFICATIONS Louvretec 220/45 opening alpine* roof blade (Retract compatible)**

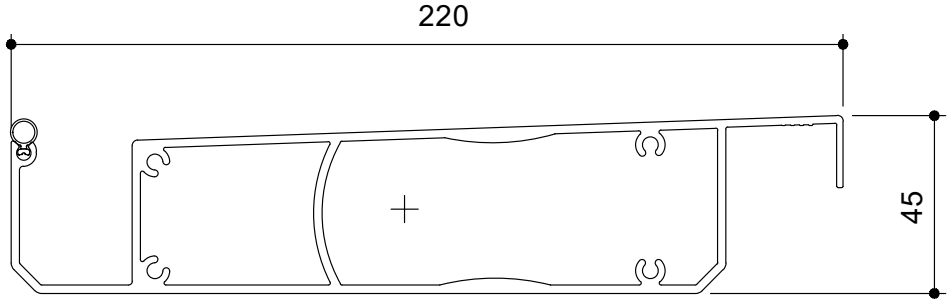


*For larger spans, typically alpine and coastal locations NTS

| BLADE SPECIFICATIONS | | | |
|---|---|---|---|
| Blade cover - opening system | 205 mm | Weight per linear metre - opening system | 3.74 kg/lm |
| Weight per square metre - opening system | 18.2 kg/sqm | Actual blade width | 220 mm |
| Blade centres - opening system | 205 mm | | |

SPANS AT A GLANCE

Refer Engineering Section. Climate, terrain, shielding, location, type of structure contribute to determine spans.

| WIND ZONE | INSIDE | LOW | MEDIUM | HIGH | VERY HIGH | EXTRA HIGH |
|---|---|---|---|---|---|---|
| Factored wind speed at building | Self wt | 32 m/s | 37m/s | 44 m/s | 50 m/s | 55 m/s |
| | | 115 km/hr | 133 km/hr | 158 km/hr | 179 km/hr | 198 km/hr |
| Louvretec 220/45 opening alpine* roof **3m Height** | 5000 | 5000 | 5000 | 5000 | 5000 | 5000 |
| Louvretec 220/45 opening alpine* roof **6m Height** | | 5000 | 5000 | 5000 | 5000 | 4700 |

INSTALLATION OPTIONS

CHOOSE DIRECTION OF BLADE PIVOT

LEFT HAND UP

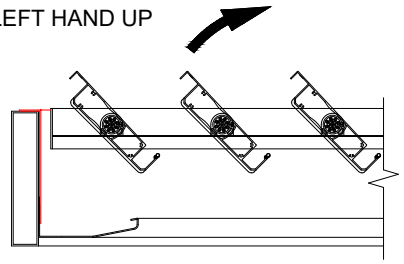

RIGHT HAND UP

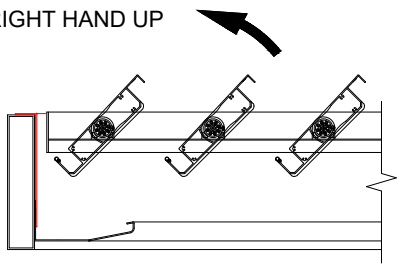

**CALCULATE OPTIMUM FRAME OPENING SIZES FOR SPIRAL PIVOT**

Span: Check engineering span limits

Pivot: Calculation example showing 17 blades

STEP 1

| | |
|---|---|
| 16 blades x 205 Crs | 3280 |
| 1 blade at 220 (blade size) | + 220 |
| 17 blades | = 3500 |

STEP 2

| | |
|---|---|
| Blade cover | 3500 |
| +2/22mm clearance @ ends | + 44 |
| Total exact pivot length | = 3544 |

Extra width 185mm gutter provides cover if clearance increases over 22mm at ends.

Blade direction either right hand up or left hand up.



©Louvretec 2025 – All Rights Reserved. Technical specifications subject to change without notice.

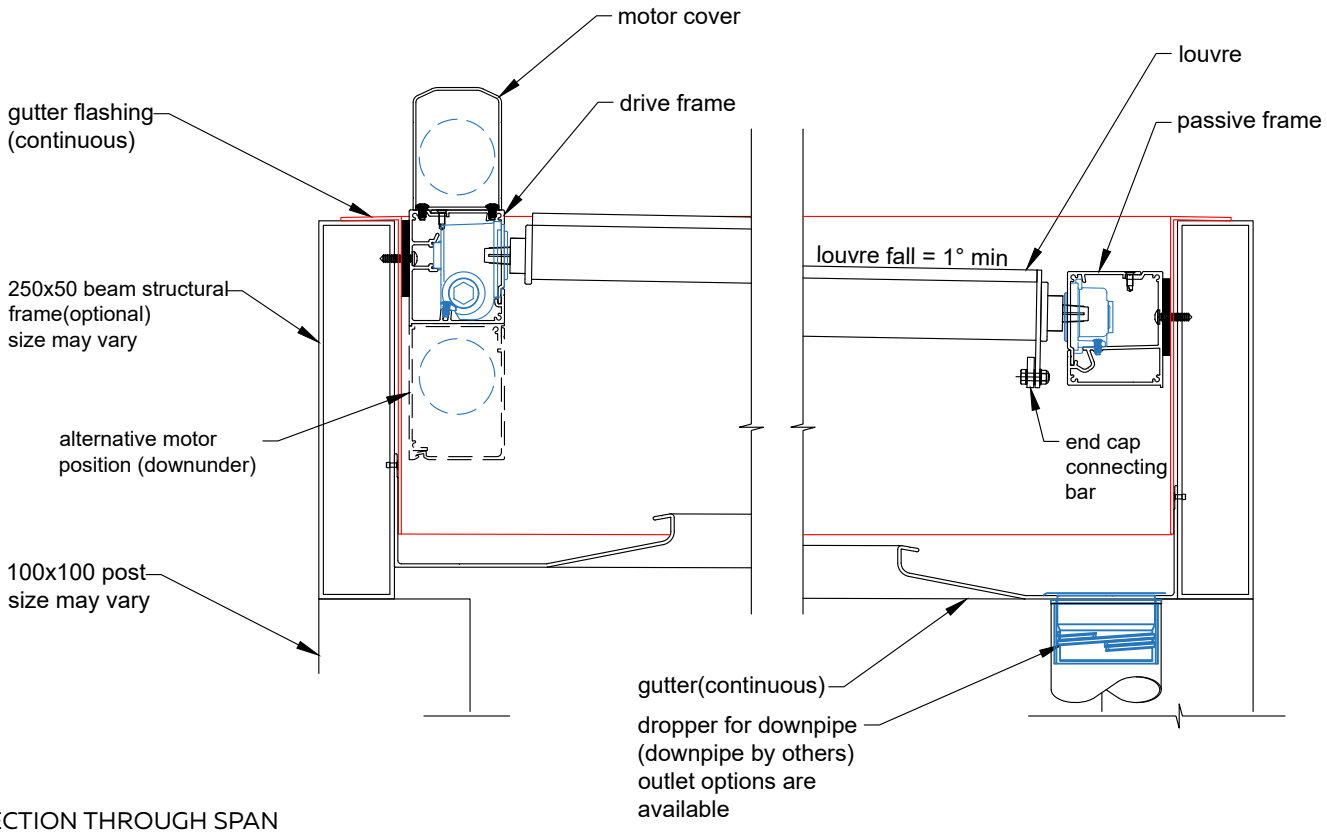


SECTION THROUGH SPAN

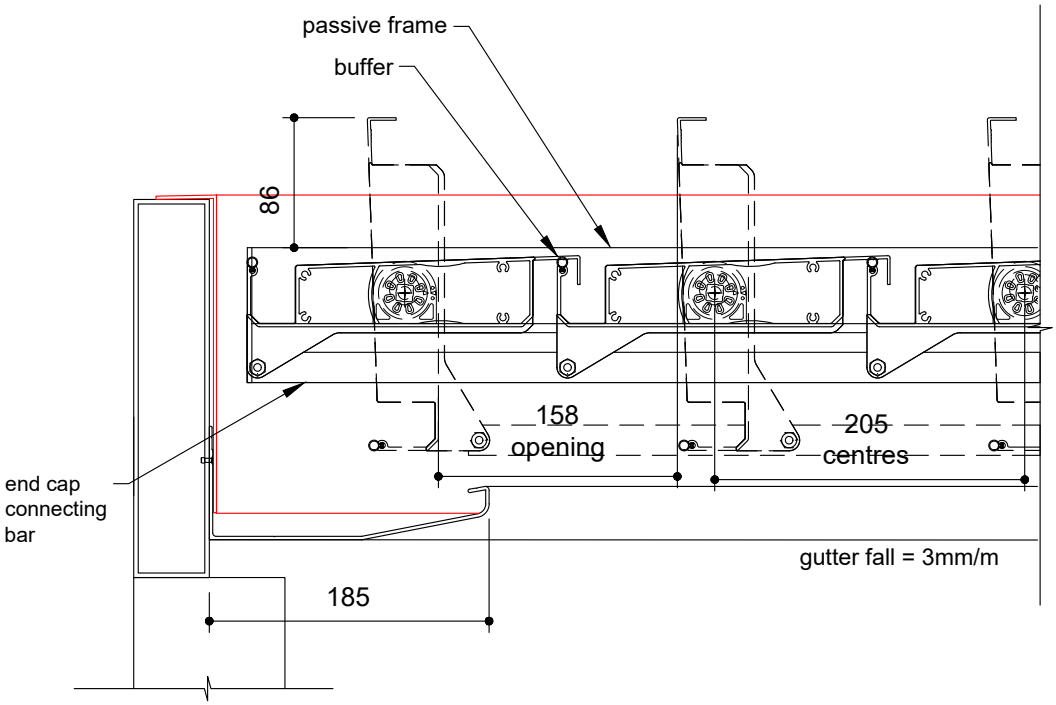


SECTION THROUGH LOUVRES


©Louvretec 2025 – All Rights Reserved. Technical specifications subject to change without notice.

**TYPICAL DETAIL : Manual Louvretec 220/45 opening alpine* roof, within Louvretec structural frame**

*For larger spans, typically alpine and coastal locations

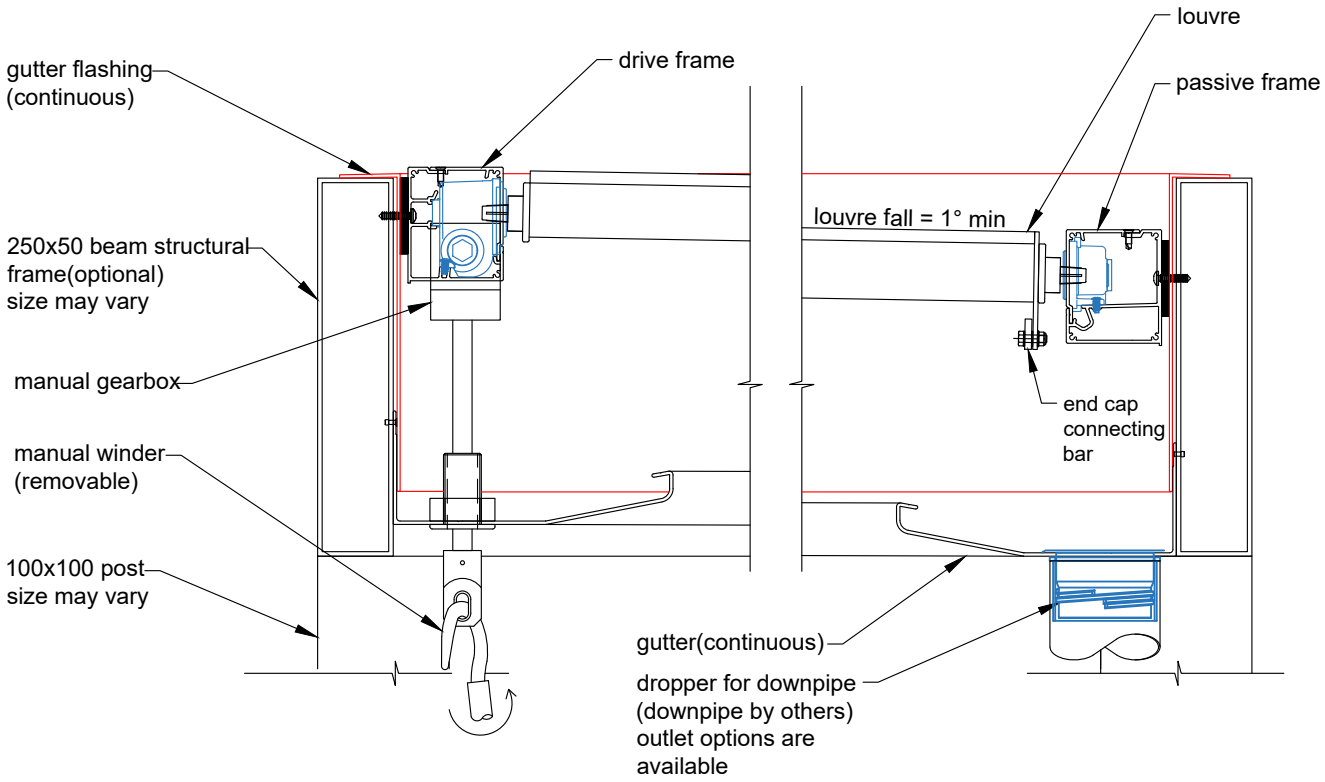


SECTION THROUGH SPAN

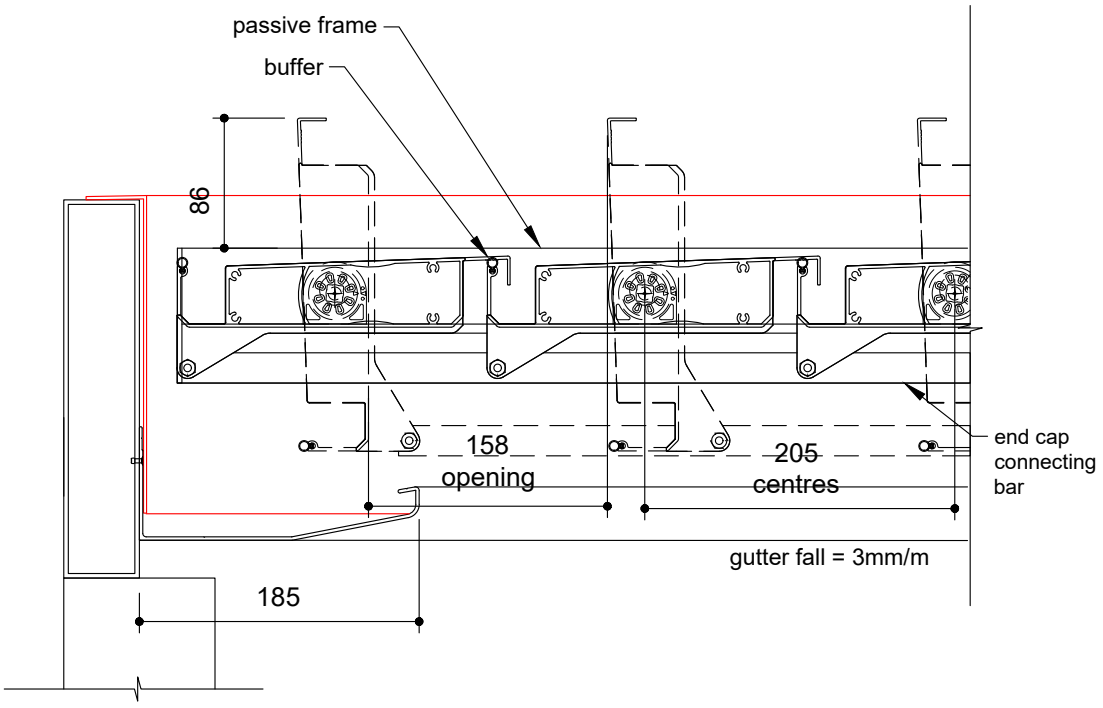


SECTION THROUGH LOUVRES



FILE: OPENING ROOFS 2.34 DATE MODIFIED: 01/10/2026 SCALE:

www.louvretec.co.nz www.louvretec.com.au

©Louvretec 2025 - All Rights Reserved. Technical specifications subject to change without notice.





SUBURBAN ROOFS BRINGING CONTROLLABLE SHADE & STYLE. BY LOUVRETEC ADELAIDE

# **Louvretec** 200 **opening suburban*** **roof**

**Designed with economy in mind*

## All the essentials

Designed with quality and economy in mind the Louvretec 200 opening suburban roof blades provide wide spanning capabilities, and has been an extremely well specified Opening Roof for many years. It's a firm favourite.

## Key Features

- Available Motorised using Somfy Motorisation, or hand-operated
- The Louvretec 200 opening suburban roof comes with an extruded motor cover and a 185mm extra wide gutter to all four sides as standard.
- Sleek, functional design, clean and uncluttered when open or closed
- Louvres open up to 170 degrees
- Features our award winning Spiral Pivot drive system, keeping mechanisms hidden
- Using the highest grade aluminium every aspect is fully engineered and backed by Louvretec's Opening Roof Warranty



Louvretec 200 opening suburban roof blade



Louvretec 200
opening suburban roof
BLADES CLOSED



Louvretec 200
opening suburban roof
BLADES OPENING

MOTORISED OR HAND OPERATED

Controller and
Sensor Options
Refer Pages
2.17 - 2.18
for range of options





SURFACE FINISHING OPTIONS

A wide range of options are available.

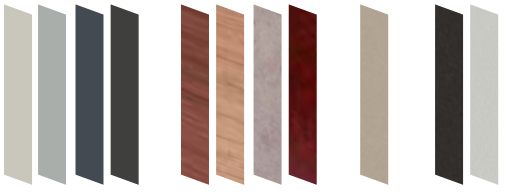

POWDERCOAT | WOODGRAIN & SPECIAL FINISHES | METALLIC | ANODISED

©Louvretec 2025 - All Rights Reserved. Technical specifications subject to change without notice.



## BLADE SPECIFICATIONS Louvretec 200 opening suburban roof blade

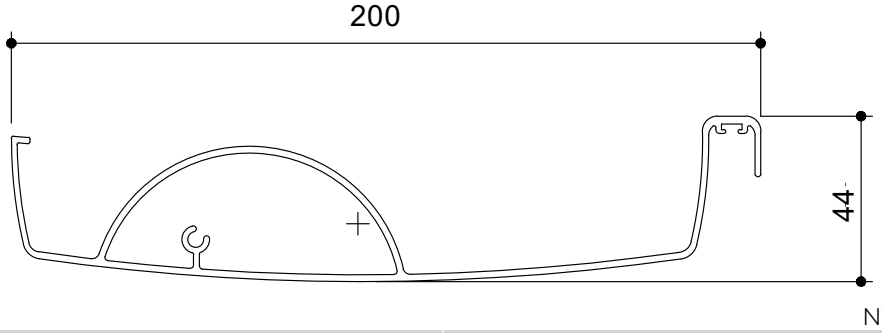


NTS

| BLADE SPECIFICATIONS | | | |
|---|---|---|---|
| Blade cover - opening system | 188 mm | Weight per linear metre - opening system | 1.928 kg/lm |
| Weight per square metre - opening system | 10.25 kg/sqm | Actual blade width | 200 mm |
| Blade centres - opening system | 188 mm | | |

### SPANS AT A GLANCE

Refer Engineering Section. Climate, terrain, shielding, location, type of structure contribute to determine spans.

| WIND ZONE | INSIDE | LOW | MEDIUM | HIGH | VERY HIGH | EXTRA HIGH |
|---|---|---|---|---|---|---|
| Factored wind speed at building | Self wt | 32 m/s | 37m/s | 44 m/s | 50 m/s | 55 m/s |
| | | 115 km/hr | 133 km/hr | 158 km/hr | 179 km/hr | 198 km/hr |
| Louvretec 200 opening suburban roof **3m Height** | 4500 | 4500 | 4500 | 4000 | 3600 | 3300 |
| Louvretec 200 opening suburban roof **6m Height** | | 4500 | 4500 | 3800 | 3250 | 3000 |

### INSTALLATION OPTIONS

### CHOOSE DIRECTION OF BLADE PIVOT

LEFT HAND UP

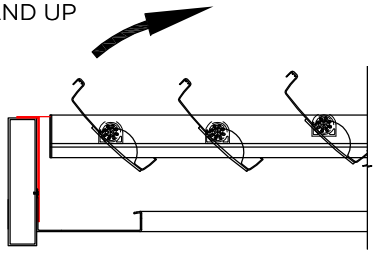

RIGHT HAND UP

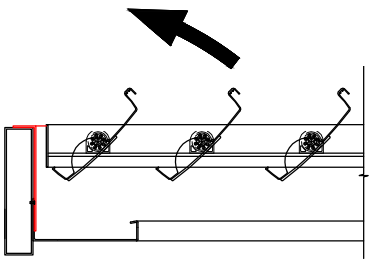

### CALCULATE OPTIMUM FRAME OPENING SIZES FOR SPIRAL PIVOT

**Span:** Check engineering span limits

**Pivot:** Calculation example showing 17 blades

STEP 1

| | |
|---|---|
| 16 blades x 188 Crs | 3008 |
| 1 blade at 200 (blade size) | + 200 |
| 17 blades | = 3208 |

STEP 2

| | |
|---|---|
| Blade cover | 3208 |
| +2/22mm clearance @ ends | = 44 |
| Total exact pivot length | = 3252 |

Extra width 185mm gutter provides cover if clearance increases over 22mm at ends.

Blade direction either Right Hand up or Left Hand up.



©Louvretec 2025 – All Rights Reserved. Technical specifications subject to change without notice.

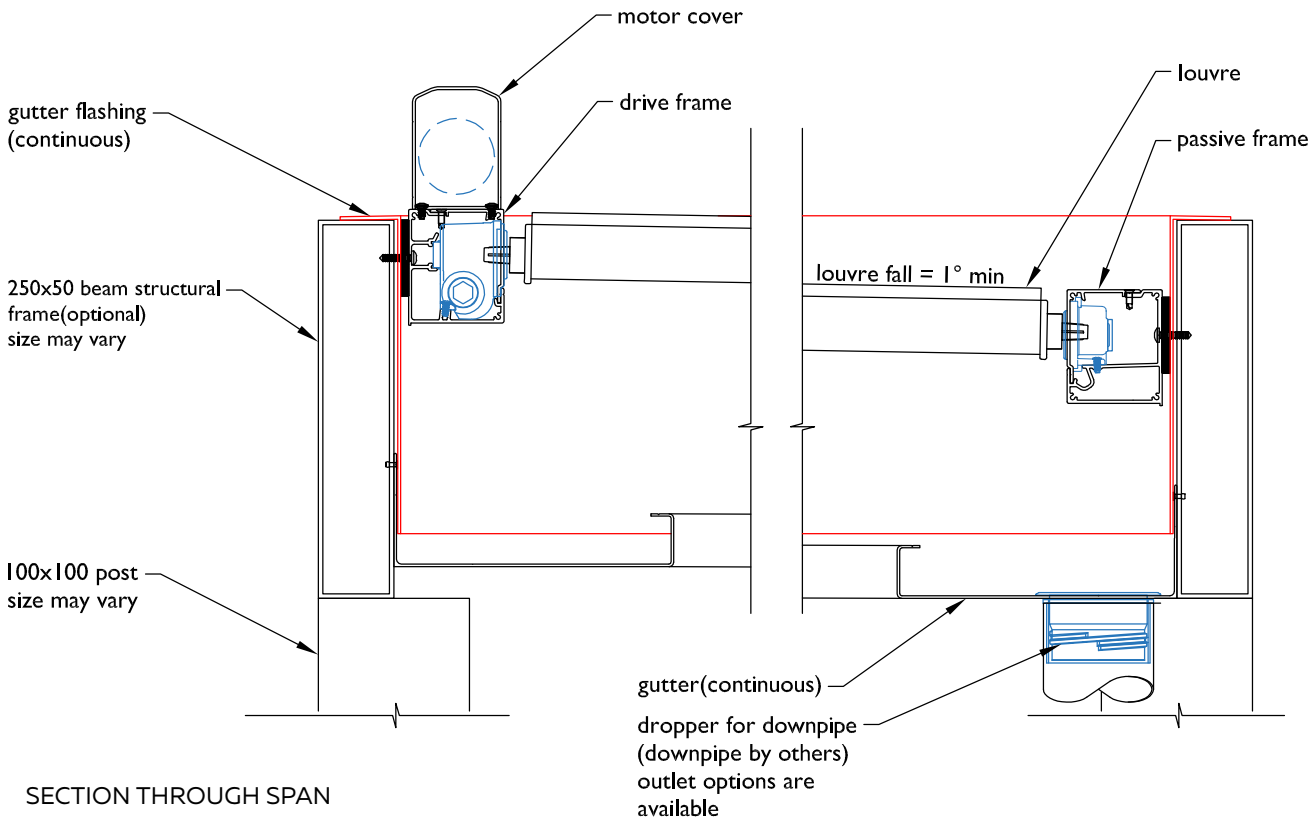


SECTION THROUGH SPAN

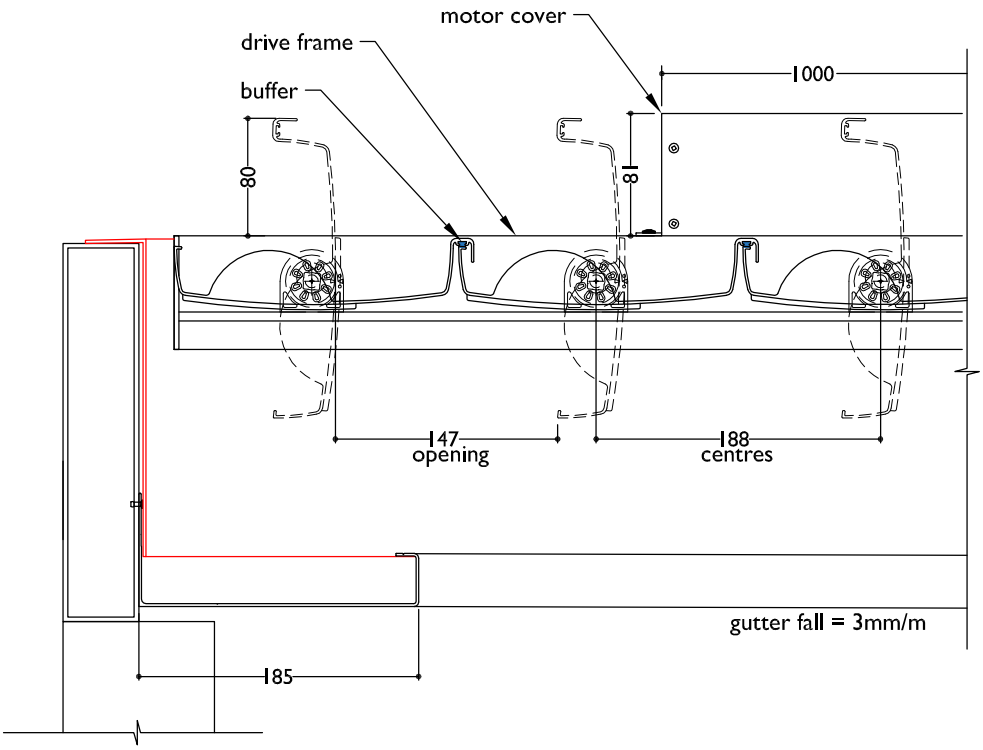


SECTION THROUGH LOUVRES


©Louvretec 2025 – All Rights Reserved. Technical specifications subject to change without notice.

## TYPICAL DETAIL : Manual Louvretec 200 opening suburban roof within Louvretec structural frame

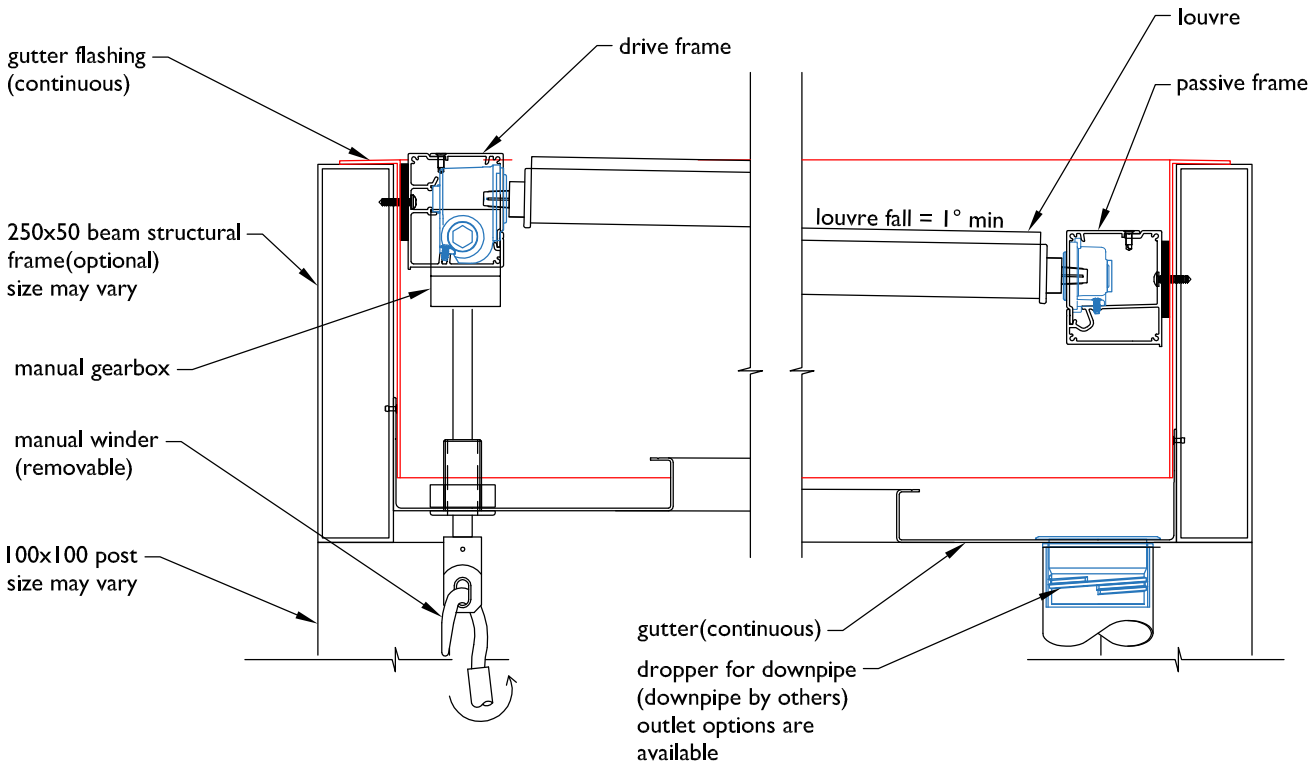


SECTION THROUGH SPAN

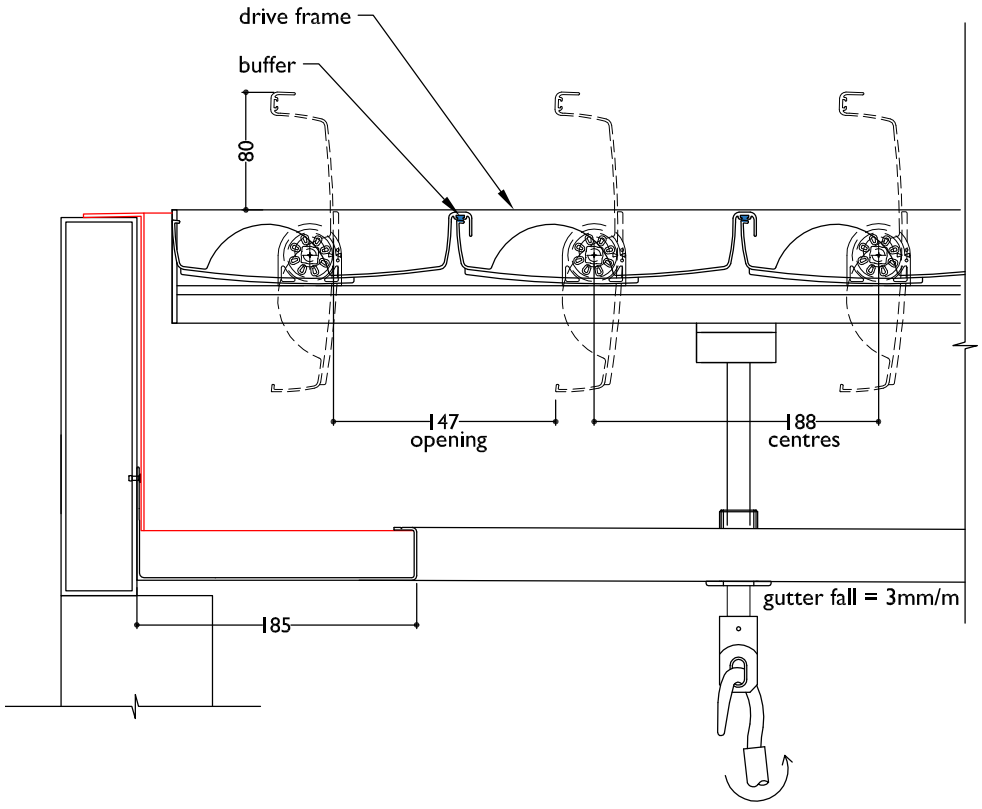


SECTION THROUGH LOUVRES



FILE: OPENING ROOFS 2.38 DATE MODIFIED: 01/10/2026 SCALE:

www.louvretec.co.nz www.louvretec.com.au

©Louvretec 2025 - All Rights Reserved. Technical specifications subject to change without notice.

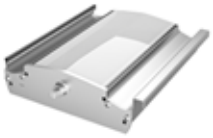



A FILTERED LIGHT-FILLED OUTDOOR ROOM
BY LOUVRETEC AUCKLAND



Louvretec 270 opening translucent roof blade

# Louvretec 270 opening translucent* roof

**Creates a tranquil, light filled outdoor room*

## Let there be light

If loss of light is an issue when the Opening Roof is closed, the unique Louvretec 270 opening translucent roof provides a great solution.

This opening roof has been re-designed to include "Cushion Closing" on to an external sun-resistant bulb seal.
The Louvretec 270 opening translucent roof also features a beautiful, white in-fill panel of Acrylic Naturelite Plexiglas.

Plexiglas offers natural UV protection throughout the material, it does not rely on an applied surface coating for UV protection. It is one of the reasons Plexiglas is used in aircraft cabin windows to protect from strong UV light and substantial differences in pressure and extreme cold.

This same material is now used on Louvretec 270 translucent openign roofs - high light transmission coupled with naturally UV-stable technology is as good as it gets!

This style of Opening Roof now comes with a 185mm extra wide gutter to all four sides as standard.



Louvretec 270
opening translucent roof
BLADES CLOSED



Louvretec 270
opening translucent roof
BLADES OPENING

MOTORISED OR HAND OPERATED
Controller and
Sensor Options
Refer Pages
2.17 - 2.18
for range of options





SURFACE FINISHING OPTIONS
A wide range of options are available.

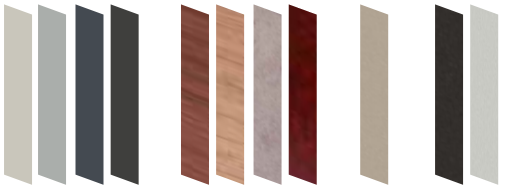

POWDERCOAT | WOODGRAIN & SPECIAL FINISHES | METALLIC | ANODISED

©Louvretec 2025 - All Rights Reserved. Technical specifications subject to change without notice.



**BLADE SPECIFICATIONS Louvretec 270 opening translucent roof blade**

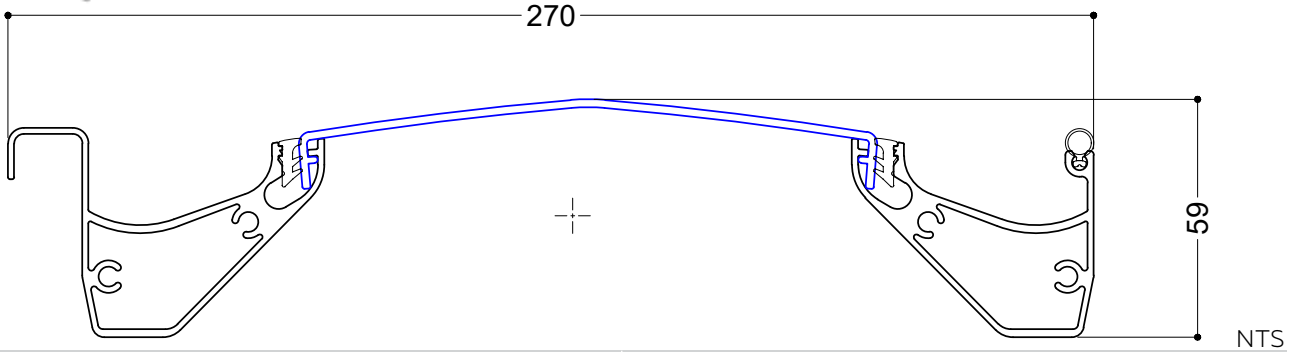


| BLADE SPECIFICATIONS | | | |
|---|---|---|---|
| Blade cover - opening system | 256 mm | Weight per linear metre - opening system | 2.4 kg/lm |
| Weight per square metre - opening system | 9.4 kg/sqm | Actual blade width | 270 mm |
| Blade centres - opening system | 256 mm | | |

## SPANS AT A GLANCE

Refer Engineering Section. Climate, terrain, shielding, location, type of structure contribute to determine spans.

| WIND ZONE | INSIDE | LOW | MEDIUM | HIGH | VERY HIGH | EXTRA HIGH |
|---|---|---|---|---|---|---|
| Factored wind speed at building | Self wt | 32 m/s | 37m/s | 44 m/s | 50 m/s | 55 m/s |
| | | 115 km/hr | 133 km/hr | 158 km/hr | 179 km/hr | 198 km/hr |
| Louvretec 270 opening translucent roof **3m Height** | 4500 | 4500 | 4500 | 4000 | 3500 | 3250 |
| Louvretec 270 opening translucent roof **6m Height** | | 4500 | 4500 | 3550 | 3250 | 3000 |

## INSTALLATION OPTIONS

## CHOOSE DIRECTION OF BLADE PIVOT

LEFT HAND UP

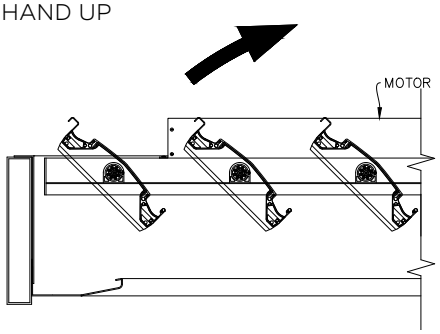


RIGHT HAND UP

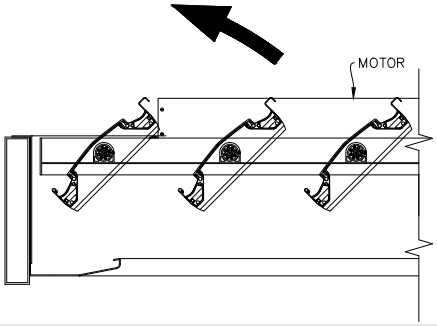


## CALCULATE OPTIMUM FRAME OPENING SIZES FOR SPIRAL PIVOT

Span: Check engineering span limits

Pivot: Calculation example showing 17 blades

STEP 1

| | |
|---|---|
| 16 blades x 256 Crs | 4096 |
| 1 blade at 270 (blade size) | + 270 |
| 17 blades | = 4366 |

STEP 2

| | |
|---|---|
| Blade cover | 4366 |
| +2/22mm clearance @ ends | = 44 |
| Total exact pivot length | = 4410 |

Extra width 185mm gutter provides cover if clearance increases over 22mm at ends.

Blade direction either Right Hand up or Left Hand up.



©Louvretec 2025 – All Rights Reserved. Technical specifications subject to change without notice.

# TYPICAL DETAIL: Motorised Louvretec 270 opening translucent roof within Louvretec structural frame

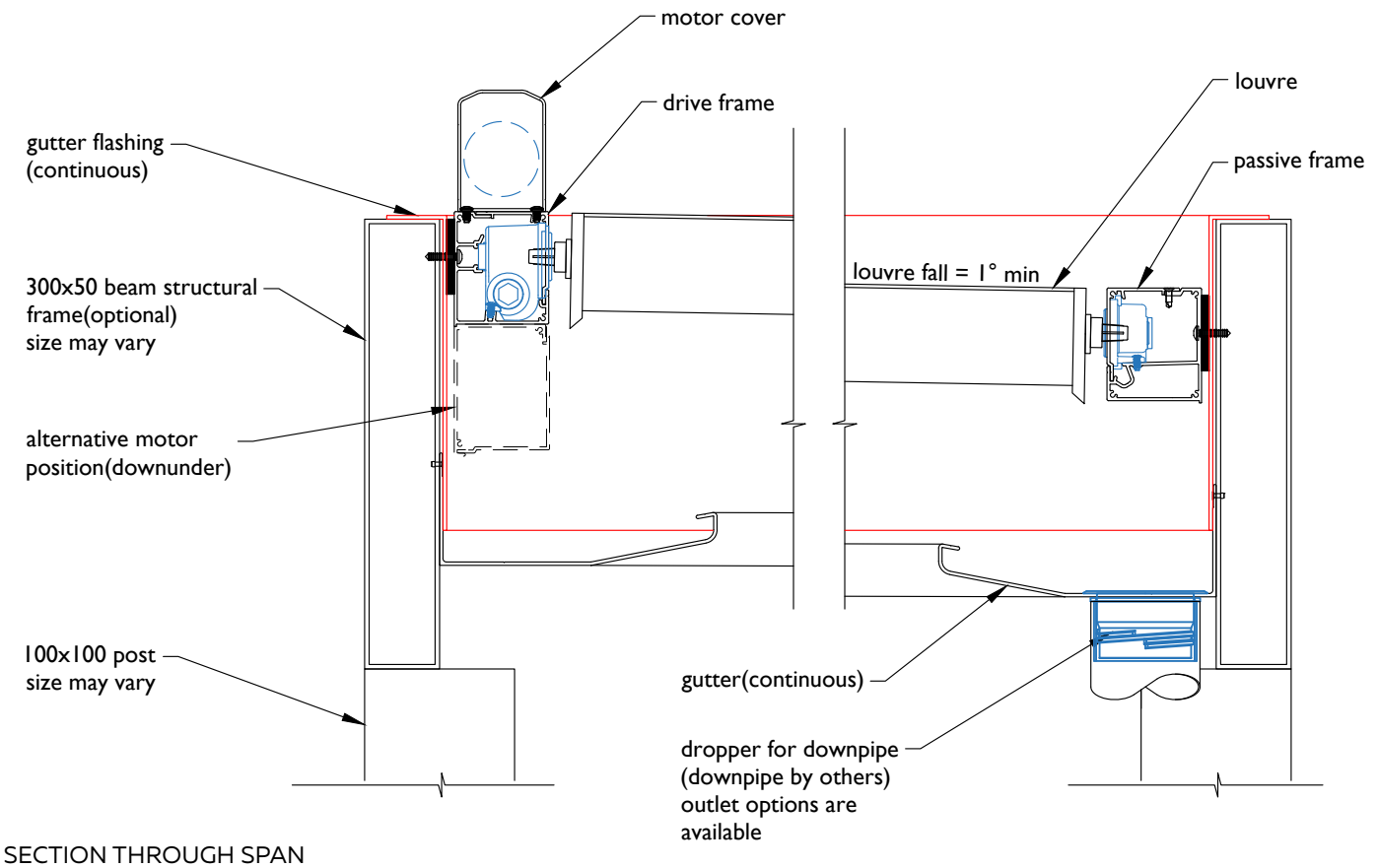


SECTION THROUGH SPAN

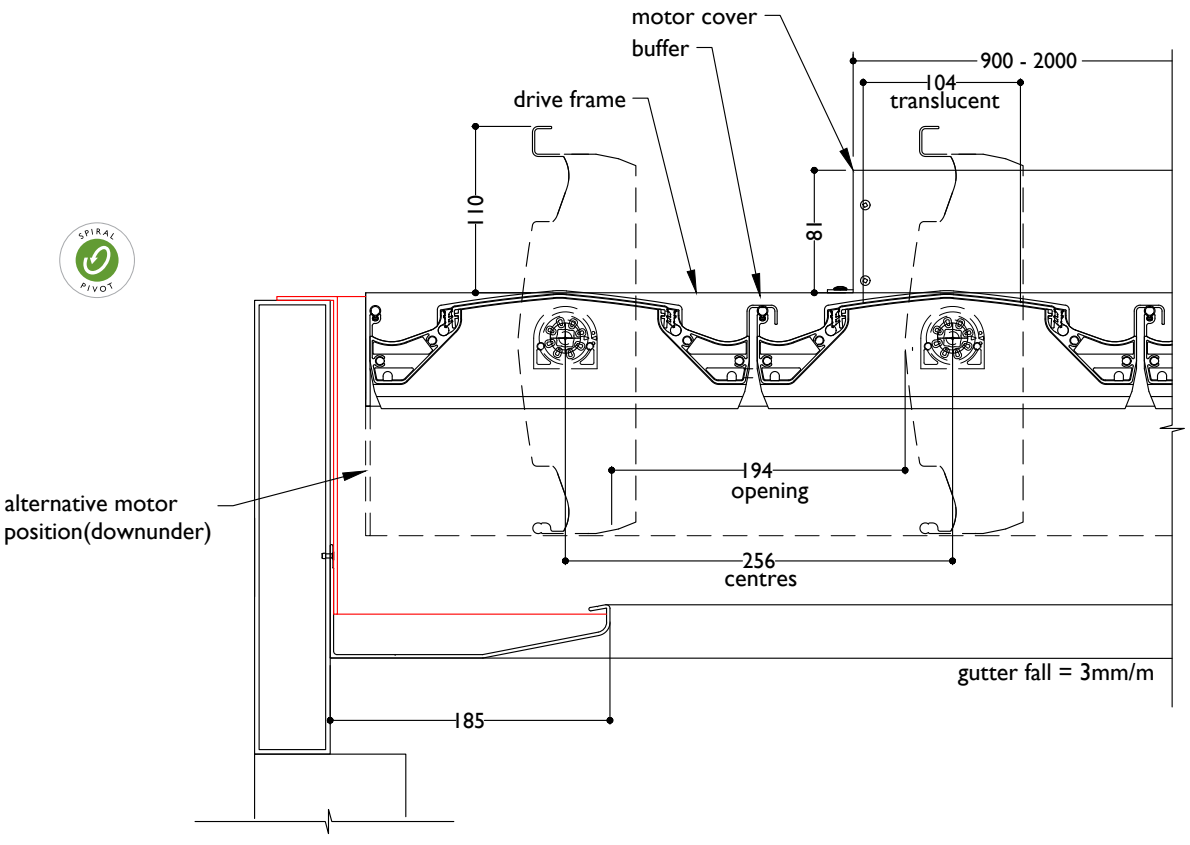


SECTION THROUGH LOUVRES


©Louvretec 2025 – All Rights Reserved. Technical specifications subject to change without notice.

## TYPICAL DETAIL : Manual Louvretec 270 opening translucent roof within Louvretec structural frame

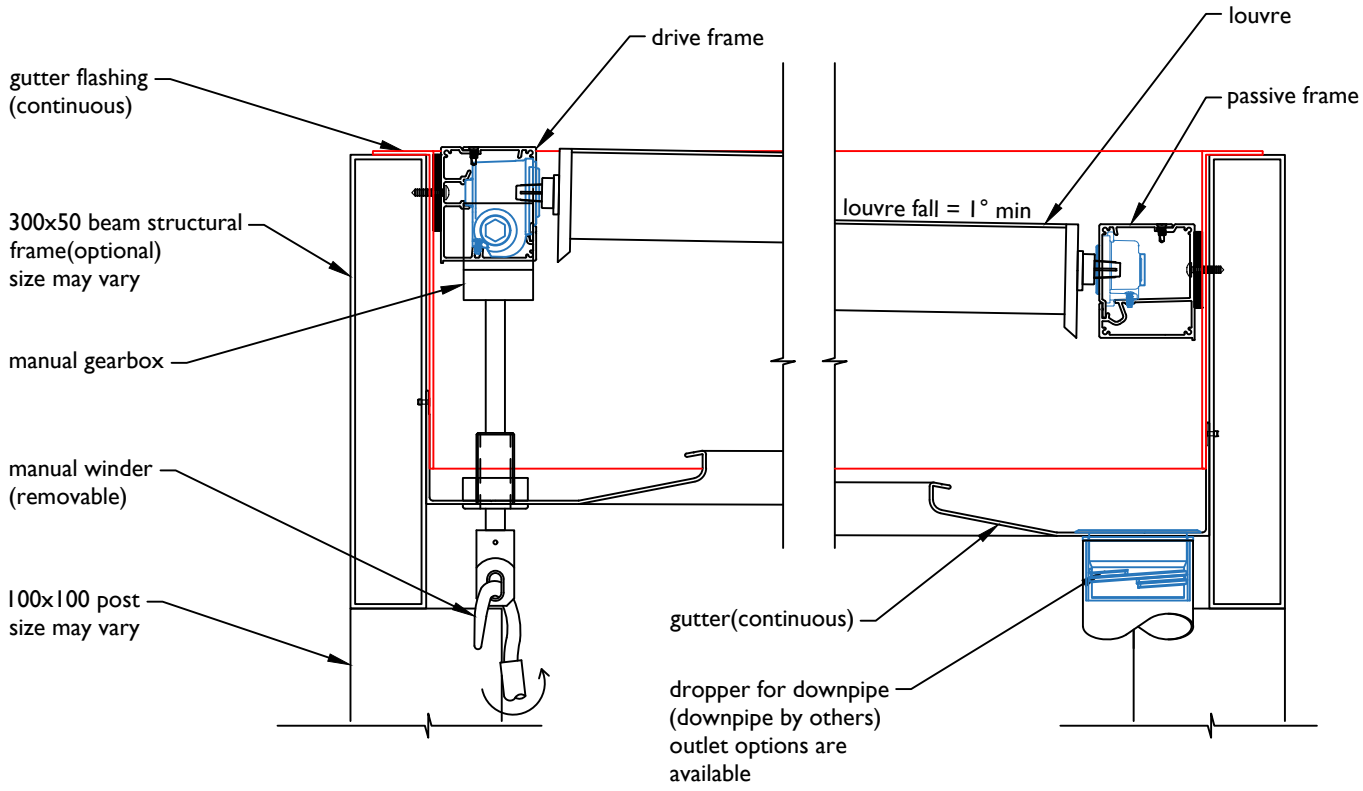


SECTION THROUGH SPAN

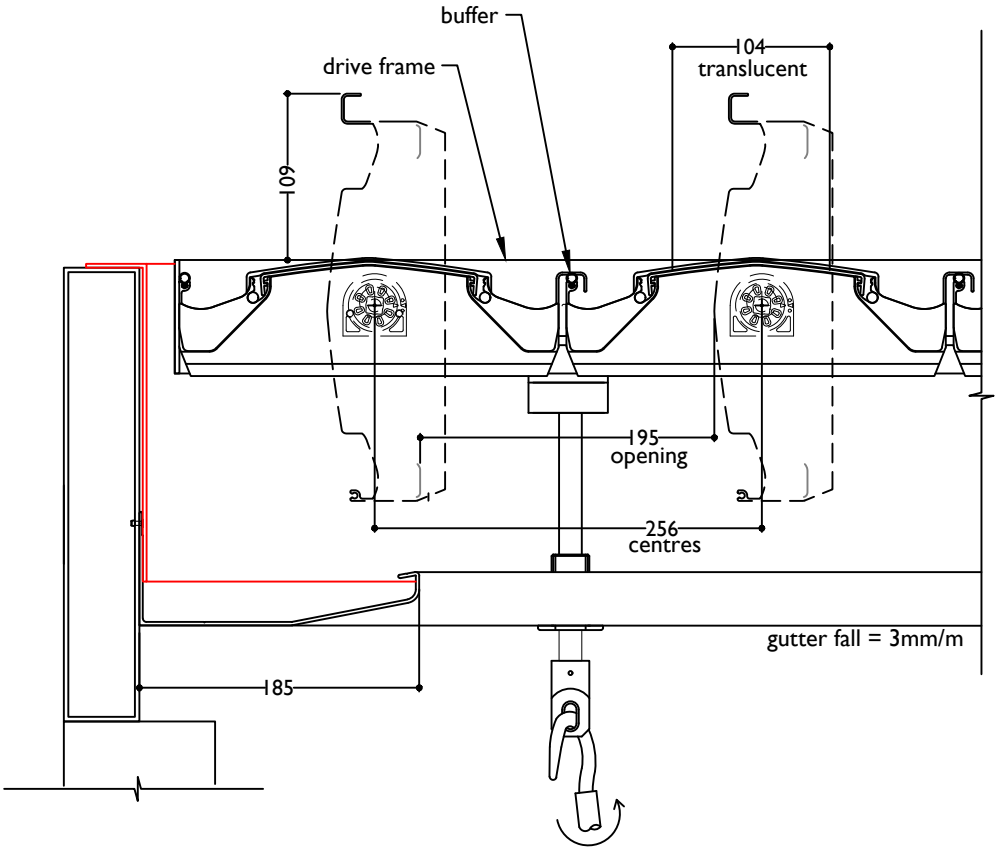


SECTION THROUGH LOUVRES





©Louvretec 2025 - All Rights Reserved. Technical specifications subject to change without notice.

# LOUVRETEC PRODUCT WARRANTY

## OPENING ROOFS - SUN LOUVRES - SHUTTERS

**The Louvretec range of products:**

All Louvretec branded products are designed and engineered in Australia & New Zealand by Louvretec to comply with relevant AS/NZS standards - refer to full Louvretec Engineering data Design Manual 2025 Section 13.

Louvretec has the most extensive range of outdoor sun shading/ outdoor living products available in Australasia, backed by a comprehensive network of Louvretec Dealers.

Most Louvretec products sold in Australia are made in Australia*

Most Louvretec products sold in New Zealand are made in New Zealand*

*Some specialised products may only be made in Australia or in NZ and are shipped between each country.

**The Authorised Louvretec Dealer Network:**

Your Louvretec product will have been supplied and installed by your local Authorised Louvretec Dealer. All Louvretec Dealerships are privately owned, and the same Louvretec Dealer who supplied your Louvretec will also service your Louvretec.

Your Louvretec product has been "Engineered for Life" and we are committed to ensuring that happens.

**Louvrecare:**

Preventative maintenance and valet. Regular scheduled servicing by a Louvrecare team has real benefits. Louvrecare can vary between Dealerships - consult your local Louvretec Dealer.

LouvreCare
PREVENTATIVE MAINTENANCE & VALET









*Engineered for Life*

LouvreTec®
OPENING & RETRACT ROOFS / SUN LOUVRES / SHUTTERS

©Louvretec 2025 - All Rights Reserved. Technical specifications subject to change without notice.

# LOUVRETEC PRODUCT WARRANTY

EFFECTIVE FROM NOVEMBER 2026

HEAD OFFICE:
23c Douglas Alexander Pde, Albany, Auckland, New Zealand
T: +64 9 415 4949 E: info@louvretec.co.nz

## OPENING ROOFS - SUN LOUVRES - SHUTTERS

**warranty details & workmanship** — 2 YEARS

All product installed by Louvretec (excluding Outdoor Blinds - please refer separate warranty for this) , or an Authorised Louvretec Installer, is from date of invoice, fully warranted for the first two years. This warranty covers workmanship, louvres and all componentry, motors, switches and electronics with all labour costs included. In addition, from year two to end of year five, a warranty replacement of parts only applies for all motors, switches and electronics. Labour costs excluded. (Excludes any wiring and electrical connections done by others).

**motorisation** — 5 YEARS

Louvretec exclusively uses Somfy motors, switches and electronics. Somfy offers a 5-year warranty on all motors and electronics.
Please contact Louvretec NZ or Somfy for a complete list of all terms and conditions.

**product materials**

All aluminium louvres and extrusions used in Louvretec's systems are manufactured in an ISO9002 quality assured environment to AS1866 & AS3902 standards. Marine grade T316 stainless steel is used for drive axles, with stainless steel componentry fixings being standard. Plastic injected moulded componentry is all UV stabilised.

**powdercoat finishes** — 15 YEARS

A wide range of exterior powder coat finishes are available. Different finishes carry different warranties, from 10 – 25 years, but is no less than 10years for Duralloy. Duralloy® +PLUS or equivalent is the standard finish supplied unless stated otherwise and this carries a 15 year film and colour integrity warranty as per the Dulux Powder and Industrial Coatings Warranty. If your project has used the Duratec powdercoat range please refer to the Dulux Powder and Industrial Coatings Warranty wording.

**anodised finishes** — 10 YEARS

The current specifications re anodised aluminium range from 12-20-25 microns depth. The greater the microns the better the protection. With regular cleaning anodised material will retain its original integrity for no less than 10 years.

**fully engineered structural** — 15 YEARS

Our louvre systems are designed to conform to New Zealand and Australian standards wind loadings. Full engineering details available on request.

The aluminium structure of your Opening Roof, Sun Louvre, and or Shutter system including the aluminium frame, beams, posts, and louvre blades, will be free from defects in materials that affect structural integrity for 15 years from the date of installation. What this covers: If the structure fails during the warranty period, Louvretec will, at its option, repair or replace the affected structure. Conditions: This warranty applies where the system has been installed by an Authorised Louvretec Dealer in accordance with our installation specifications and relevant building codes, and has been maintained in line with the Louvretec care and maintenance guide. What's not covered: Damage caused by misuse, accident, modification, or unauthorised repairs; storm, flood, or other events beyond design wind and load ratings; improper installation by non-authorised parties; normal wear and tear; and cosmetic changes such as minor weathering or colour variation.

**cleaning**

At least every 6 months cleaning is essential to remove dirt, grime and accumulated salt deposits from both powder coated and anodised surfaces. Three steps for cleaning are:
1. Carefully remove any loose deposits with a wet sponge
2. Use a soft, non-abrasive brush & mild household cleaning detergent solution to remove dust, salt & other deposits.
3. Rinse off with clean, fresh water

**product description**

_____
_____
_____

**louvrecare**

Louvrecare is a planned preventative maintenance and valet service designed to keep your Louvretec product clean and in good working order. Contact your Louvretec Dealer for full details.

**effective from**

Warranty effective from _____/_____/_____

Louvretec Representative _____ Print name _____

Site Address _____



DATE MODIFIED: 01/10/2026

©Louvretec 2025 – All Rights Reserved. Technical specifications subject to change without notice.



# louvretec retract
## Retract Roofs


| | |
|---|---|
| Retract Roofs Gallery & Overview | 3.02- 3.05 |
| Range & Configuration options at a glance | 3.06 - 3.10 |
| Louvretec 220 retract slimline roof | 3.11 - 3.13 |
| Louvretec 220/45 retract alpine* roof<br>*For larger spans, typically alpine and coastal locations | 3.14 - 3.17 |
| Pitched Retract Roofs | 3.18 - 3.19 |
| Extrusions | 3.20 |
| Motors & Motor Location | 3.21 - 3.22 |
| Electrical Wiring Locations & Power to Controller | 3.23 |
| 3 Sided Frame Configurations & Calculations | 3.24 - 3.26 |
| 4 Sided Frame Configurations & Calculations | 3.27 - 3.35 |
| Stack dimensions | 3.36 |
| Remote Controller | 3.37 |
| Retract After Sales Care | 3.38 |
| Safe operation of Louvres | 3.39 |
| Warranty information | 3.40 - 3.41 |


©Louvretec 2025 – All Rights Reserved. Technical specifications subject to change without notice.

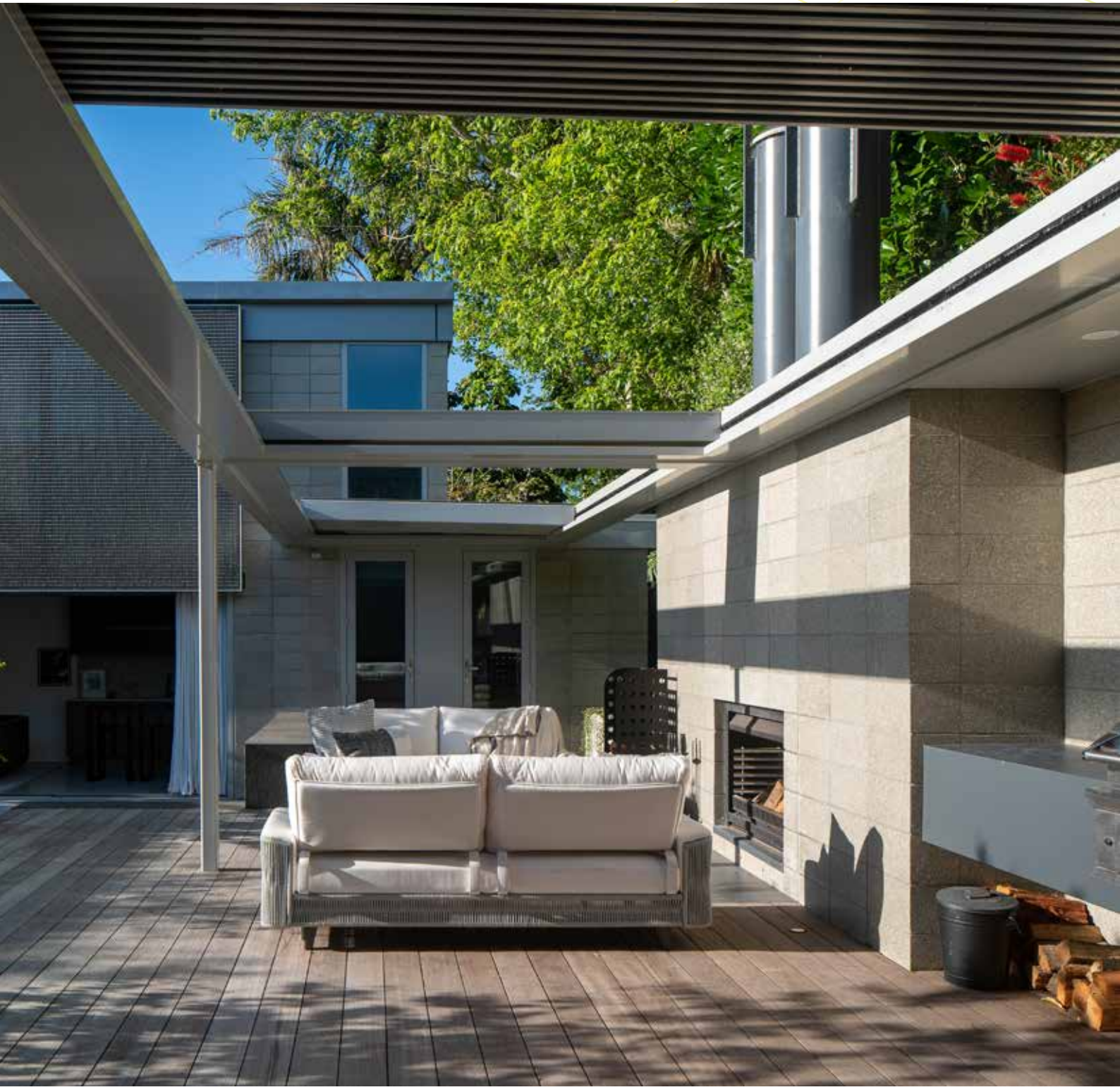



©Louvretec 2025 – All Rights Reserved. Technical specifications subject to change without notice.

# RETRACT ROOFS




©Louvretec 2025 – All Rights Reserved. Technical specifications subject to change without notice.

# RETRACT ROOFS **GALLERY**













**1.** RETRACT ROOFS IN 4 SIDED FRAME. PALM BEACH, NSW, AU | **2.** RETRACT ROOFS AT SORA RESTAURANT, ADELAIDE, AU

**3.** **DOUBLE** RETRACT ROOFS, TAKAPUNA BEACH, NZ | **4.** RETRACT ROOF RETRACTED BACK, BRONTE, NSW, AUS



©Louvretec 2025 – All Rights Reserved. Technical specifications subject to change without notice.



CANAL LIVING, QUEENSLAND
Louvretec 220 retract slimline roof



LOUVRETEC RETRACT SLIMLINE ROOF BLADE SHAPE
(RETRACT & SPIRAL PIVOT COMPATIBLE)




POWERED BY SOMFY MOTORS

# LOUVRETEC RETRACT ROOFS

## Open | Close | Retract | Repeat

Louvretec Retract Roofs feature a slimline design with a quiet-closing system that seals smoothly onto a bulb seal strip. This creates a snugger fit, and increased overlap coverage when the blades are closed.

Open up your space and enjoy the sky above by retracting the louvre blades as required. When positioned overhead, the louvres provide adjustable shade and shelter, giving you control over your outdoor space.

Louvretec Retract Roof blades are also fully compatible with our spiral pivot opening roofs, making them an ideal solution for multi-roof projects.

## Retract slimline Roof Key Features

Available in two sizes;

- Louvretec 220 retract slimline roof
- Louvretec 220/45 retract alpine* roof
  *For larger spans, typically alpine and coastal locations
- Both Retract Roof louvre blades are also compatible with our Spiral Pivot Opening Roofs, a great solution for multi-roof projects!
- Sleek, functional design, clean and uncluttered when open or closed
- Design strength of an extruded double box-section
- Somfy powered
- "Cushion Closing" onto a bulb seal strip
- Increased closing cover angle for added weather protection
- Larger blade gutter incorporated for extra storm-water dispersal

## Powered by Somfy

The same tried and true motorisation that operates our award winnning spiral pivot system now operates our retract roofs. Two Somfy motors per retract.

## Customised Louvretec Controller

A wireless handheld remote, custom made for Louvretec by Teleco, Italy is standard. These multi-function remotes can also control lighting, heating and other Somfy powered items such as motorised outdoor blinds.

## Proudly NZ & Australian designed and manufactured

All jointly designed, manufactured and distributed worldwide by Louvretec NZ Ltd & Louvretec Australia Pty Ltd.

©Louvretec 2025 – All Rights Reserved. Technical specifications subject to change without notice.

# LOUVRETEC RETRACT ROOF RANGE

Choose from two Retract Roof options.
Both Retract blades are also compatible with Louvretec's Spiral Pivot Opening Roof system!

louvretec retract — Retract Roofs pivot louvre roof blades open & closed & Retract back

Spiral Pivot Opening Roofs pivot louvre roof blades open & closed

| ***TYPE/COLLECTION*** | ***LOUVRE BLADE STYLE*** | ***MAXIMUM SPANS*** |
|---|---|---|
| LOUVRETEC RETRACT ROOFS<br>louvretec retract<br>Both Louvretec Retract Roof blades are also compatible with Louvretec's Spiral Pivot Opening Roof system! | 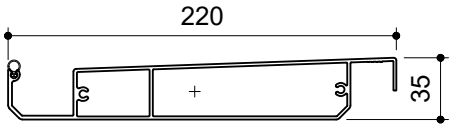<br>**Louvretec 220 retract slimline roof** | 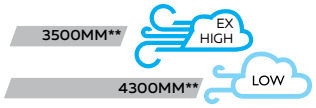<br>**3M ROOF HEIGHT |
| | 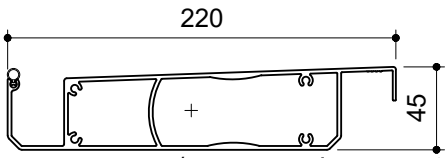<br>**Louvretec 220/45 retract alpine* roof**<br>*For larger spans, typically alpine and coastal locations | 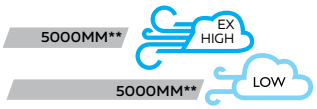<br>**3M ROOF HEIGHT |

## RETRACT ROOFS CONFIGURATION OPTIONS



**OPTION 1**

THREE SIDED FRAME - BLADES STACK TO REAR

- No front beam, blades stack to rear
- Can be even or uneven number of blades



**OPTION 2**

FOUR SIDED FRAME - BLADES STACK TO ONE END

- Blades can stack to either one end
- Can be even or uneven number of blades

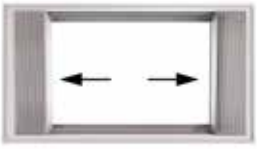

**OPTION 3**

FOUR SIDED FRAME - BLADES STACK AT EACH END

- Blades split stack from centre to each end
- Must be even number of blades



**OPTION 4**

FOUR SIDED FRAME - DOUBLE RETRACT (MID-BEAM MAY BE REQUIRED)

- Two Retracts meeting at mid-beam
- No mid-beam gutter required, blades close onto mid-beam flashing
- Blades stack from centre to each end
- Can be even or uneven number of blades
- Maximum length; up to 13.734mm



©Louvretec 2025 – All Rights Reserved. Technical specifications subject to change without notice.

RETRACT ROOFS **CONFIGURATION**

OPTION 1: 3 SIDED FRAME, BLADES STACK TO REAR



3 SIDED FRAME, BLADES IN CLOSED POSITION



3 SIDED FRAME, BLADES STACK TO REAR

©Louvretec 2025 – All Rights Reserved. Technical specifications subject to change without notice.

RETRACT ROOFS **CONFIGURATION** OPTION 2: 4 SIDED FRAME, BLADES STACK TO ONE END



4 SIDED FRAME, BLADES IN CLOSED POSITION



4 SIDED FRAME, BLADES STACK TO ONE END



©Louvretec 2025 – All Rights Reserved. Technical specifications subject to change without notice.

RETRACT ROOFS **CONFIGURATION**

## OPTION 3: 4 SIDED FRAME, BLADES STACK TO BOTH ENDS



4 SIDED FRAME, BLADES IN CLOSED POSITION



4 SIDED FRAME, BLADES STACK EVENLY TO BOTH ENDS

©Louvretec 2025 – All Rights Reserved. Technical specifications subject to change without notice.

RETRACT ROOFS **CONFIGURATION**

## OPTION 4: 4 SIDED FRAME, DOUBLE RETRACT WITH MID-BEAM BLADES STACK EVENLY OR UNEVENLY TO BOTH ENDS



4 SIDED FRAME, DOUBLE RETRACT WITH MID BEAM, BLADES IN CLOSED POSITION



4 SIDED FRAME, DOUBLE RETRACT WITH MID BEAM, BLADES STACKED EVENLY OR UNEVENLY TO BOTH ENDS



©Louvretec 2025 – All Rights Reserved. Technical specifications subject to change without notice.



# **Louvretec** 220 **retract slimline*** **roof**

**Each blade top tapers to 35mm high. Also Spiral Pivot Opening Roof compatible*



OUTSIDE IN YOUR COMFORT ZONE
BY LOUVRETEC SYDNEY NORTH



Louvretec 220 retract slimline roof blade



LOUVRETEC MULTI-CHANNEL CONTROLLER
Custom programmed.

SURFACE FINISHING OPTIONS
A wide range of options are available.

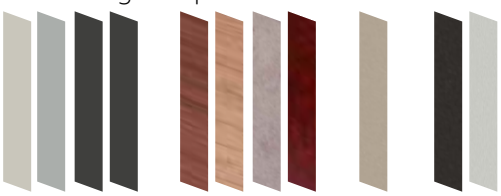

POWDERCOAT WOODGRAIN & SPECIAL FINISHES METALLIC ANODISED

## Smart, sleek and multi-purpose

The multi-purpose Louvretec 220 retract slimline roof combines sleek, clean modern design along with excellent spanning capacity. Because the Louvretec 220 retract slimline roof blade is compatible with not only the Retract system but also as a Spiral Pivot Opening Roof it's a great choice for large, multi-roof projects.

## Key Features

- Each blade top-tapers to 35mm high
- Sleek, functional design, clean and uncluttered when open or closed
- Design strength of an extruded double box-section
- Blade is compatible as a Spiral Pivot Opening Roof, great for multi-roof projects
- Somfy powered
- "Cushion Closing" onto a bulb seal strip
- Increased closing cover angle for added weather protection
- Larger blade gutter incorporated for extra storm-water dispersal

## Clean uncluttered lines

At only 35mm high with a tapering topside, the blades stack superbly and cast minimal shadow when in use.

All the operating mechanism, electronics and motors are incorporated within the side frame extrusions, completely hidden from sight and protected from the weather.

Louvretec Retract Roofs are factory assembled, tested and calibrated as part of the manufacturing process. They come to site pre-wired ready for the electrician to connect through a standard junction box.

©Louvretec 2025 – All Rights Reserved. Technical specifications subject to change without notice.



## BLADE SPECIFICATIONS Louvretec 220 retract slimline roof blade

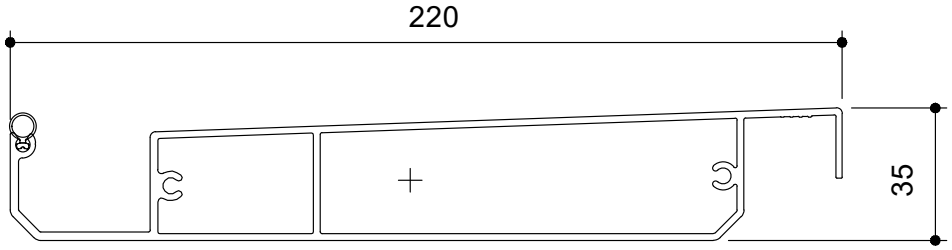


NTS

| BLADE SPECIFICATIONS | | | |
|---|---|---|---|
| Blade cover - opening system | 205 mm | Weight per linear metre - opening system | 2.655 kg/lm |
| Weight per square metre - opening system | 12.9 kg/sqm | Actual blade width | 220 mm |
| Blade centres - opening system | 205 mm | | |

SPANS AT A GLANCE: Refer Engineering Section.

| WIND ZONE | INSIDE | LOW | MEDIUM | HIGH | VERY HIGH | EXTRA HIGH |
|---|---|---|---|---|---|---|
| Factored wind speed at building | Self wt | 32 m/s | 37m/s | 44 m/s | 50 m/s | 55 m/s |
| | | 115 km/hr | 133 km/hr | 158 km/hr | 179 km/hr | 198 km/hr |
| Louvretec 220 retract slimline roof **3m Height** | 4300 | 4300 | 4300 | 4200 | 4000 | 3500 |
| Louvretec 220 retract slimline roof **6m Height** | | 4300 | 4300 | 4050 | 3500 | 3150 |

## TYPICAL CROSS SECTIONS



Louvretec 220 retract slimline roof
BLADES OPEN

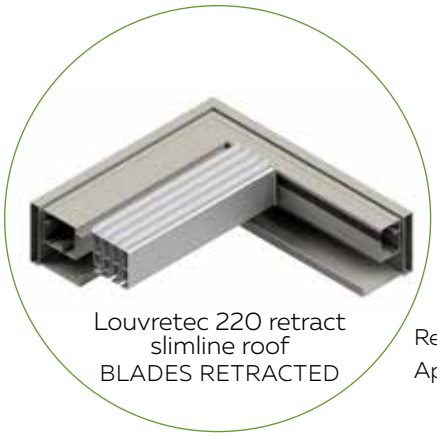

Louvretec 220 retract slimline roof
BLADES RETRACTED

Retracted area:
Approx. 25% of opening

TO CALCULATE EXACT OPENING SIZES FOR RETRACT SYSTEM
REFER TO PAGES 3.24 - 3.35 (DEPENDING ON FRAME CHOICE) IN THIS SECTION


©Louvretec 2025 – All Rights Reserved. Technical specifications subject to change without notice.

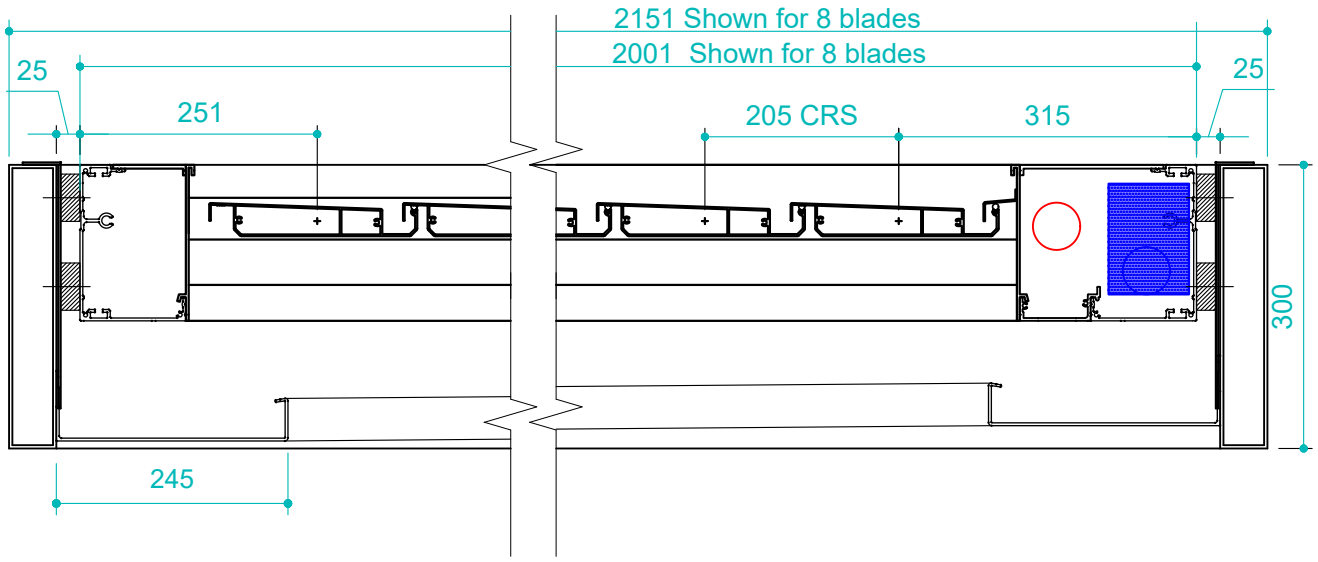


CROSS SECTION THROUGH BLADES
THIS DIMENSION IS CRITICAL AND IS DETERMINED BY THE NUMBER OF BLADES USED AND THE CONFIGURATION OF THE RETRACT ROOF

FOR RETRACT BLADE CALCULATION SHEETS
REFER TO PAGES 3.24 - 3.35 (DEPENDING ON FRAME CHOICE) IN THIS SECTION

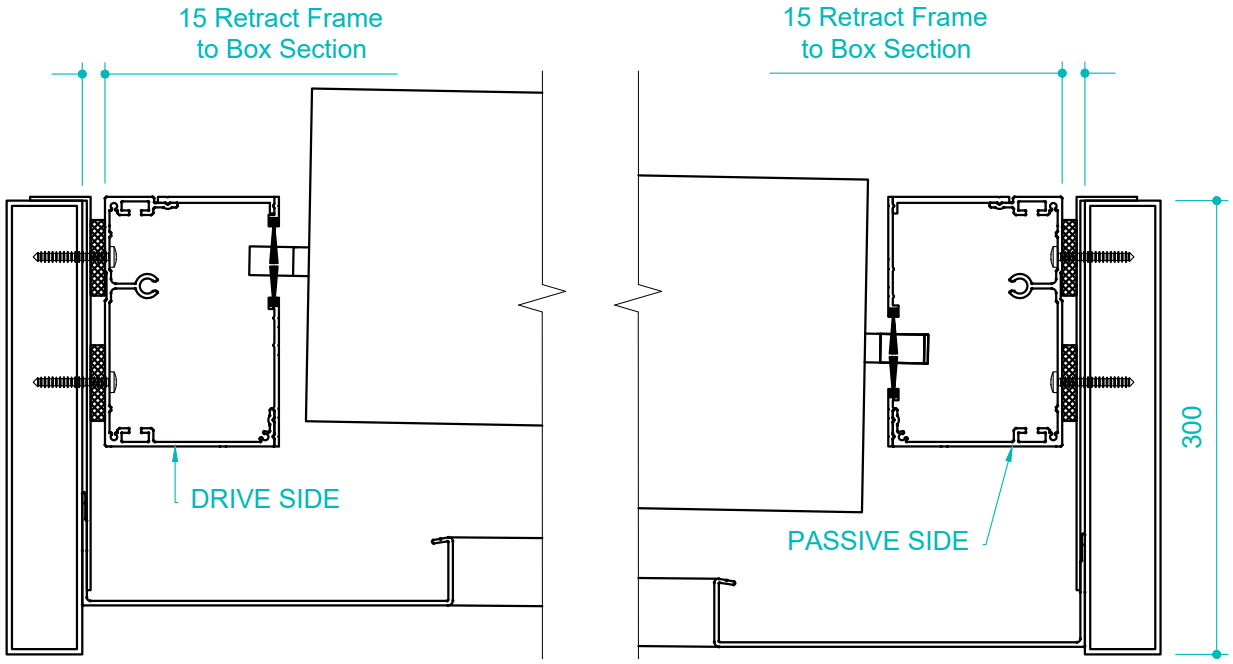


CROSS SECTION RUNNING WITH BLADES
THIS DIMENSION IS FLEXIBLE AND LIMITED ONLY BY SPANNING CAPABILITY OF RETRACT BLADE

FOR RETRACT BLADE SPAN CHART
REFER TO PAGES 3.12 IN THIS RETRACT ROOF SECTION


©Louvretec 2025 – All Rights Reserved. Technical specifications subject to change without notice.



# **Louvretec** 220/45 **retract alpine*** **roof**

**For larger spans, typically alpine and coastal locations*

## Outstanding span and multi-purpose

The Louvretec 220/45 retract alpine* roof leads the way with outstanding spanning capabilities making it ideal for high wind zones and alpine regions.

This retract roof is a larger spanning version of the 220 retract slimline roof.

## Key Features

- Winner of the Window Shading Association of Australia (WSAA) Product Innovation Award, 2026
- This louvre blade is compatible as a retract roof as well as a Spiral Pivot Roof system, making it a perfect solution for multi-roof projects
- Sleek, functional design, clean and uncluttered when open or closed
- Design strength of an extruded double box-section
- Somfy powered
- "Cushion Closing" onto an external sun-resistant PVC bulb seal
- Increased closing cover angle for added weather protection
- Larger blade gutter incorporated for extra storm-water dispersal

## Market Leading Design

Motorised by powerful twin Somfy Tubular motors, a multi-purpose Louvretec controller comes as standard. The system can also be configured for home automation technology.

All the operating mechanism. Electronics and motors are incorporated within the side frame extrusions, completely hidden from sight and protected from the weather.

Louvretec Retracts are factory assembled, tested and calibrated as part of the manufacturing process. They come to site pre-wired ready for the electrician to connect through a standard junction box.



WAIPU COVE, NORTHLAND NZ



Louvretec 220/45 retract alpine* roof blade
Available Retract or Spiral Pivot

RETRACT



LOUVRETEC MULTI-CHANNEL CONTROLLER
Custom programmed.

SURFACE FINISHING OPTIONS
A wide range of options are available.

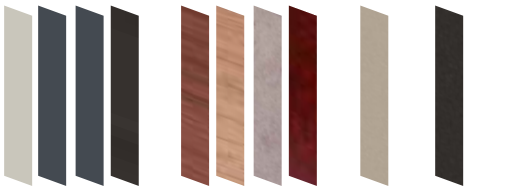

POWDERCOAT | WOODGRAIN & SPECIAL FINISHES | METALLIC | ANODISED



©Louvretec 2025 – All Rights Reserved. Technical specifications subject to change without notice.



## BLADE SPECIFICATIONS Louvretec 220/45 retract alpine* roof

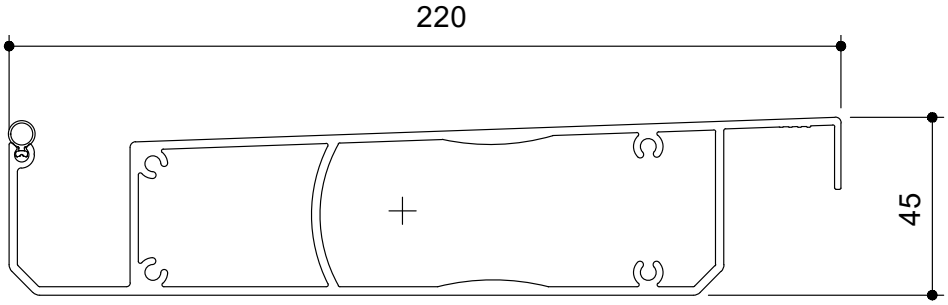


***For larger spans, typically alpine and coastal locations** NTS

| BLADE SPECIFICATIONS | | | |
|---|---|---|---|
| Blade cover - opening system | 205 mm | Weight per linear metre - opening system | 3.74 kg/lm |
| Weight per square metre - opening system | 18.2 kg/sqm | Actual blade width | 220 mm |
| Blade centres - opening system | 205 mm | | |

SPANS AT A GLANCE: Refer Engineering Section.

| WIND ZONE | INSIDE | LOW | MEDIUM | HIGH | VERY HIGH | EXTRA HIGH |
|---|---|---|---|---|---|---|
| Factored wind speed at building | Self wt | 32 m/s | 37m/s | 44 m/s | 50 m/s | 55 m/s |
| | | 115 km/hr | 133 km/hr | 158 km/hr | 179 km/hr | 198 km/hr |
| Louvretec 220/45 retract alpine* roof **3m Height** | 5000 | 5000 | 5000 | 5000 | 5000 | 5000 |
| Louvretec 220/45 retract alpine* roof **6m Height** | | 5000 | 5000 | 5000 | 5000 | 4700 |

## TYPICAL CROSS SECTIONS



Louvretec 220/45 retract alpine* roof
BLADES OPEN



Louvretec 220/45 retract alpine* roof
BLADES RETRACTED

Retracted area:
Approx. 25% of opening

TO CALCULATE EXACT OPENING SIZES FOR RETRACT SYSTEM
REFER TO PAGES 3.24 - 3.35 (DEPENDING ON FRAME CHOICE) IN THIS SECTION

SNOW LOADINGS
REFER ENGINEERING SECTION, PAGES 13.31 & 13.32

©Louvretec 2025 - All Rights Reserved. Technical specifications subject to change without notice.

**TYPICAL DETAIL : Cross sections Louvretec 220/45 retract alpine* roof, within 300x50 aluminium structural frame**

*For larger spans, typically alpine and coastal locations

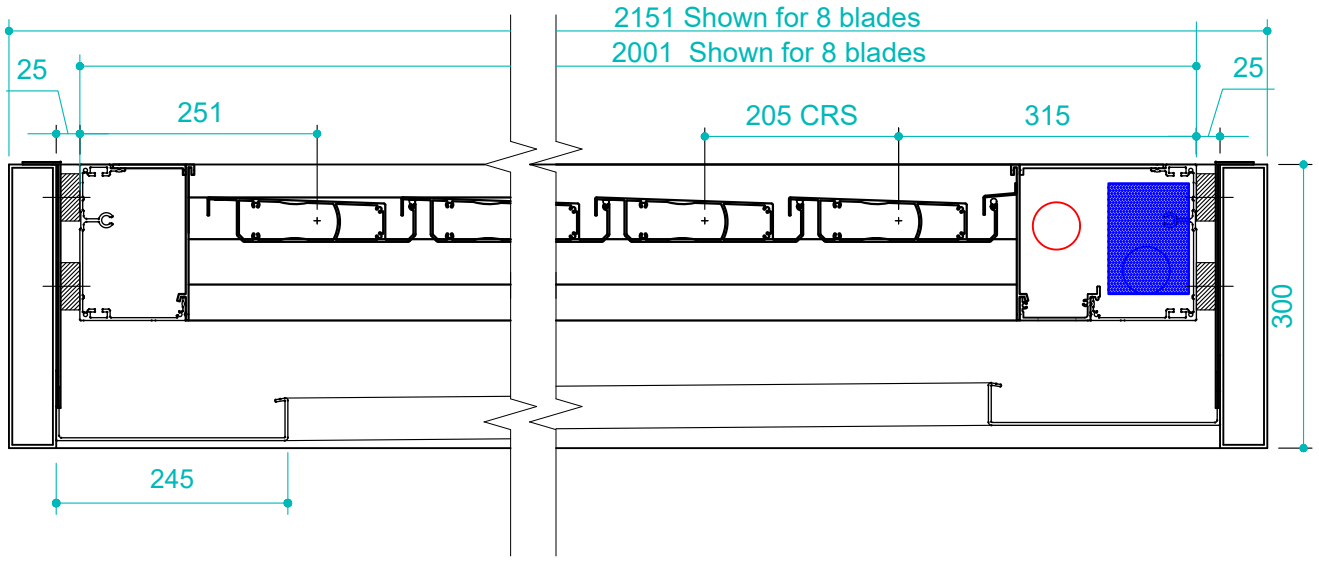


CROSS SECTION THROUGH BLADES

THIS DIMENSION IS CRITICAL AND IS DETERMINED BY THE NUMBER OF BLADES USED AND THE CONFIGURATION OF THE RETRACT ROOF.

FOR RETRACT BLADE CALCULATION SHEETS

REFER TO PAGES 3.24 - 3.35 (DEPENDING ON FRAME CHOICE) IN THIS SECTION

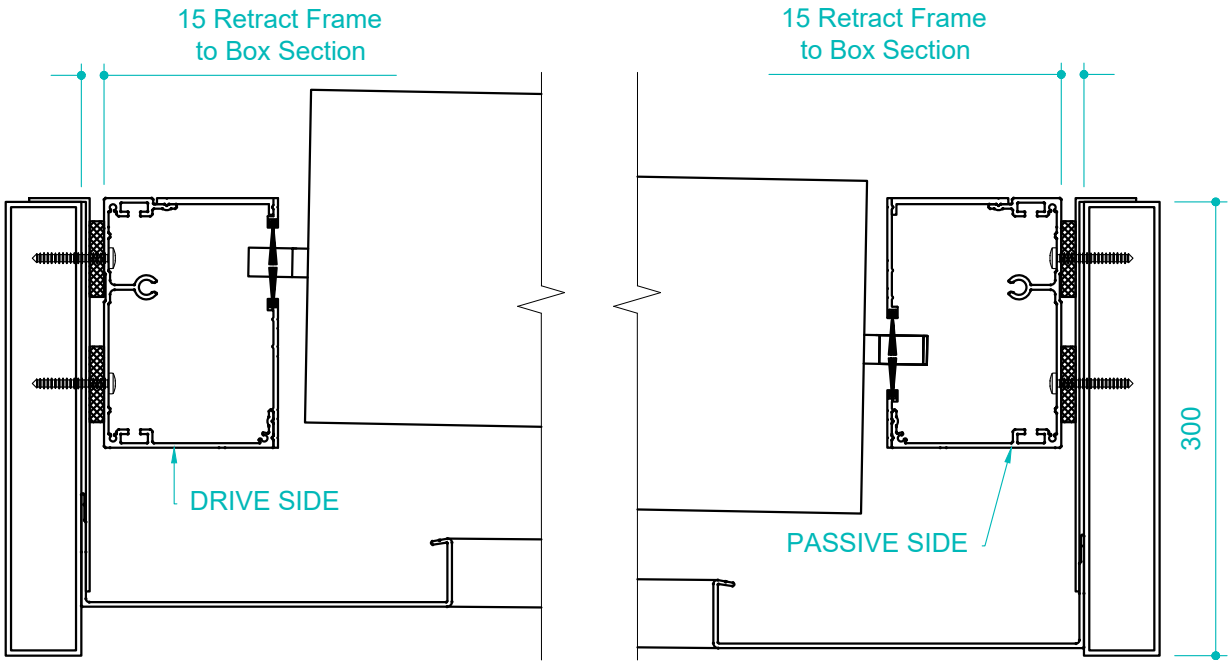


CROSS SECTION RUNNING WITH BLADES

THIS DIMENSION IS FLEXIBLE AND LIMITED ONLY BY SPANNING CAPABILITY OF RETRACT BLADE.

FOR RETRACT BLADE SPAN CHART

REFER TO PAGE 3.15 IN THIS RETRACT ROOF SECTION



FILE: RETRACT 3.16

DATE MODIFIED: 01/10/2026 SCALE:

www.louvretec.co.nz www.louvretec.com.au

©Louvretec 2025 - All Rights Reserved. Technical specifications subject to change without notice.

## TYPICAL DETAIL: Louvretec 220/45 retract alpine* roof, within Louvretec structural frame

*For larger spans, typically alpine and coastal locations

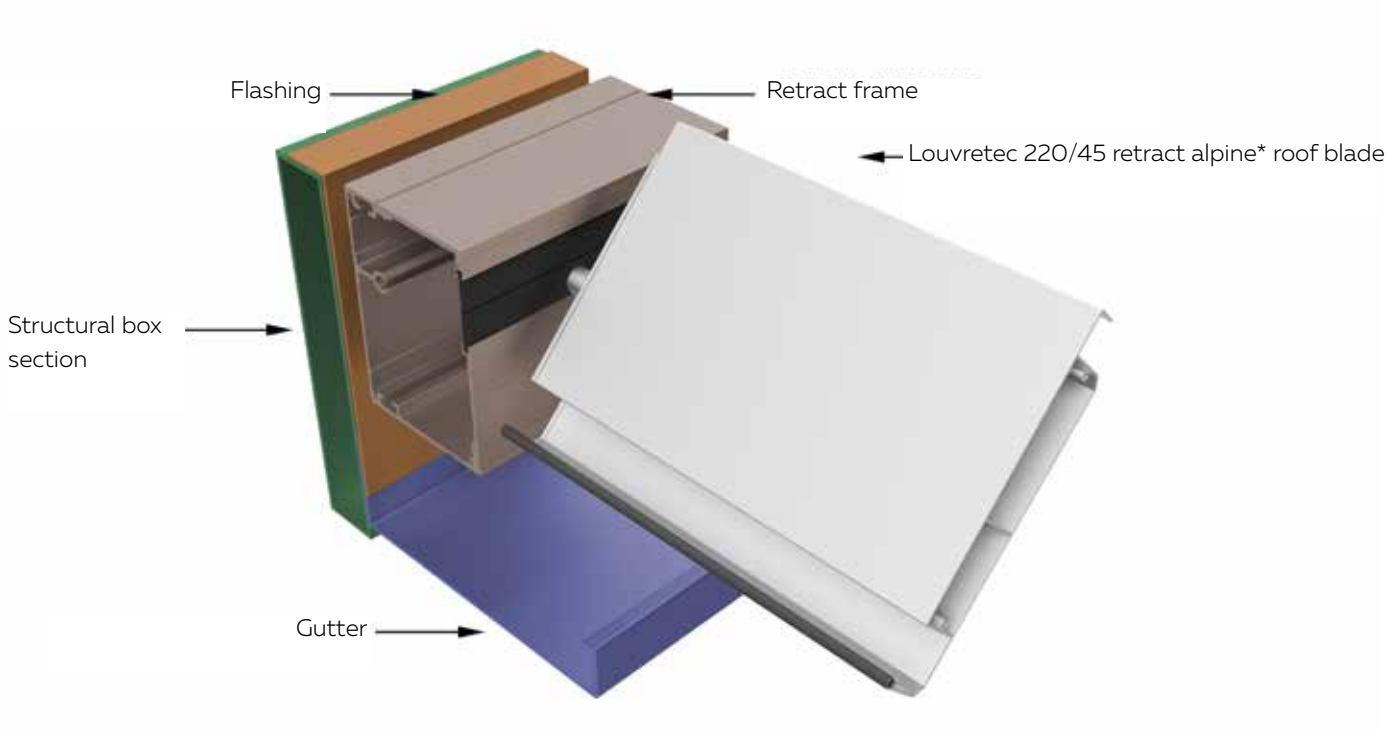


CROSS SECTION SHOWING DRIVE FRAME, BLADE, GUTTER & FLASHING WITHIN 300X50 BOX SECTION FRAME

## TYPICAL DETAIL : FALL & CLEARANCES ON RETRACT BLADES

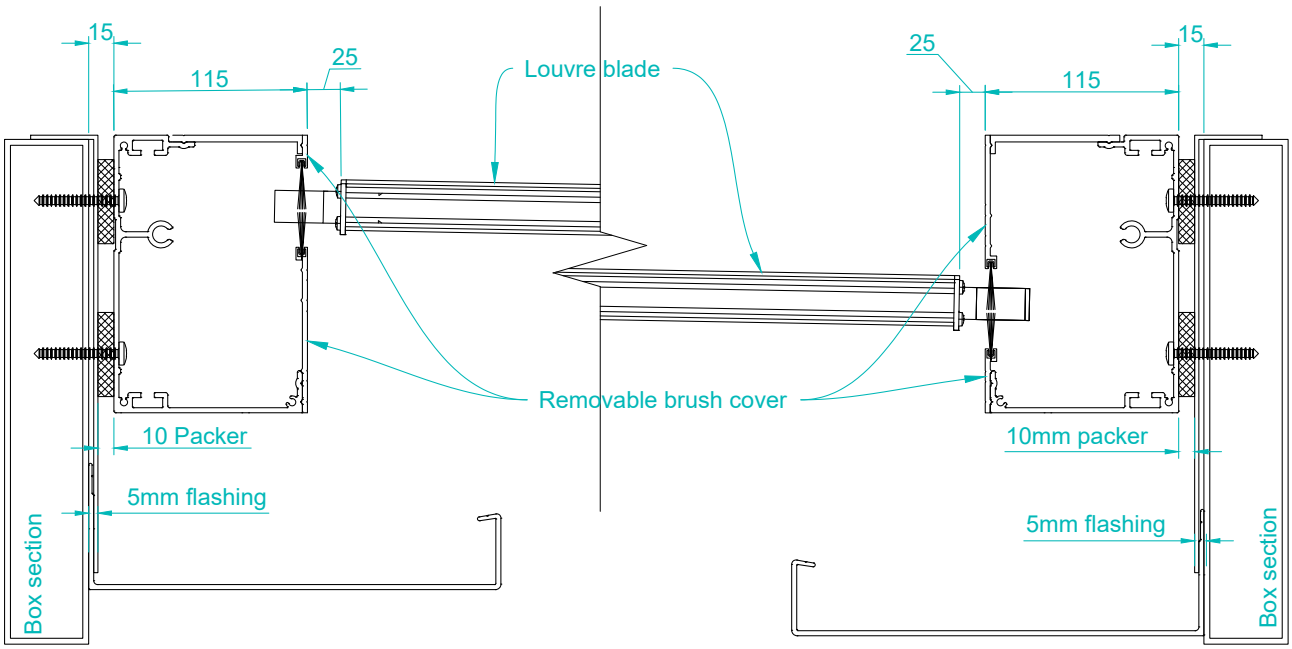


DRIVE SIDE
HIGH SIDE OF BLADE

PASSIVE SIDE
LOW SIDE OF BLADE

RETRACT ROOFS ARE TYPICALLY INSTALLED LEVEL
FALL ACROSS THE BLADES IS ACHIEVED WITH THE BLADES SET HIGHER ON THE DRIVE SIDE, FALLING 60mm TO THE PASSIVE SIDE.

60mm FALL IS COMMON ON ALL RETRACTS IRRESPECTIVE OF BLADE LENGTH.


©Louvretec 2025 – All Rights Reserved. Technical specifications subject to change without notice.



# PITCHED RETRACT ROOFS

## A Pitched Retract Roof is now available

- Retract Roofs can now be installed on a pitch of up to 15 degrees slope
- Blades must run in the same direction as the roof pitch
- Blades can be stacked evenly to both ends or all LH end/all RH end
- Refer technical cross-section details on page 3.19 showing typical Pitched Roof Flashing details.



LETS GET PITCHED





©Louvretec 2025 – All Rights Reserved. Technical specifications subject to change without notice.

TECHNICAL DETAILS: PLAN VIEW

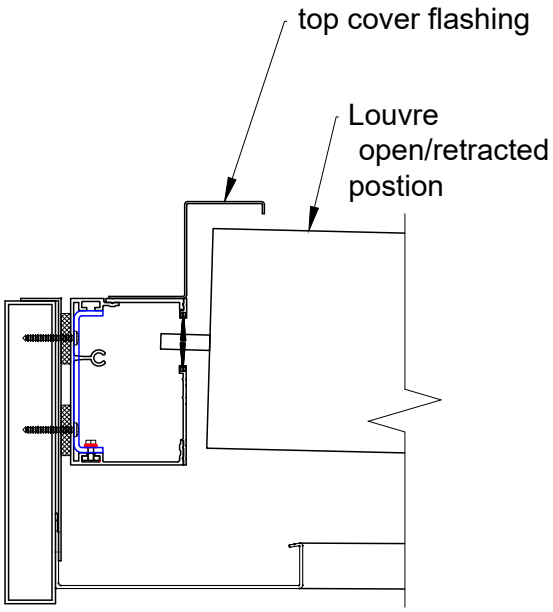


Section A-A

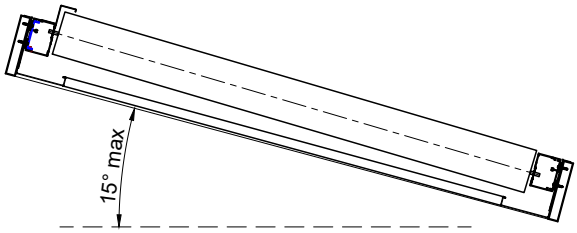


Maximum pitch up to °15
Section B-B

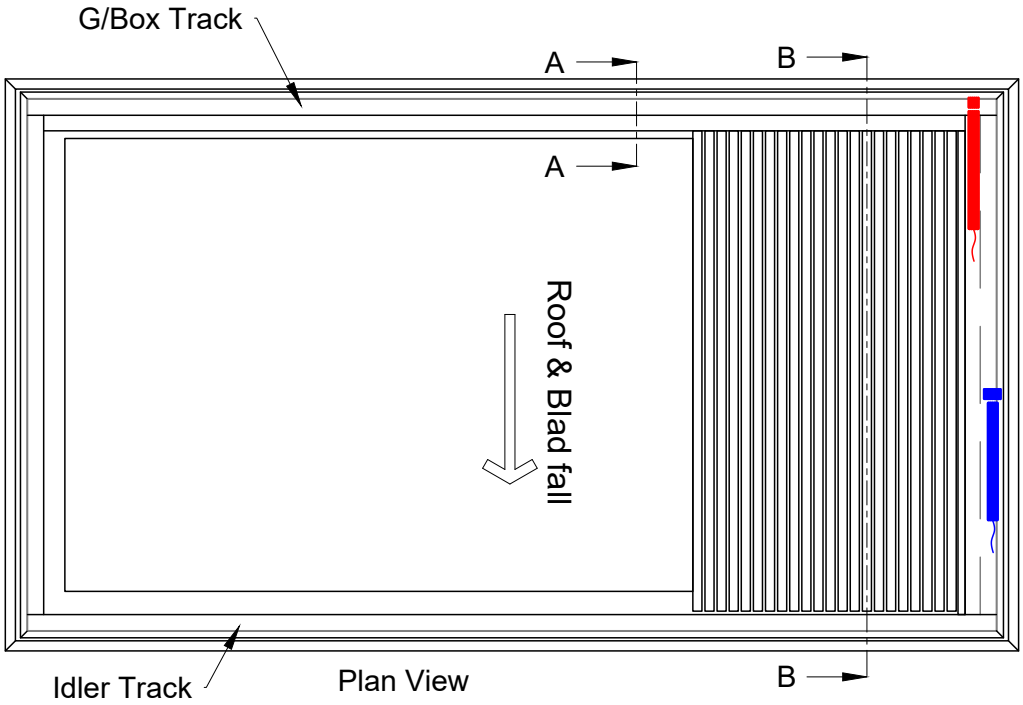



©Louvretec 2025 – All Rights Reserved. Technical specifications subject to change without notice.

## TYPICAL DETAIL : RETRACT ROOF EXTRUSIONS

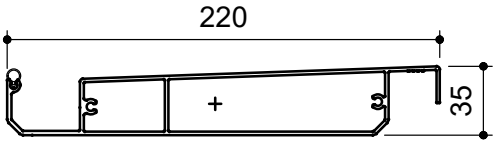


**Louvretec 220 retract slimline roof**

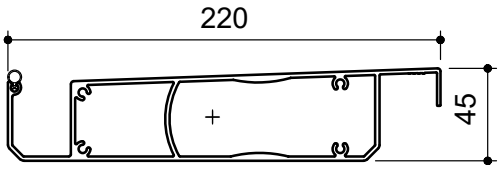


**Louvretec 220/45 retract alpine* roof**

*For larger spans, typically alpine and coastal locations

Removable Cover for Motor Frame

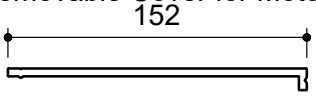


Removable Cover for End Fixing

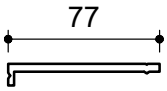


260x40 Flashing

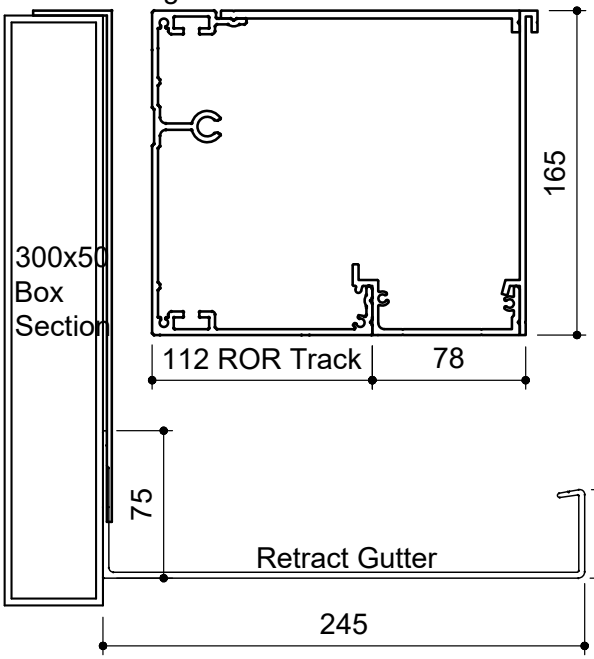


End Cover, fits to both Extended Motor Frame & End Frame

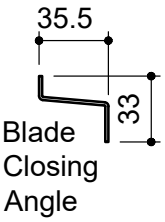


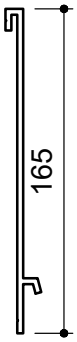


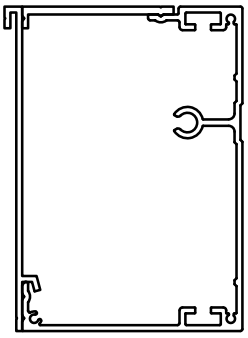

End Frame with End Covers Installed

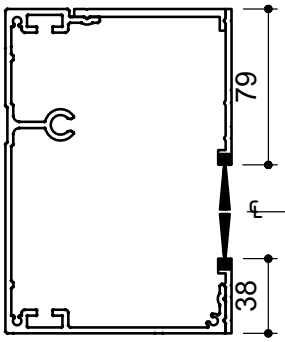


Passive Frame Assembly with Brush Covers installed

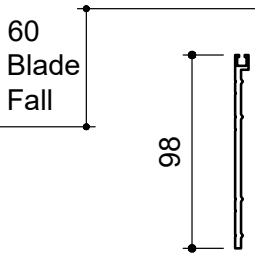


Brush Cover Cuts to 4 different sizes for Drive & Passive Frames Assemblies

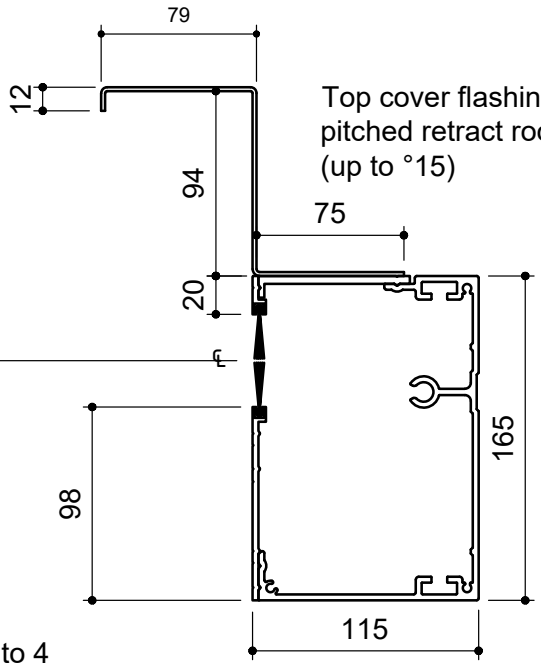


Top cover flashing for pitched retract roofs (up to °15)

Drive Frame Assembly with Brush Covers installed




©Louvretec 2025 - All Rights Reserved. Technical specifications subject to change without notice.





# TWO MOTORS FOR TWO FUNCTIONS

Louvretec's Retract Roofs have two operating functions, each controlled by separate Somfy 25Nm motors

## Motor 1 - Retract Motor

This Motor Retracts | Extends the Louvre Blades

## Motor 2 - Rotate motor

This Motor functions like a standard Opening Roof - rotating the Louvre Blades between 0 to 135°

## Fall on blades

This is determined by the location of the **Rotate Motor** which is always located on the high side of the Blade. Fall on Blades is always 60mm from Drive Side down to Passive Side.



ROTATE MOTOR &
RETRACT DRIVE SHAFT

TECHNICAL DETAILS **RETRACT & ROTATE TWIN MOTORS - 3 SIDED FRAME**

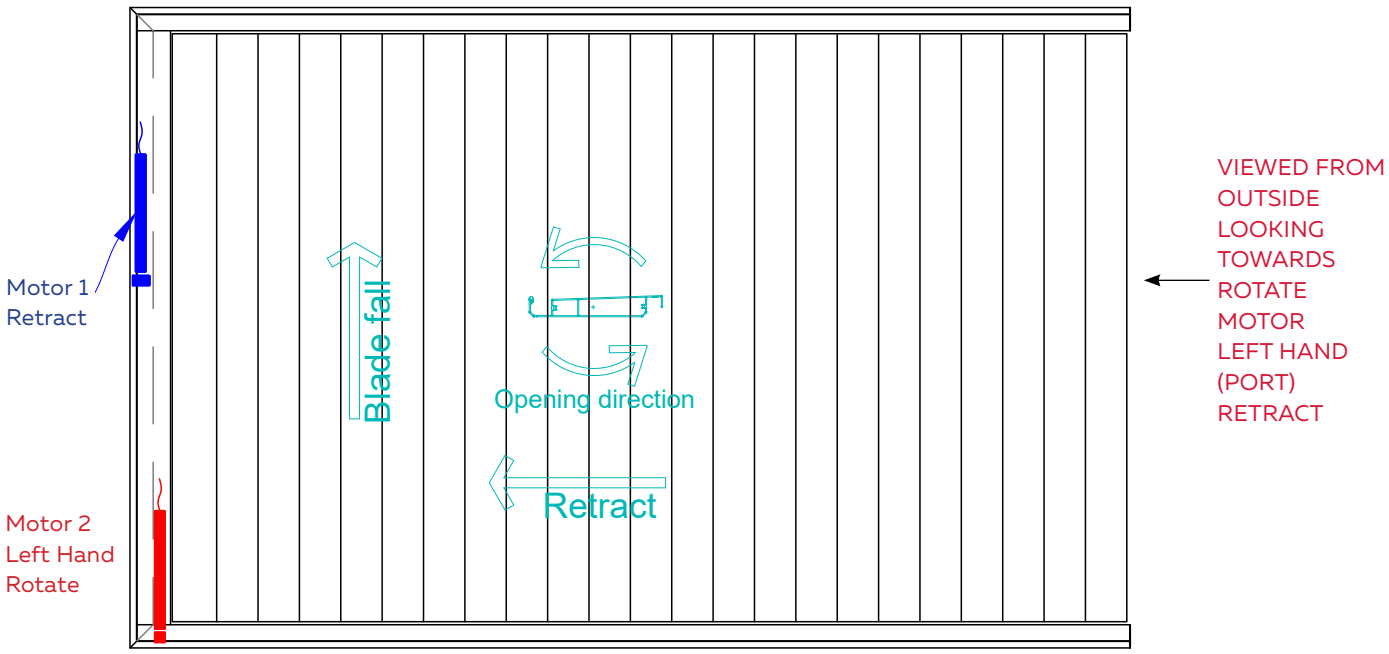


©Louvretec 2025 - All Rights Reserved. Technical specifications subject to change without notice.

## TECHNICAL DETAILS **RETRACT & ROTATE TWIN MOTORS - 4 SIDED FRAME**

### 4 SIDED FRAME

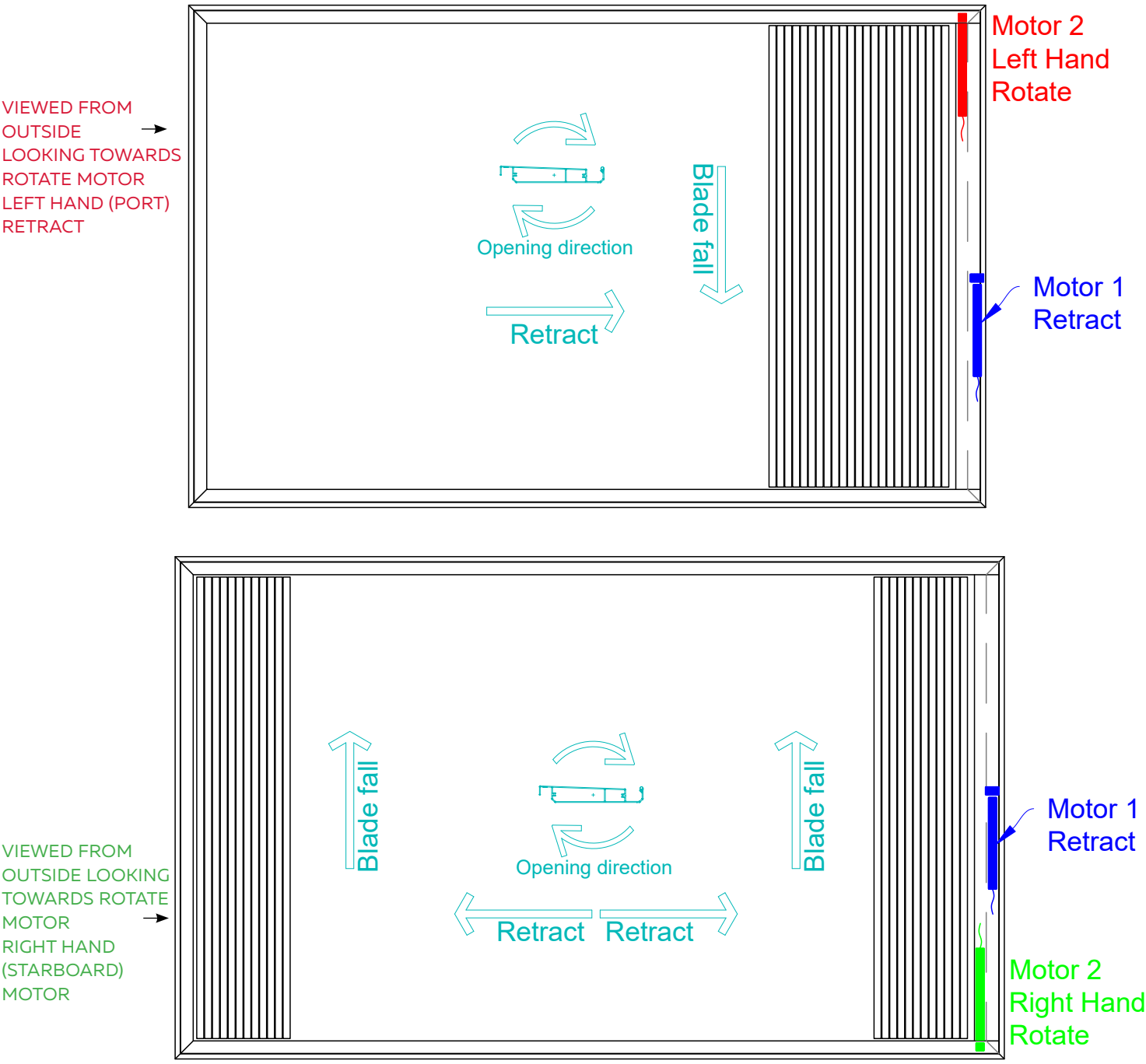


## Fall on blades

This is determined by the location of the **Rotate Motor** which is always located on the high side of the blade.
REFER TO ILLUSTRATIONS ON THIS PAGE
(LEFT HAND - PORT) or
(RIGHT HAND - STARBOARD)
as viewed from outside looking towards the motor.


©Louvretec 2025 – All Rights Reserved. Technical specifications subject to change without notice.

## TECHNICAL DETAILS **WIRE POSITIONS FOR RUNNING POWER TO CONTROLLER**

- When preparing to run power to the Retract, plan to enter the frame approximately 300mm away from the motor corner (the controller side) and 100mm down from the top.
- Leave enough excess cable to reach the middle of the frame.
- Protect the wire from sharp metal edges by using flex conduit or other suitable sheathing.
- A local isolation switch is required.

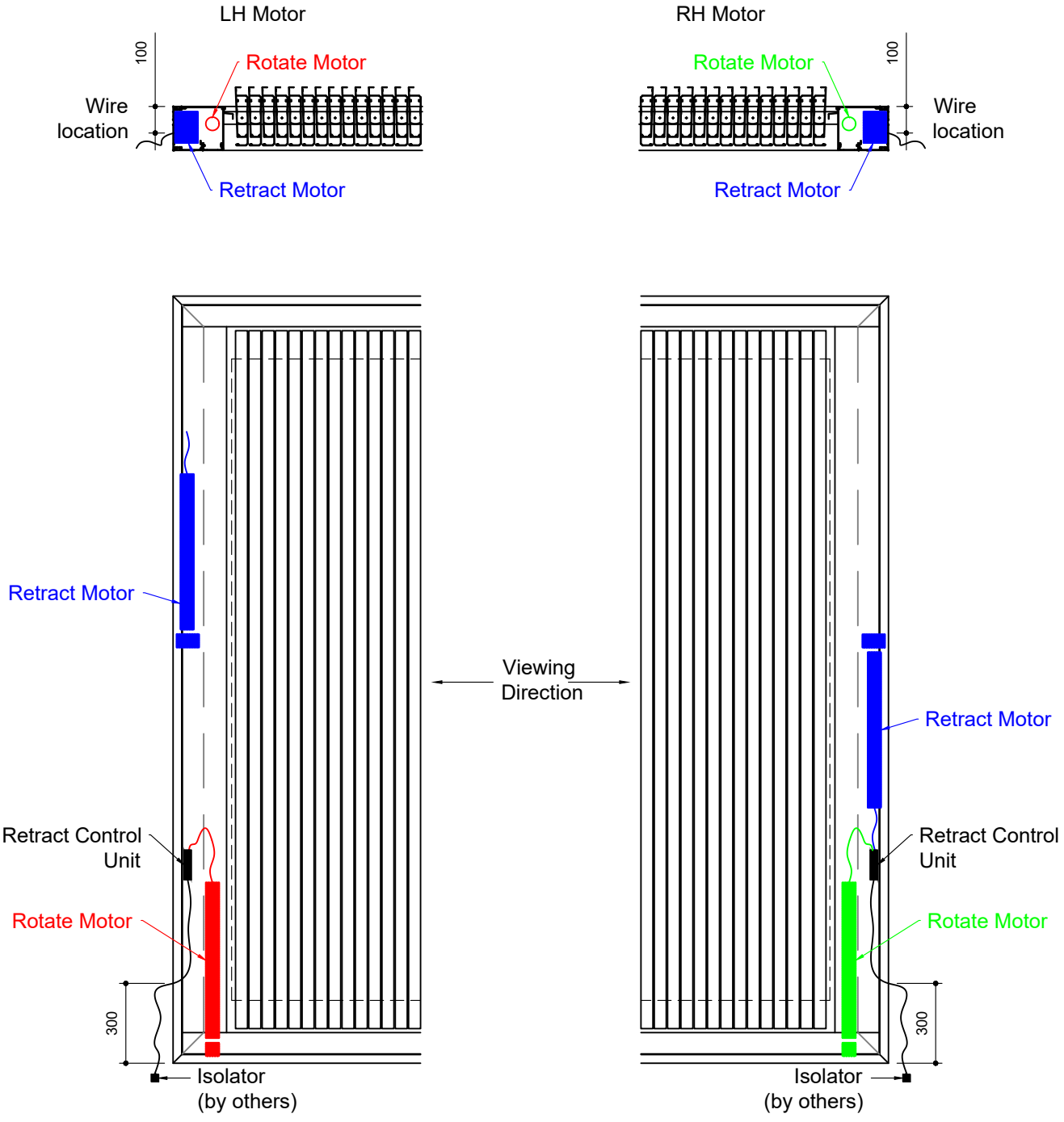


©Louvretec 2025 – All Rights Reserved. Technical specifications subject to change without notice.

CONFIGURATIONS **OPTION 1: 3 SIDED FRAME**

## CALCULATING RETRACT FRAME SIZES

The overall length of a Louvretec Retract Roof is a module size pre-determined by the frame configuration, ie: 3 sided frame or 4 sided frame plus the number of blades.

**OPTION 1: THREE SIDED FRAME**

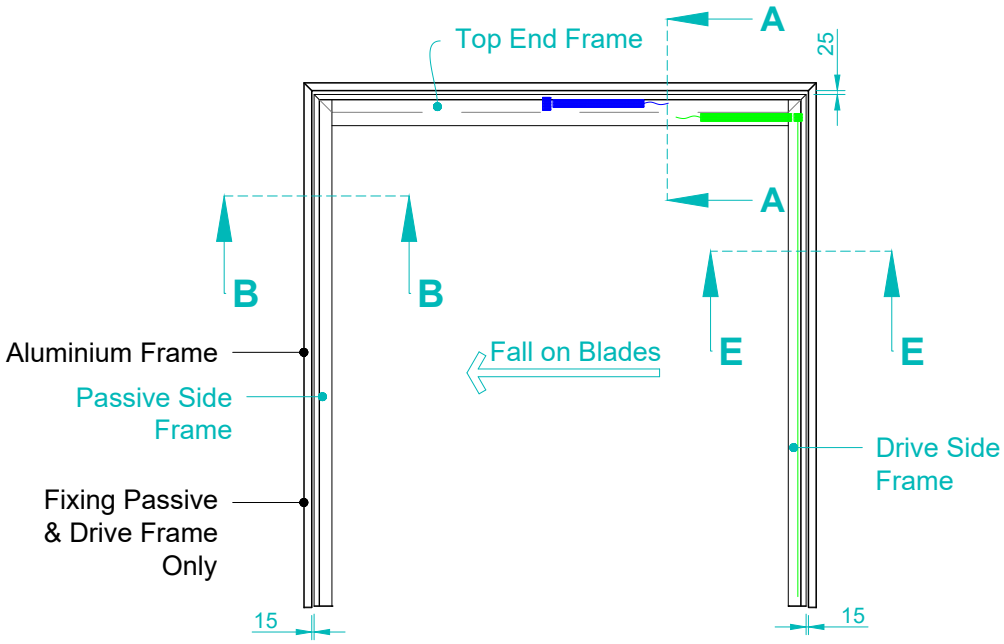


FOR RETRACT THREE SIDED BLADE CALCULATIONS SHEETS REFER TO PAGES 3.23 - 3.24 IN THIS SECTION

These sizes cannot be varied or altered. Take great care when site measuring and calculating frame length.

On a 4 sided frame additional room is required to site assemble the mitred corners, therefore 15mm spacing is allowed for sides with 25mm spacing allowed on the top and bottom frames.

Due to the additional depth required with a Retract Roof a 300x50 aluminium box section is the standard structural outer frame.

15mm SPACING
= 10mm PACKER = 5mm FLASHING

25mm SPACING
= 20mm PACKER + 5mm FLASHING

TYPICAL ALLOWANCE FOR PACKERS ON A 3 SIDED FRAME

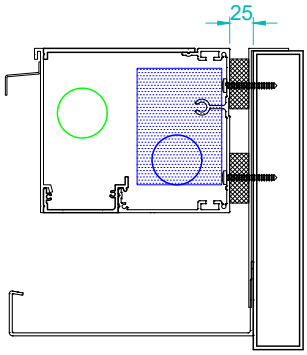


Section A-A
Top End Frame

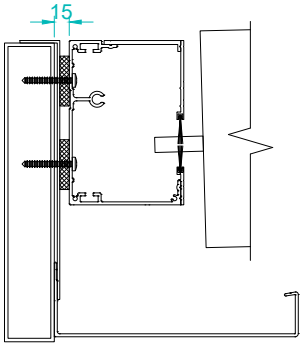


Section B-B
Passive Side Frame

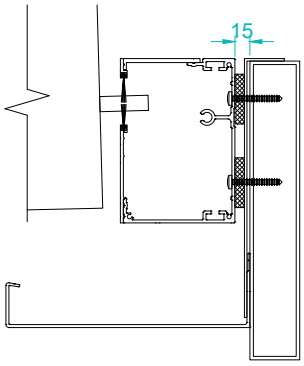


Section E-E
Drive Side Frame



©Louvretec 2025 – All Rights Reserved. Technical specifications subject to change without notice.

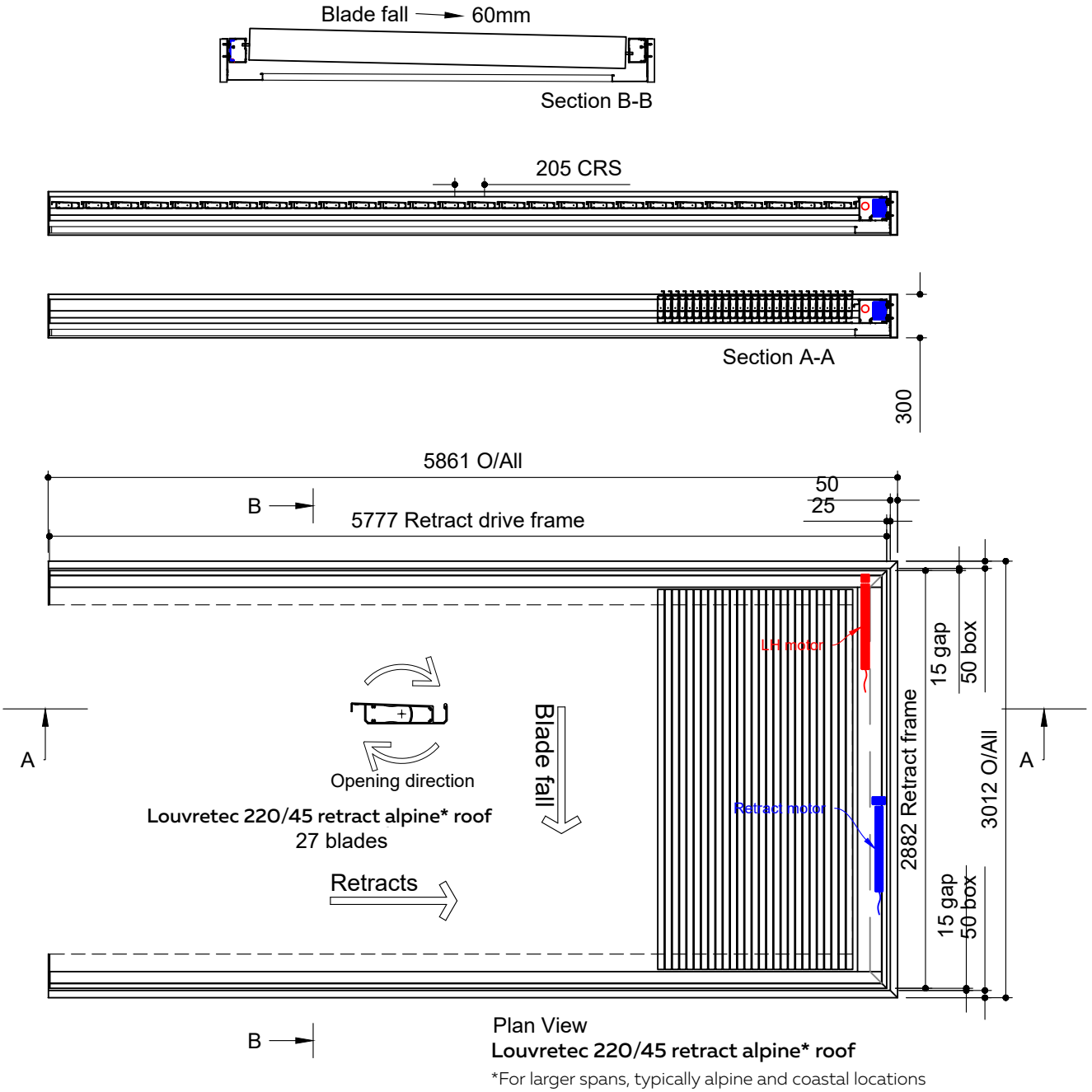


Plan View
**Louvretec 220/45 retract alpine* roof**
*For larger spans, typically alpine and coastal locations

EXAMPLE: 27 BLADES, 3 SIDED RETRACT ROOF SITTING WITHIN 300X50 ALUMINIUM BOX SECTION FRAME. BLADES STACK TO ONE END.

FOR RETRACT BLADE CALCULATION SHEET
REFER TO PAGE 3.26 IN THIS RETRACT ROOF SECTION

## TYPICAL DETAIL : 3 SIDED RETRACT ROOF
## WITH AND WITHOUT STRUCTURAL BOX FRAME

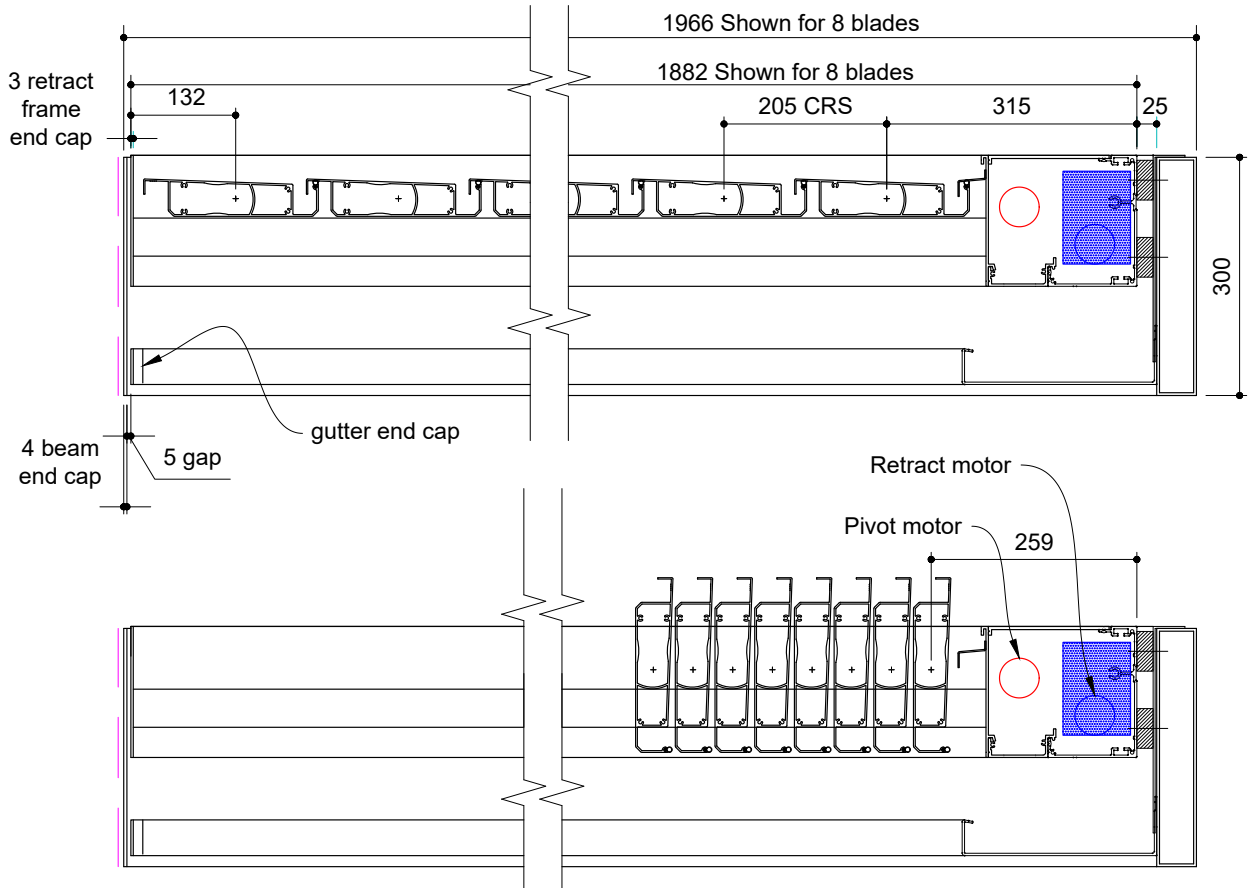


| Retract module sizes with Somfy Motors | | | |
|---|---|---|---|
| Retract Frame 3 sides | | | |
| | | Fitting into frame by others | Including our 300x50 Frame |
| No of Blades | Retract Drive & Passive Frames | Clearance +25 | Box Frame +50 Box End Cap +9 |
| 8 | 1882 | 1907 | 1966 |
| 9 | 2087 | 2112 | 2171 |
| 10 | 2292 | 2317 | 2376 |
| 11 | 2497 | 2522 | 2581 |
| 12 | 2702 | 2727 | 2786 |
| 13 | 2907 | 2932 | 2991 |
| 14 | 3112 | 3137 | 3196 |
| 15 | 3317 | 3342 | 3401 |
| 16 | 3522 | 3547 | 3606 |
| 17 | 3727 | 3752 | 3811 |
| 18 | 3932 | 3957 | 4016 |
| 19 | 4137 | 4162 | 4221 |
| 20 | 4342 | 4367 | 4426 |
| 21 | 4547 | 4572 | 4631 |
| 22 | 4752 | 4777 | 4836 |
| 23 | 4957 | 4982 | 5041 |
| 24 | 5162 | 5187 | 5246 |
| 25 | 5367 | 5392 | 5451 |
| 26 | 5572 | 5597 | 5656 |
| 27 | 5777 | 5802 | 5861 |
| 28 | 5982 | 6007 | 6066 |
| 29 | 6187 | 6212 | 6271 |
| 30 | 6392 | 6417 | 6476 |
| 31 | 6597 | 6622 | 6681 |
| 32 | 6802 | 6827 | 6886 |



©Louvretec 2025 – All Rights Reserved. Technical specifications subject to change without notice.

## CALCULATING RETRACT FRAME SIZES

The overall length of a Louvretec Retract Roof is a module size pre-determined by the frame configuration, ie: 3 sided frame or 4 sided frame plus the number of blades.

**OPTION 2: FOUR SIDED FRAME**

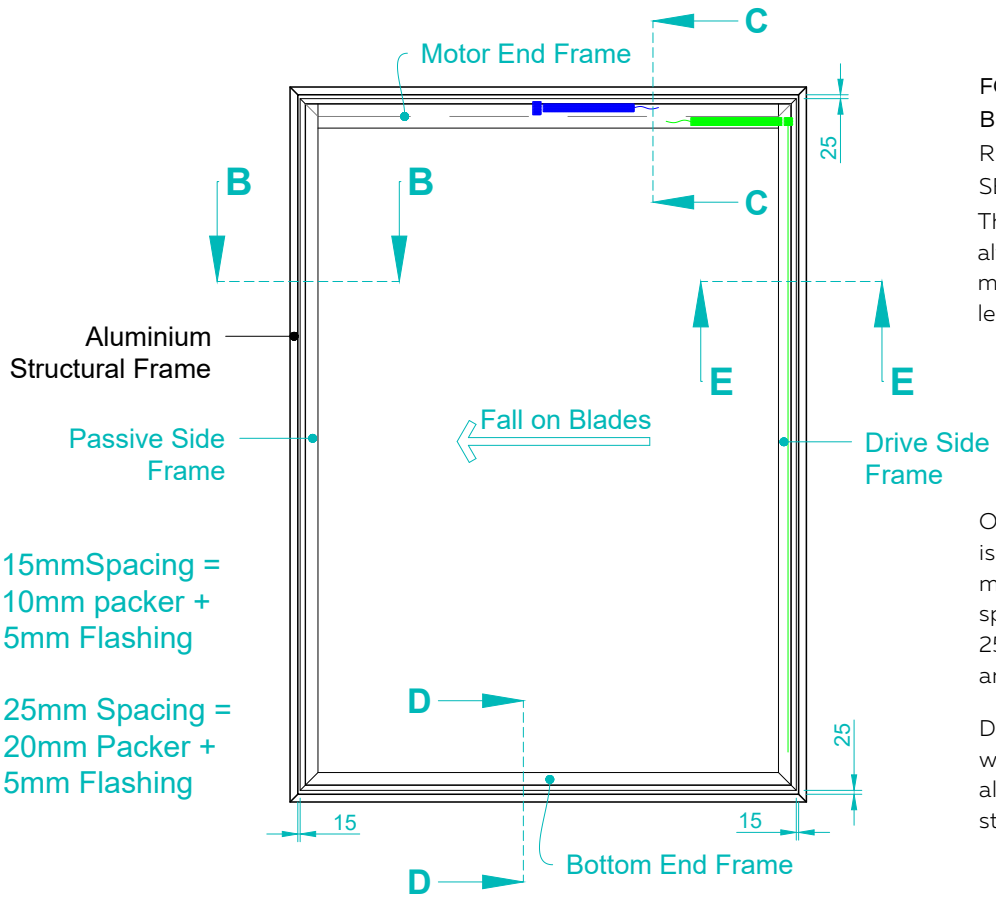


FOR RETRACT FOUR SIDED BLADE CALCULATIONS SHEETS REFER TO PAGES 3.30 - 3.35 IN THIS SECTION

These sizes cannot be varied or altered. Take great care when site measuring and calculating frame length.

On a 4 sided frame additional room is required to site assemble the mitred corners, therefore 15mm spacing is allowed for sides with 25mm spacing allowed on the top and bottom frames.

Due to the additional depth required with a Retract Roof a 300x50 aluminium box section is the standard structural outer frame.

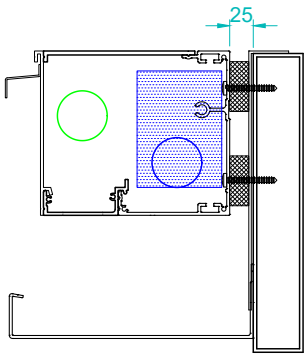


Section C-C
Top End Frame

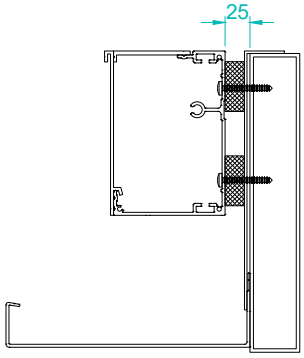


Section D-D
Bottom End Frame

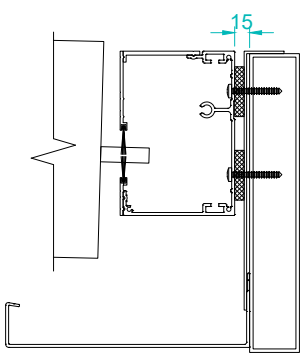


Section B-B
Passive Side Frame

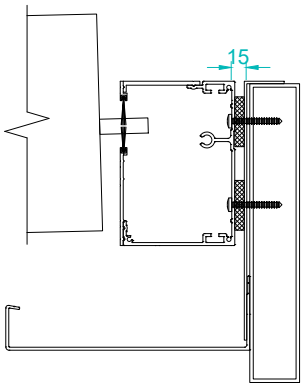


Section E-E
Drive Side Frame

©Louvretec 2025 - All Rights Reserved. Technical specifications subject to change without notice.

## TYPICAL DETAIL : 4 SIDED RETRACT ROOF
## WITHIN 300X50 ALUMINIUM STRUCTURAL FRAME, BLADES STACK TO ONE END

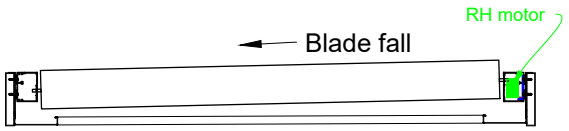


Section B-B

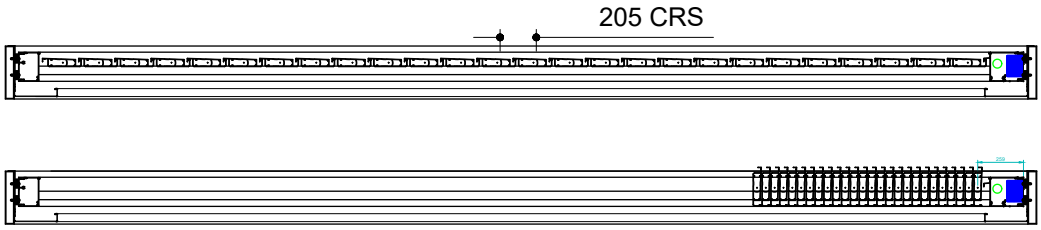


Section A-A

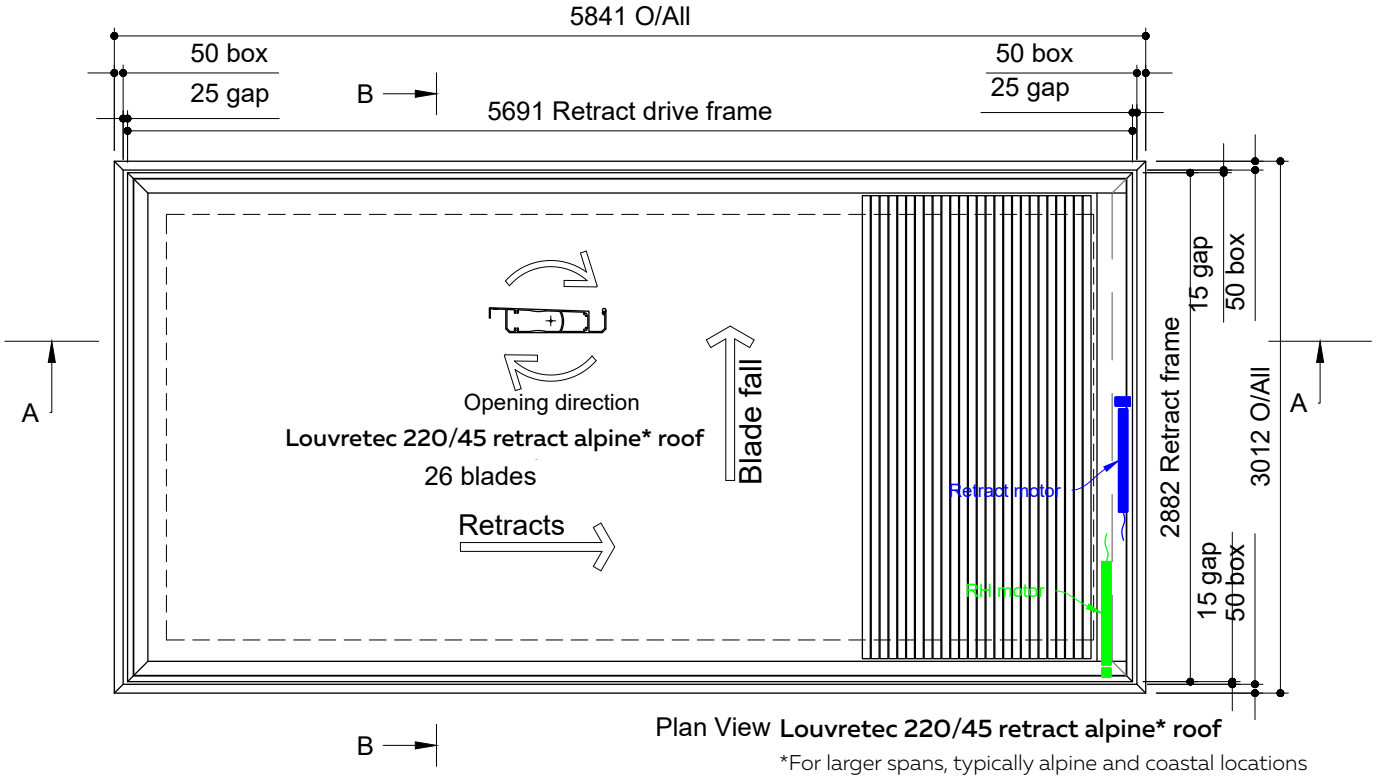


Plan View **Louvretec 220/45 retract alpine* roof**

*For larger spans, typically alpine and coastal locations

EXAMPLE: 26 BLADES, 4 SIDED RETRACT ROOF SITTING WITHIN 300X50 ALUMINIUM STRUCTURAL FRAME. BLADES STACK TO ONE END.

FOR RETRACT BLADE CALCULATION SHEET
REFER TO PAGE 3.29 IN THIS RETRACT ROOF SECTION


©Louvretec 2025 - All Rights Reserved. Technical specifications subject to change without notice.

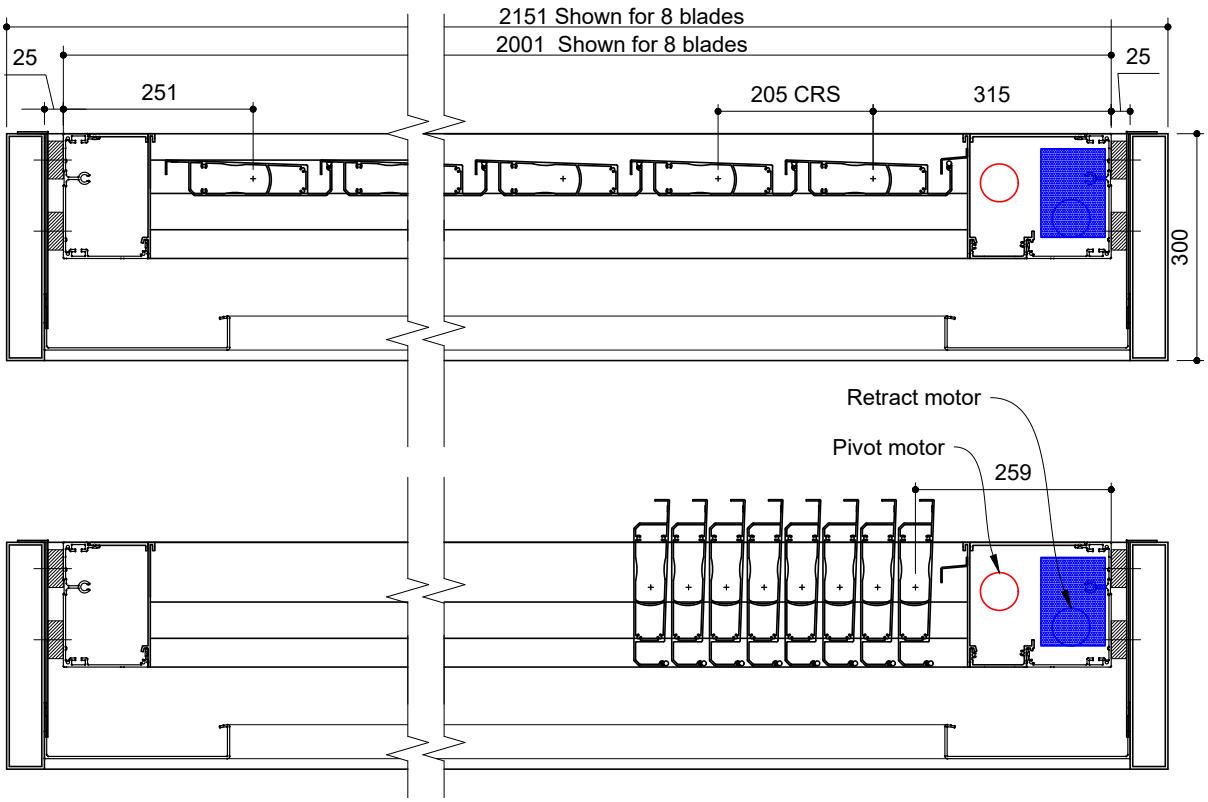


| Retract module sizes with Somfy Motors | | | |
|---|---|---|---|
| Retract Frame 4 sides, Blades retracting to one side | | | |
| | | Fitting into frame by others | Including our 300x50 frame |
| No of Blades | Retract Drive & Passive Frames | Clearance +25 +25 | Box Frame +50 +50 |
| 8 | 2001 | 2051 | 2151 |
| 9 | 2206 | 2256 | 2356 |
| 10 | 2411 | 2461 | 2561 |
| 11 | 2616 | 2666 | 2766 |
| 12 | 2821 | 2871 | 2971 |
| 13 | 3026 | 3076 | 3176 |
| 14 | 3231 | 3281 | 3381 |
| 15 | 3436 | 3486 | 3586 |
| 16 | 3641 | 3691 | 3791 |
| 17 | 3846 | 3896 | 3996 |
| 18 | 4051 | 4101 | 4201 |
| 19 | 4256 | 4306 | 4406 |
| 20 | 4461 | 4511 | 4611 |
| 21 | 4666 | 4716 | 4816 |
| 22 | 4871 | 4921 | 5021 |
| 23 | 5076 | 5126 | 5226 |
| 24 | 5281 | 5331 | 5431 |
| 25 | 5486 | 5536 | 5636 |
| 26 | 5691 | 5741 | 5841 |
| 27 | 5896 | 5946 | 6046 |
| 28 | 6101 | 6151 | 6251 |
| 29 | 6306 | 6356 | 6456 |
| 30 | 6511 | 6561 | 6661 |
| 31 | 6716 | 6766 | 6866 |
| 32 | 6921 | 6971 | 7071 |

**TYPICAL DETAIL : 4 SIDED RETRACT ROOF**
**WITHIN 300X50 ALUMINIUM STRUCTURAL FRAME, BLADES STACK EVENLY TO EACH END**

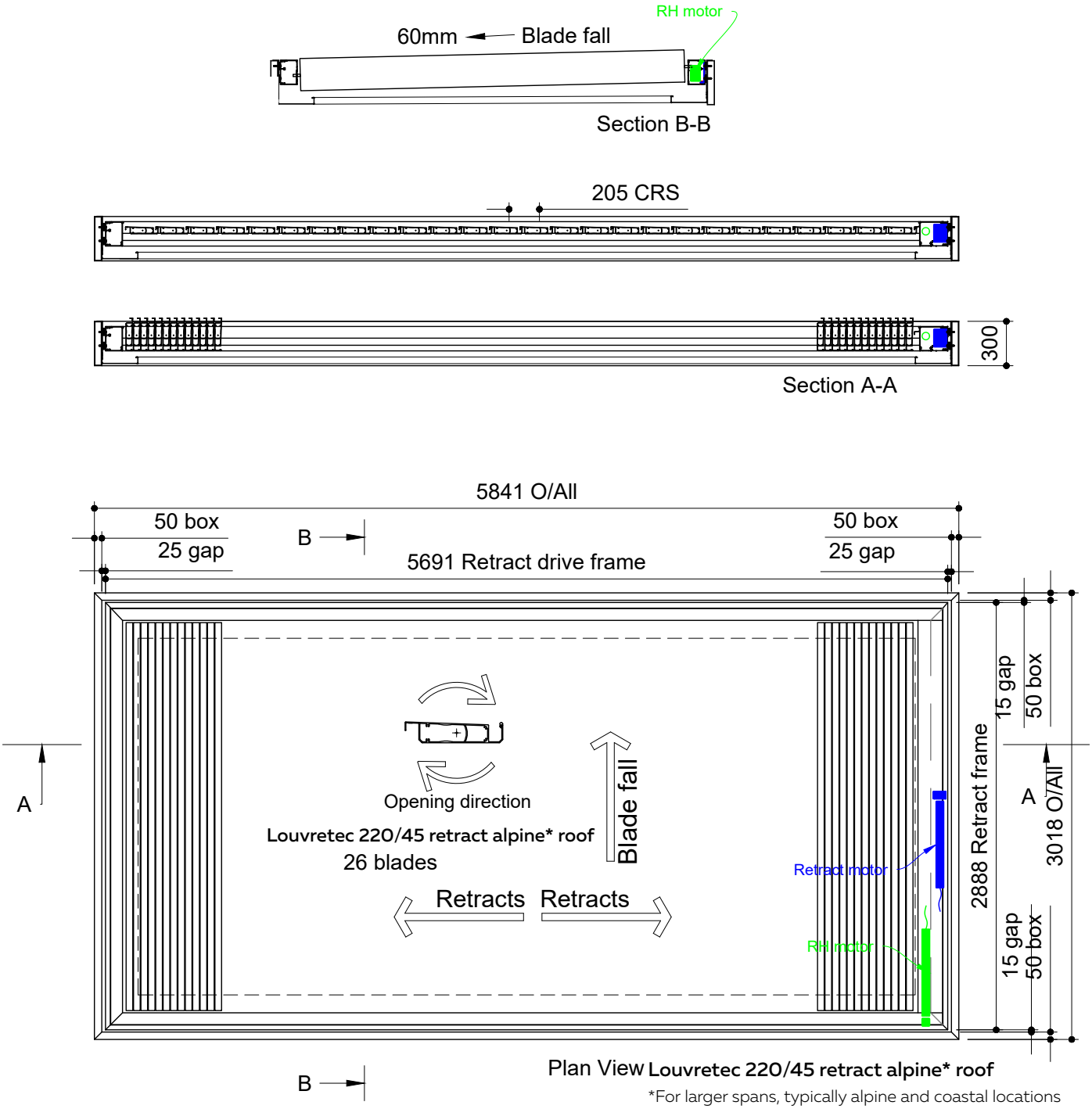


EXAMPLE: 26 BLADES, 4 SIDED RETRACT ROOF SITTING WITHIN 300X50 ALUMINIUM STRUCTURAL FRAME. BLADES STACK EVENLY TO EACH END.

FOR RETRACT BLADE CALCULATION SHEET
REFER TO PAGE 3.31 IN THIS SECTION


©Louvretec 2025 - All Rights Reserved. Technical specifications subject to change without notice.

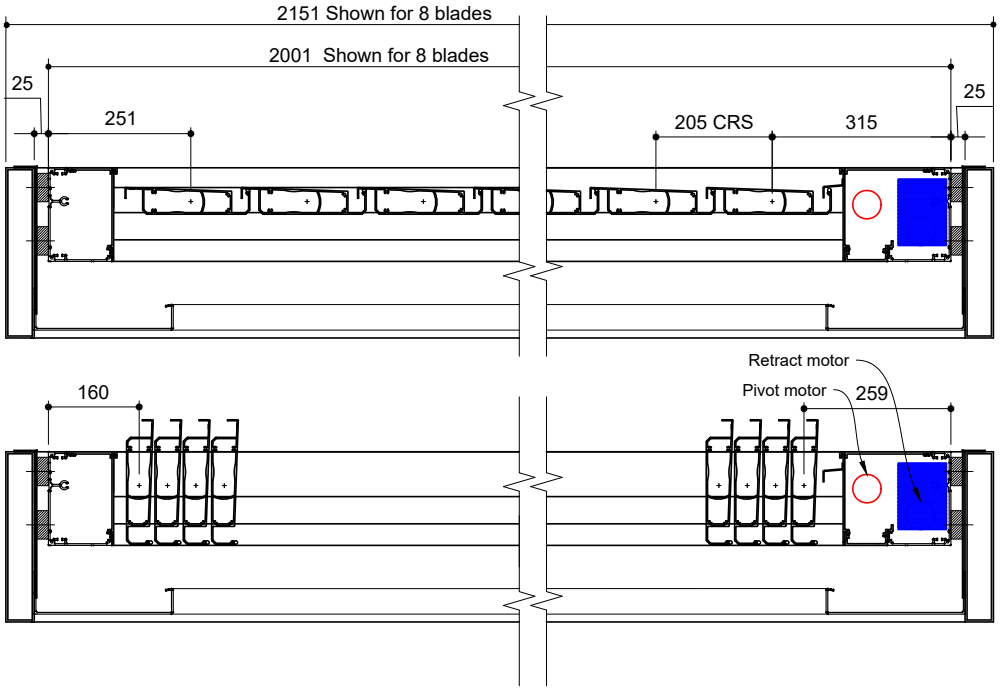


| Retract module sizes with Somfy Motors | | | |
|---|---|---|---|
| Retract Frame 4 sides, Blades retracting to both sides, Even number | | | |
| | | Fitting into frame by others | Including our 300x50 frame |
| No of Blades | Retract Drive & Passive Frames | Clearance +25 +25 | Box Frame +50 +50 |
| 8 | 2001 | 2051 | 2151 |
| 10 | 2411 | 2461 | 2561 |
| 12 | 2821 | 2871 | 2971 |
| 14 | 3231 | 3281 | 3381 |
| 16 | 3641 | 3691 | 3791 |
| 18 | 4051 | 4101 | 4201 |
| 20 | 4461 | 4511 | 4611 |
| 22 | 4871 | 4921 | 5021 |
| 24 | 5281 | 5331 | 5431 |
| 26 | 5691 | 5741 | 5841 |
| 28 | 6101 | 6151 | 6251 |
| 30 | 6511 | 6561 | 6661 |
| 32 | 6921 | 6971 | 7071 |


©Louvretec 2025 – All Rights Reserved. Technical specifications subject to change without notice.

## TYPICAL DETAIL : 4 SIDED DOUBLE RETRACT WITH MID BEAM WITHIN 300X50 ALUMINIUM STRUCTURAL FRAME BLADES STACK EVENLY OR UNEVENLY TO EACH END

DOUBLE RETRACT ROOF SHOWN WITH MID BEAM

FOR MID BEAM DETAIL REFER TO PAGE 3.32-35 IN THIS RETRACT ROOF SECTION

Blades close onto flashings, no mid gutter required.

Example shows 300x50 aluminium frame – discuss job-specific frame details with Louvretec. Weather induced frame contraction and expansion can occur over large spanning measurements.

Max length: 64 blades, 13734mm

BLADES ARE END STACKED AND CAN BE EITHER EVEN OR UNEVEN NUMBER IN EITHER ROOF.

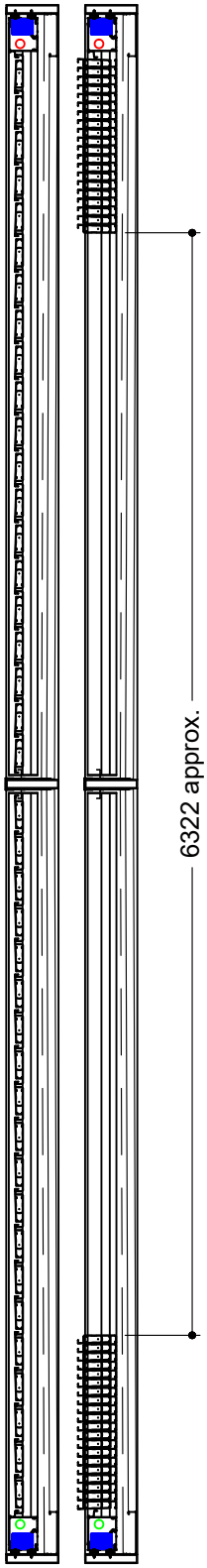


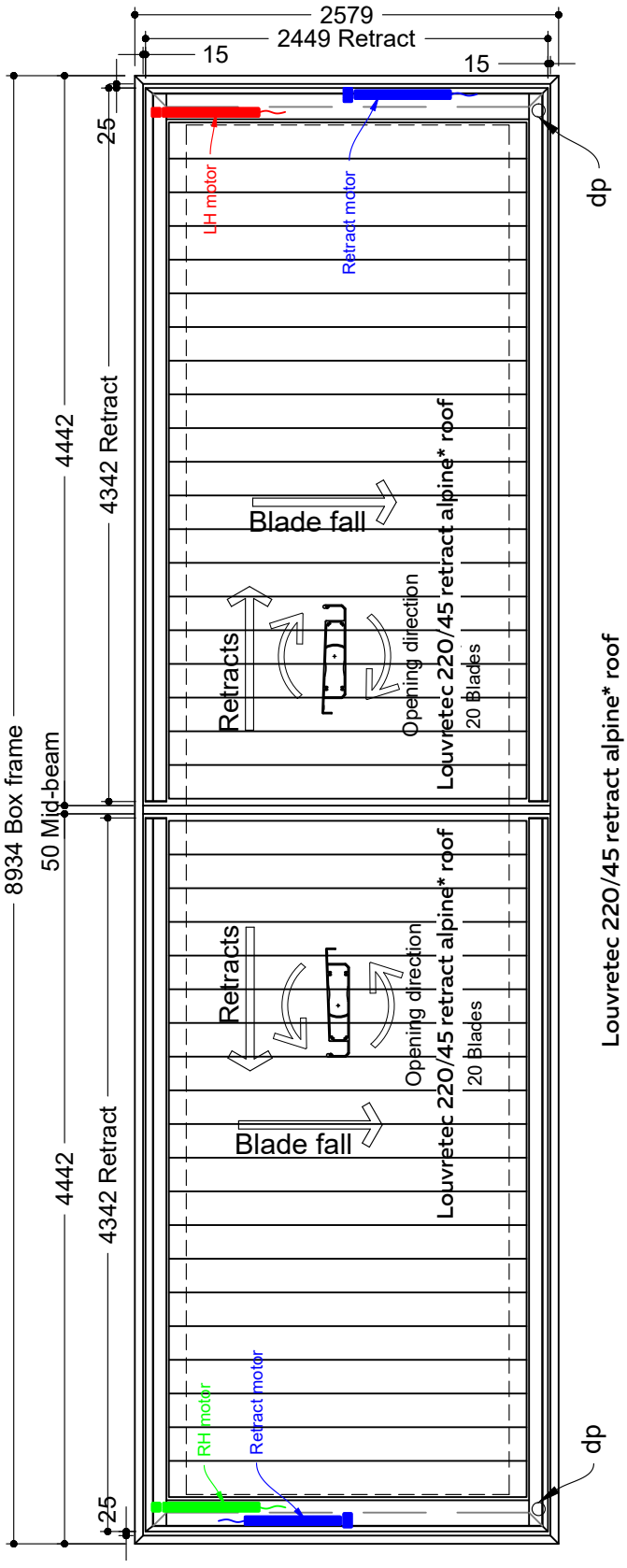


EXAMPLE:
40 BLADE, 4 SIDED DOUBLE RETRACT WITH MID BEAM, SITTING WITHIN 300X50ALUMINIUM BOX SECTION FRAME.

FOR RETRACT BLADE CALCULATIONS SHEETS REFER TO PAGE 3.35 IN THIS RETRACT ROOF SECTION

CONTACT LOUVRETEC FOR NON MID-BEAM OPTION





©Louvretec 2025 - All Rights Reserved. Technical specifications subject to change without notice.

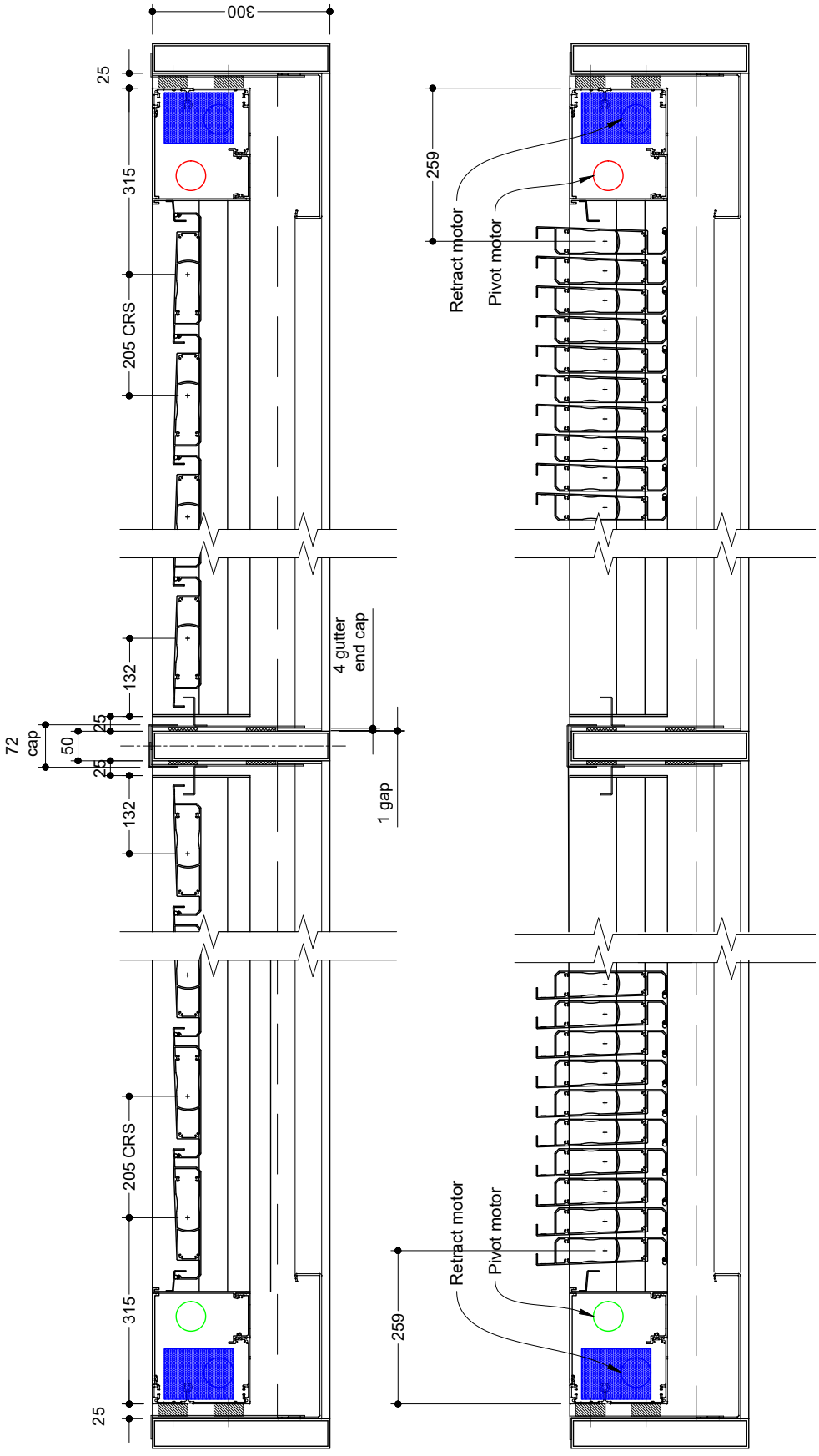


CONTACT LOUVRETEC FOR NON MID-BEAM OPTION


©Louvretec 2025 – All Rights Reserved. Technical specifications subject to change without notice.

## BLADE AND FRAME CLEARANCES: 4 SIDED DOUBLE RETRACT ROOF WITH MID BEAM AND 300X50 ALUMINIUM STRUCTURAL FRAME

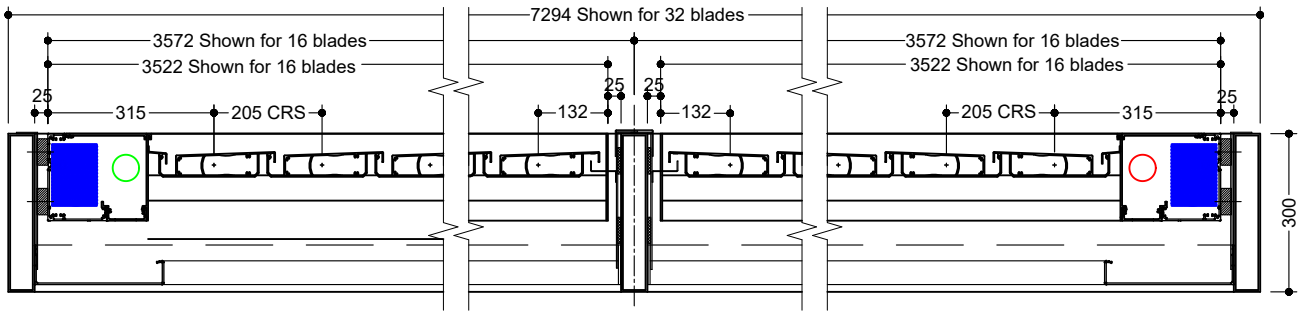


Section A-A, Blades Extended

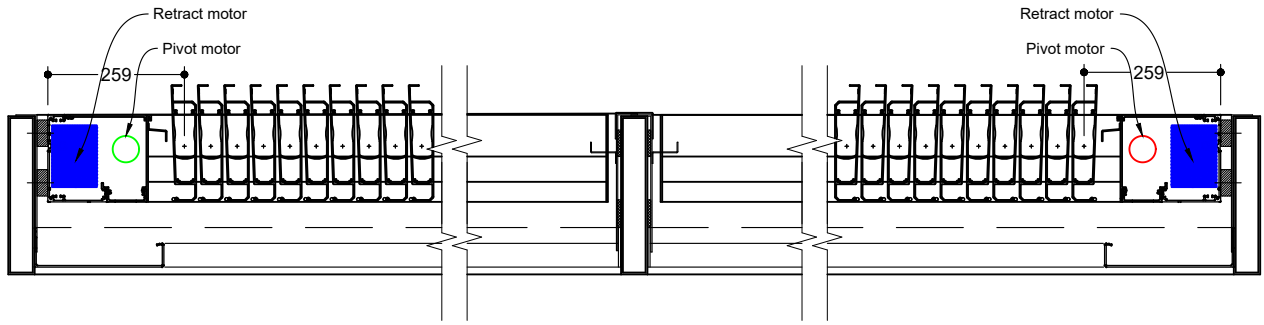


Section A-A, Blades Retracted

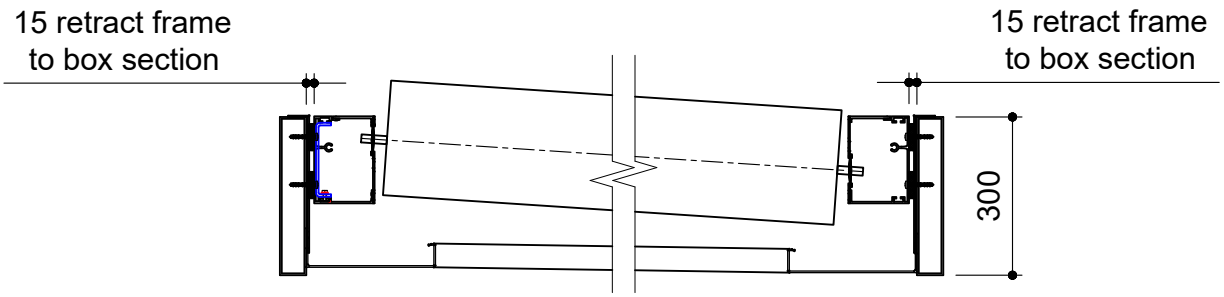


Section B-B

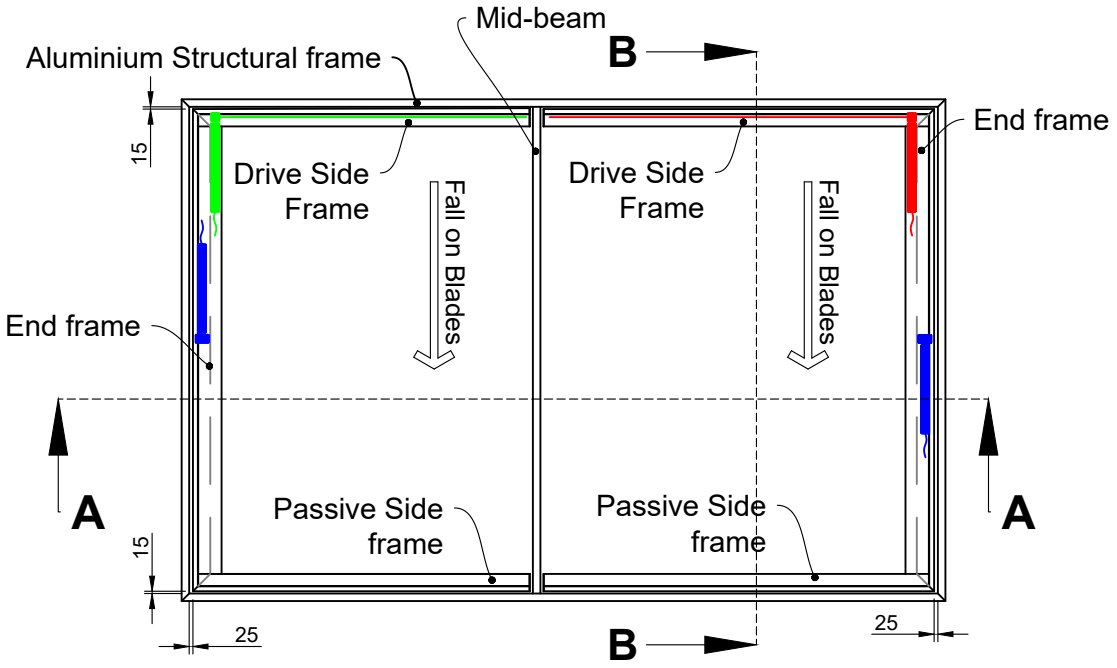


CONTACT LOUVRETEC FOR NON MID-BEAM OPTION



FILE: RETRACT 3.34 DATE MODIFIED: 01/10/2024 SCALE:

www.louvretec.co.nz www.louvretec.com.au

©Louvretec 2025 - All Rights Reserved. Technical specifications subject to change without notice.

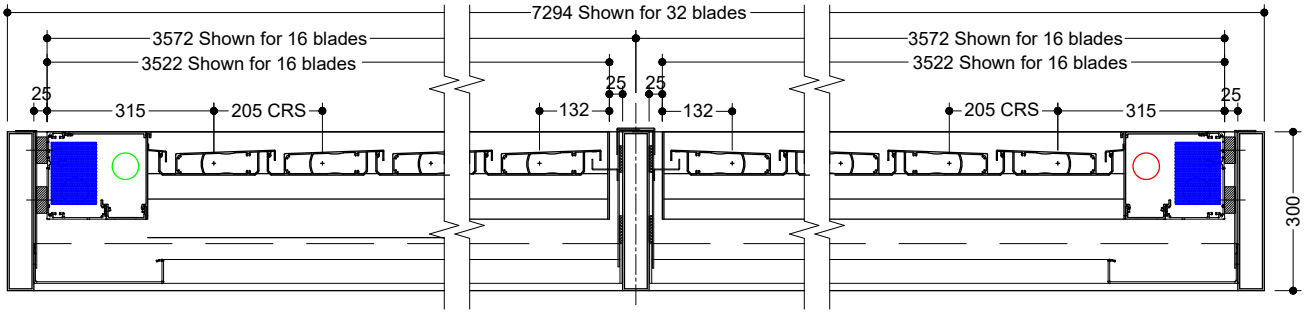


**Retract module sizes with Somfy Motors**

2 Retract Roofs with internal beam in-between — CONTACT LOUVRETEC FOR NON MID-BEAM OPTION

| | *Part A* | | | *Part B* | | | *Total* | |
|---|---|---|---|---|---|---|---|---|
| No of Blades | Retract Drive & Passive Frames | distance to centre line of internal beam | No of Blades | Retract Drive & Passive Frames | distance to centre line of internal beam | total number of blades | Clearance (+25+25) frame by others | Box frame +50+50 Including our 300x50 frame |
| 16 | 3522 | 3572 | 16 | 3522 | 3572 | 32 | 7194 | 7294 |
| 17 | 3727 | 3777 | 16 | 3522 | 3572 | 33 | 7399 | 7499 |
| 17 | 3727 | 3777 | 17 | 3727 | 3777 | 34 | 7604 | 7704 |
| 18 | 3932 | 3982 | 17 | 3727 | 3777 | 35 | 7809 | 7909 |
| 18 | 3932 | 3982 | 18 | 3932 | 3982 | 36 | 8014 | 8114 |
| 19 | 4137 | 4187 | 18 | 3932 | 3982 | 37 | 8219 | 8319 |
| 19 | 4137 | 4187 | 19 | 4137 | 4187 | 38 | 8424 | 8524 |
| 20 | 4342 | 4392 | 19 | 4137 | 4187 | 39 | 8629 | 8729 |
| 20 | 4342 | 4392 | 20 | 4342 | 4392 | 40 | 8834 | 8934 |
| 21 | 4547 | 4597 | 20 | 4342 | 4392 | 41 | 9039 | 9139 |
| 21 | 4547 | 4597 | 21 | 4547 | 4597 | 42 | 9244 | 9344 |
| 22 | 4752 | 4802 | 21 | 4547 | 4597 | 43 | 9449 | 9549 |
| 22 | 4752 | 4802 | 22 | 4752 | 4802 | 44 | 9654 | 9754 |
| 23 | 4957 | 5007 | 22 | 4752 | 4802 | 45 | 9859 | 9959 |
| 23 | 4957 | 5007 | 23 | 4957 | 5007 | 46 | 10064 | 10164 |
| 24 | 5162 | 5212 | 23 | 4957 | 5007 | 47 | 10269 | 10369 |
| 24 | 5162 | 5212 | 24 | 5162 | 5212 | 48 | 10474 | 10574 |
| 25 | 5367 | 5417 | 24 | 5162 | 5212 | 49 | 10679 | 10779 |
| 25 | 5367 | 5417 | 25 | 5367 | 5417 | 50 | 10884 | 10984 |
| 26 | 5572 | 5622 | 25 | 5367 | 5417 | 51 | 11089 | 11189 |
| 26 | 5572 | 5622 | 26 | 5572 | 5622 | 52 | 11294 | 11394 |
| 27 | 5777 | 5827 | 26 | 5572 | 5622 | 53 | 11499 | 11599 |
| 27 | 5777 | 5827 | 27 | 5777 | 5827 | 54 | 11704 | 11804 |
| 28 | 5982 | 6032 | 27 | 5777 | 5827 | 55 | 11909 | 12009 |
| 28 | 5982 | 6032 | 28 | 5982 | 6032 | 56 | 12114 | 12214 |
| 29 | 6187 | 6237 | 28 | 5982 | 6032 | 57 | 12319 | 12419 |
| 29 | 6187 | 6237 | 29 | 6187 | 6237 | 58 | 12524 | 12624 |
| 30 | 6392 | 6442 | 29 | 6187 | 6237 | 59 | 12729 | 12829 |
| 30 | 6392 | 6442 | 30 | 6392 | 6442 | 60 | 12934 | 13034 |
| 31 | 6597 | 6647 | 30 | 6392 | 6442 | 61 | 13139 | 13239 |
| 31 | 6597 | 6647 | 31 | 6597 | 6647 | 62 | 13344 | 13444 |
| 32 | 6802 | 6852 | 31 | 6597 | 6647 | 63 | 13549 | 13649 |
| 32 | 6802 | 6852 | 32 | 6802 | 6852 | 64 | 13754 | 13854 |


©Louvretec 2025 – All Rights Reserved. Technical specifications subject to change without notice.

## Louvretec 220 retract slimline roof - Stack dimensions when blades fully retracted

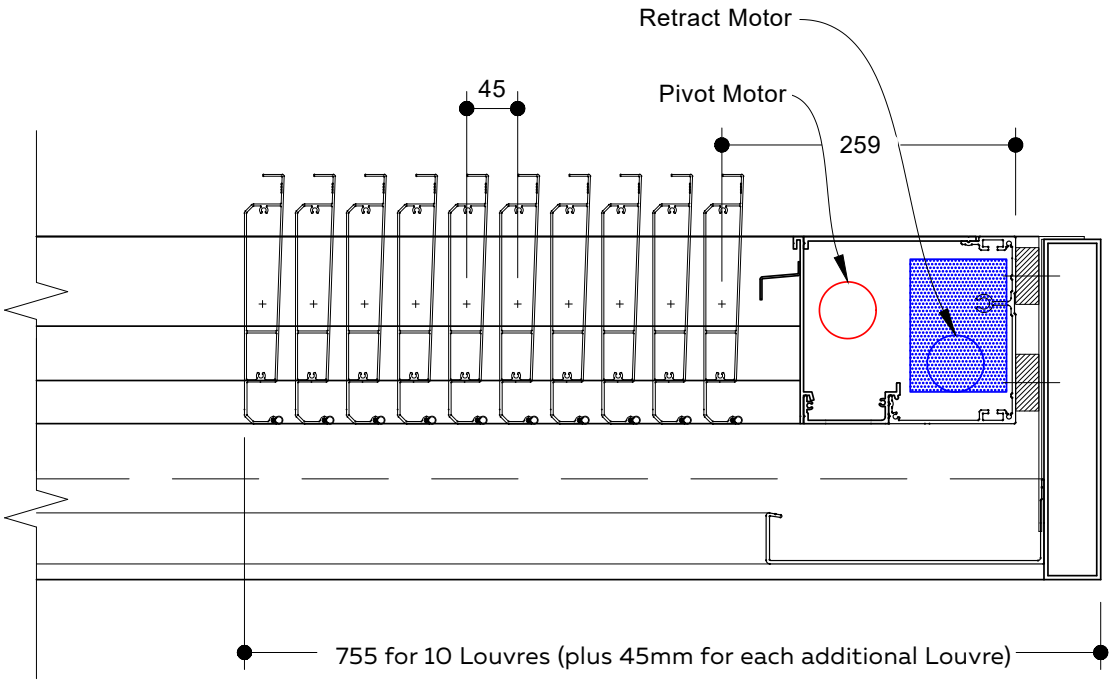


## Louvretec 220/45 retract alpine* roof - Stack dimensions when blades fully retracted

*For larger spans, typically alpine and coastal locations

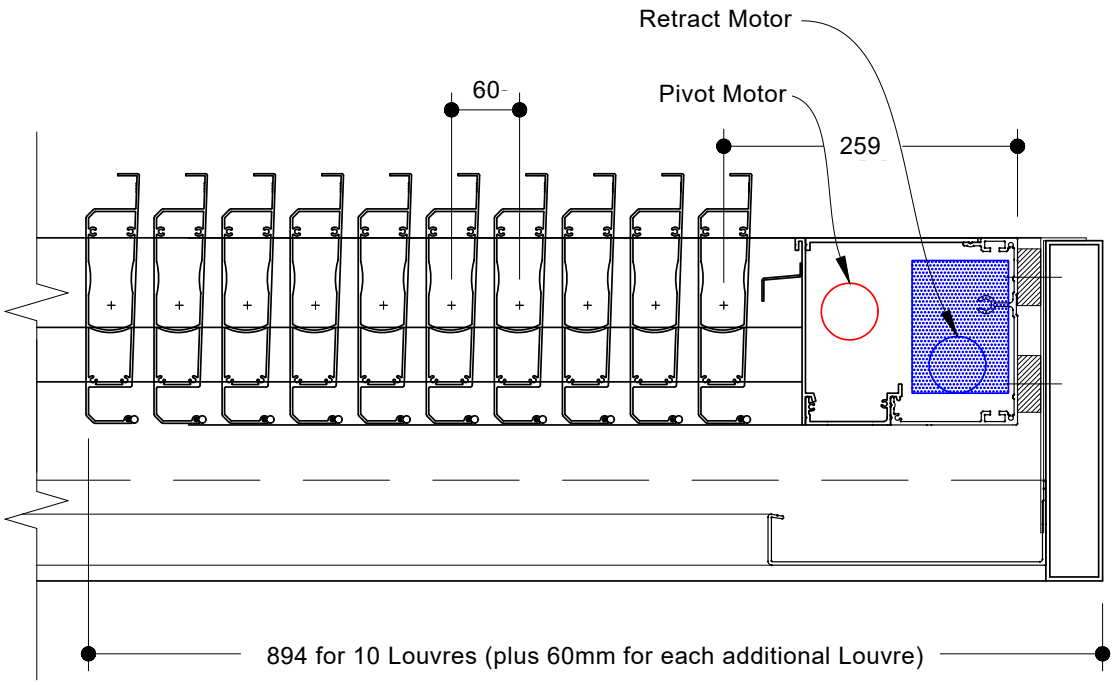




FILE: RETRACT 3.36 DATE MODIFIED: 01/10/2026 SCALE:

www.louvretec.co.nz www.louvretec.com.au

©Louvretec 2025 - All Rights Reserved. Technical specifications subject to change without notice.




NOON DUO CONTROLLER BY TELECO/SOMFY – A CUSTOM PROGRAMMED RETRACT ROOF CONTROLLER.

# REMOTE CONTROLLER

## Custom programmed

The Louvretec customised Noon Duo Retract Remote Controller has 11 channels which enables 11 different Louvretec products to be programmed on to the remote control.

This one remote is a sophisticated solution for installations that feature both Teleco and Somfy receivers, such as Retractable Roof & Motorised Blinds.

A demonstration of the remote control is given to each customer along with an easy to follow customised remote control instruction card.

Retractable Roofs can be operated from a Smartphone - please ask your Louvretec Dealer for the latest options.

# ELECTRICAL DETAILS

## Electrical information

Refer Electrical Wiring Details Section 14 to view Electrical Wiring Diagrams




REFER TO SECTION 14: ELECTRICAL WIRING DIAGRAMS

©Louvretec 2025 – All Rights Reserved. Technical specifications subject to change without notice.

# RETRACT AFTER SALES CARE & WARRANTY

## Operating instructions, Warranty and care

On completion of a Louvretec Retract Roof the owner is provided with a Retract Warranty that also contains information such as operating instructions & care and cleaning advice.

A Retract Roof is a high value item that benefit's from regular servicing. Louvretec Retracts are designed to an exacting standard, incorporating the very latest in Retract technology.
Retracting Louvre systems means more moving parts - these will require regular cleaning, servicing and protective maintenance to keep your Retract system in good working order.



## Regular servicing every 12 months

We recommend a regular maintenance service on a twelve month basis.
Some Louvretec Dealerships also offer a full valet cleaning service. Check with your local Dealer to see if this service is available.
Please refer to the Retract Warranty regarding general care, cleaning, key points regarding safe operation of the Retract System, along with the full Product Warranty.


LOUVRETEC PRODUCT WARRANTY

RETRACT ROOFS

LouvreCare

Engineered for Life

LouvreTec


LOUVRETEC PRODUCT WARRANTY

EFFECTIVE FROM NOVEMBER 2026

RETRACT ROOFS

louvretec retract

warranty details & workmanship

motorisation

product materials

powdercoat finishes

anodised finishes

fully engineered structural

cleaning

product description

louvrecare



DATE MODIFIED: 01/10/2026

©Louvretec 2025 – All Rights Reserved. Technical specifications subject to change without notice.



RETRACTED. AUCKLAND, NZ



RETRACT ROOF CLOSED. AUCKLAND, NZ

# SAFE OPERATION

Any object that obstructs the path of the louvres during the rotating and/or retract/extend operation can cause damage. Objects can include but not limited to branches, bottles, broom handles, balls, tools etc.

Ensure gutters and surrounding areas are free of any objects before operating.

# EASE OF OPERATION

IN HIGH WINDS IT IS RECOMMENDED NOT TO USE THE RETRACT MODE. THE FORCE OF THE WIND ON THE LOUVRE BLADE WHEN RETRACTING CAN AFFECT THE MOVEMENT OF THE LOUVRE BLADES.

IN HIGH WINDS WE RECOMMEND HAVING THE LOUVRES PARKED IN THE FULLY CLOSED POSITION. HIGH WINDS CAN CAUSE THE LOUVRE BLADES TO RATTLE AGAINST EACH OTHER WHEN RETRACTED BACK.

- The Retract Roof remote has preset keys to rotate/tilt the louvres to 45°, 90° & 135°. By pressing the key a second time will stop the louvres at any point in between the above tilt angles.
- When in retracting mode the roof the louvres will always go to 90° before retracting back.
- Once the louvres have moved from the fully retracted position, the louvres will automatically close. Simply rotate them open and close (just like a standard Opening Roof) for operable shelter when they are fully returned.
- A rain sensor option is available. The rain sensor is activated by detecting drops of water. When activated the remote unit will move the roof to the extended position and close the louvres.
- The remote unit executes no further commands until 20 seconds after the sensor no longer detects any drops.
- Lighting & heating options can also be operated on the Retract's remote control unit.

INSTALLATION NOTE:
Take care, never install a flashing over the motor, end frame, drive and passive frame covers.

©Louvretec 2025 – All Rights Reserved. Technical specifications subject to change without notice.

# LOUVRETEC PRODUCT WARRANTY

## RETRACT ROOFS

**The Louvretec range of products:**

All Louvretec branded products are designed and engineered in Australia & New Zealand by Louvretec to comply with relevant AS/NZS standards - refer to full Louvretec Engineering data Design Manual 2025 Section 13.

Louvretec has the most extensive range of outdoor sun shading/ outdoor living products available in Australasia, backed by a comprehensive network of Louvretec Dealers.

Most Louvretec products sold in Australia are made in Australia*

Most Louvretec products sold in New Zealand are made in New Zealand*

*Some specialised products may only be made in Australia or in NZ and are shipped between each country.

**The Authorised Louvretec Dealer Network:**

Your Louvretec product will have been supplied and installed by your local Authorised Louvretec Dealer. All Louvretec Dealerships are privately owned, and the same Louvretec Dealer who supplied your Louvretec will also service your Louvretec.

Your Louvretec product has been "Engineered for Life" and we are committed to ensuring that happens.

**Louvrecare:**

Preventative maintenance and valet. Regular scheduled servicing by a Louvrecare team has real benefits. Louvrecare can vary between Dealerships - consult your local Louvretec Dealer.

LouvreCare
PREVENTATIVE MAINTENANCE & VALET









*Engineered for Life*

LouvreTec®
OPENING & RETRACT ROOFS / SUN LOUVRES / SHUTTERS



©Louvretec 2025 – All Rights Reserved. Technical specifications subject to change without notice.

# LOUVRETEC PRODUCT WARRANTY

EFFECTIVE FROM NOVEMBER 2026

RETRACT ROOFS

louvretec retract

LouvreTec

HEAD OFFICE:
23c Douglas Alexander Pde, Albany, Auckland, New Zealand
T: +64 9 415 4949 E: info@louvretec.co.nz

**warranty details & workmanship** — 2 YEARS

All Retract Roofs installed by Louvretec, or an Authorised Louvretec Installer, is from date of invoice, fully warranted for the first two years. This warranty covers workmanship, louvres and all componentry, motors, switches and electronics with labour costs included. From year two to end of year five, a warranty 'replacement of parts' only applies for all motors. Labour costs excluded (also excludes any wiring and electrical connections by others).

**motorisation** — 5 YEARS

Louvretec exclusively uses Somfy motors. Somfy offers a 5 year warranty on all motors and electronics. Please contact your Louvretec Dealer or Somfy for a complete list of all terms and conditions.

**product materials**

All aluminium louvres and extrusions used in Louvretec's systems are manufactured in an ISO9002 quality assured environment to AS1866 & AS3902 standards. Marine grade T316 stainless steel is used for drive axles, with stainless steel componentry fixings being standard. Plastic injected moulded componentry is all UV stabilised.

**powdercoat finishes** — 15 YEARS

A wide range of exterior powder coat finishes are available. Different finishes carry different warranties, from 10 – 25 years, but is no less than 10years for Duralloy. Duralloy® +PLUS or equivalent is the standard finish supplied unless stated otherwise and this carries a 15 year film and colour integrity warranty as per the Dulux Powder and Industrial Coatings Warranty. If your project has used the Duratec powdercoat range please refer to the Dulux Powder and Industrial Coatings Warranty wording.

**anodised finishes** — 10 YEARS

The current specifications re anodised aluminium range from 12-20-25 microns depth. The greater the microns the better the protection. With regular cleaning anodised material will retain its original integrity for no less than 10 years.

**fully engineered**

Our louvre systems are designed to conform to New Zealand and Australian standards wind loadings. Full engineering details available on request.

**structural** — 15 YEARS

The aluminium structure of your Opening Roof, Sun Louvre, and or Shutter system including the aluminium frame, beams, posts, and louvre blades, will be free from defects in materials that affect structural integrity for 15 years from the date of installation. What this covers: If the structure fails during the warranty period, Louvretec will, at its option, repair or replace the affected structure. Conditions: This warranty applies where the system has been installed by an Authorised Louvretec Dealer in accordance with our installation specifications and relevant building codes, and has been maintained in line with the Louvretec care and maintenance guide. What's not covered: Damage caused by misuse, accident, modification, or unauthorised repairs; storm, flood, or other events beyond design wind and load ratings; improper installation by non-authorised parties; normal wear and tear; and cosmetic changes such as minor weathering or colour variation.

**cleaning**

1. Periodic cleaning is essential to remove dirt, grime and associated salt deposits from both powder coated and anodised surfaces.
2. Carefully remove any loose deposits with a wet sponge.
3. Use a soft non-abrasive brush and a mild household detergent or car cleaning solution to remove dust, salt and other deposits. Rinse well with clean water.
4. If your Retract roof downpipe connects to tank water supply be sure to dis-connect before cleaning.
5. Most importantly – USE REGULARLY! We recommend at least once every two weeks.

Like a car, in order to keep it under warranty it must be regularly serviced by your authorised Louvretec Dealer.

**product description**

_____

_____

**louvrecare**

Louvrecare is a planned preventative maintenance and valet service designed to keep your Louvretec product clean and in good working order. Contact your Louvretec Dealer for full details.

LouvreCare
PREVENTATIVE MAINTENANCE & VALET

©Louvretec 2025 – All Rights Reserved. Technical specifications subject to change without notice.

# louvretec structural

Frames | Posts | Connections

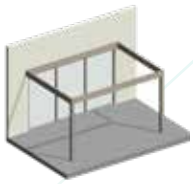


| | |
|---|---|
| Gallery & Overview | 4.02 - 4.05 |
| Structural Frames & Connection Options | 4.06 - 4.08 |
| Post Fixing Details | 4.09 - 4.10 |
| Gutter Outlets | 4.11 - 4.13 |
| Connecting to the Building | 4.15 - 4.34 |


©Louvretec 2025 – All Rights Reserved. Technical specifications subject to change without notice.






©Louvretec 2025 – All Rights Reserved. Technical specifications subject to change without notice.













1 - 4: LOUVRETEC OPENING ROOFS IN LOUVRETEC STRUCTURAL FRAMES

©Louvretec 2025 – All Rights Reserved. Technical specifications subject to change without notice.





©Louvretec 2025 – All Rights Reserved. Technical specifications subject to change without notice.





CHRISTCHURCH, NZ

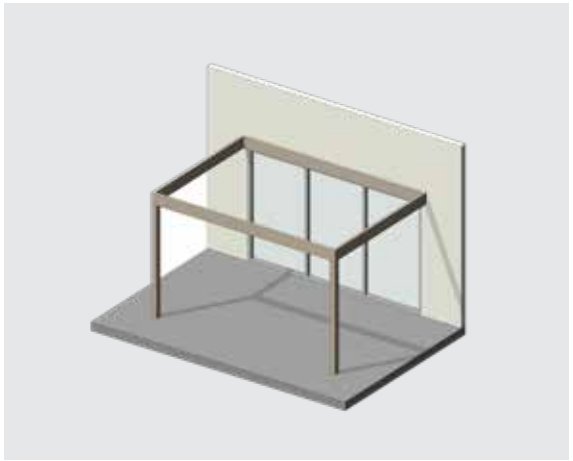

SIMPLY SUPPORTED

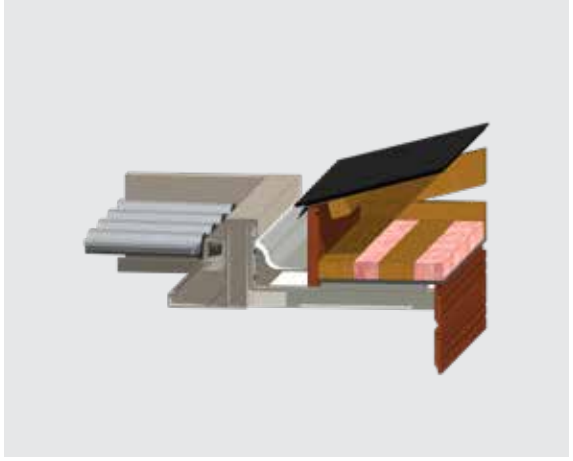

CONNECTION OPTIONS TO BUILDING

# LOUVRETEC STRUCTURAL FRAMES | POSTS | CONNECTIONS

## No substitution is permitted

REFER TO RELEVANT DESIGN INFORMATION
Engineering Section 13; ENGINEERING REPORTS

The following structural drawings and fixing details are for use with Louvretec Aluminium Louvre Systems and supporting structures.

No substitution is permitted – please read in conjunction with relevant design tables as applicable in Engineering Reports Section 13.

## The Louvretec Structural Frame

- As part of the Louvretec Opening Roof / Retract Roof package Louvretec offers a fully engineered structural aluminium frame system.
- This frame system has been designed to meet the structural requirements for a Louvretec Outdoor Room.
- Beams & posts are custom designed to be structurally compliant to the specific wind zone.
- Louvretec structural frames provide for clean, aesthetically pleasing lines and with regular cleaning are virtually maintenance free.
- They are also designed to include wall infills such as outdoor blinds, Slidetec Frameless Glass Sliders, Louvre panels - sliding or fixed.

## Connections to building

- This section also covers a comprehensive range of options for fixing structural beams to existing buildings.
- Options also include braced free-standing posts where fixing to house is not possible.

### SURFACE FINISHING OPTIONS

A wide range of options are available.

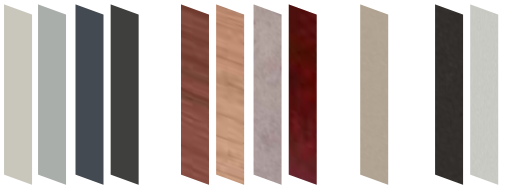

POWDERCOAT | WOODGRAIN & SPECIAL FINISHES | METALLIC | ANODISED

©Louvretec 2025 – All Rights Reserved. Technical specifications subject to change without notice.

## TYPICAL DETAIL **FRAME OPTIONS**

### TYPICAL DETAIL **SIMPLY SUPPORTED STRUCTURAL FRAME**

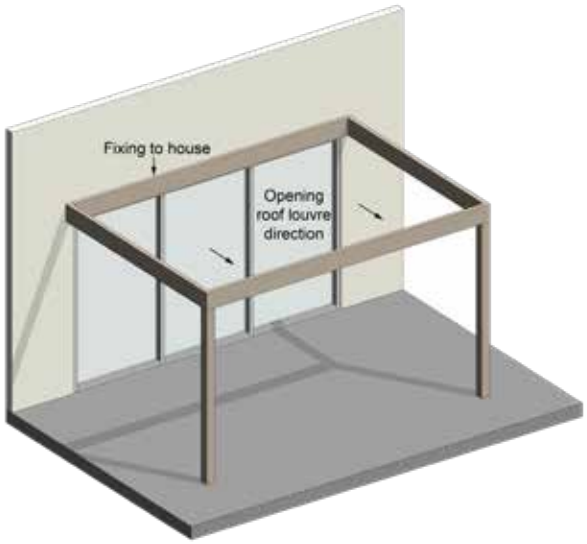


ALUMINIUM BOX SECTION BEAMS AND POSTS. BEAM AND POST SIZES DETERMINED BY SPANS & WIND ZONES.

### TYPICAL DETAIL
### CONTINUOUS SPAN - LENGTH EXTENDED

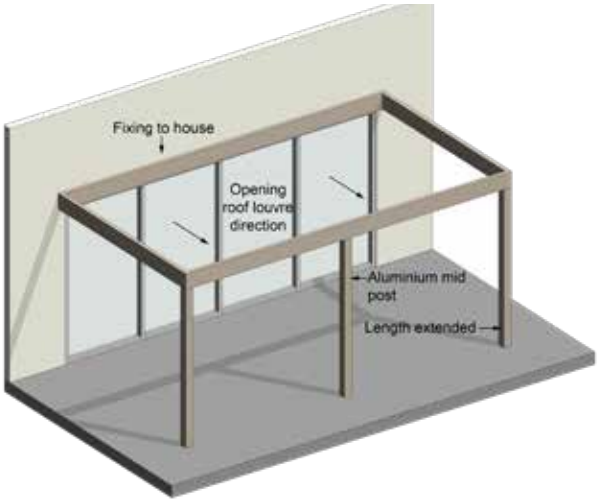


LENGTH OF FRAME IS EXTENDED WITH ADDITIONAL MID-POST.
ALLOWS FOR A LONGER OPENING ROOF.

### TYPICAL DETAIL
### CONTINUOUS SPAN - WIDTH EXTENDED

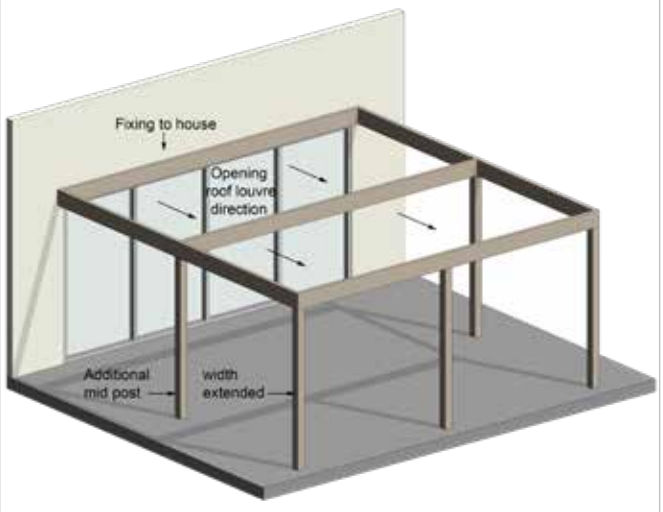


WIDTH OF FRAME IS EXTENDED WITH ADDITIONAL MID-POST.
ALLOWS FOR TWO OPENING ROOFS.


©Louvretec 2025 – All Rights Reserved. Technical specifications subject to change without notice.

## TYPICAL DETAIL **CANTILEVERED STRUCTURAL FRAME**

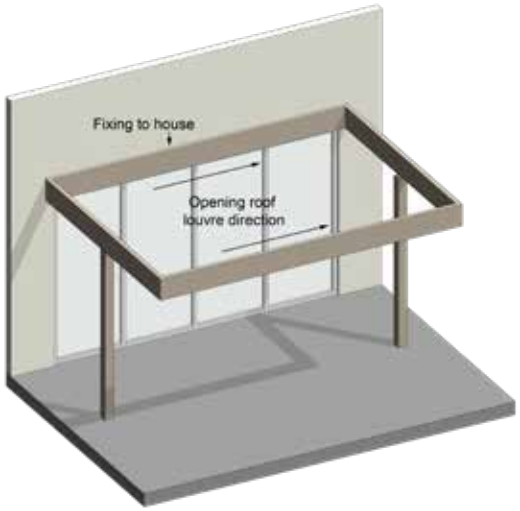


THERE ARE A NUMBER OF CANTILEVER CONFIGURATIONS AVAILABLE.
CONTACT LOUVRETEC FOR ENGINEERING ADVICE.

CANTILEVER CONFIGURATIONS

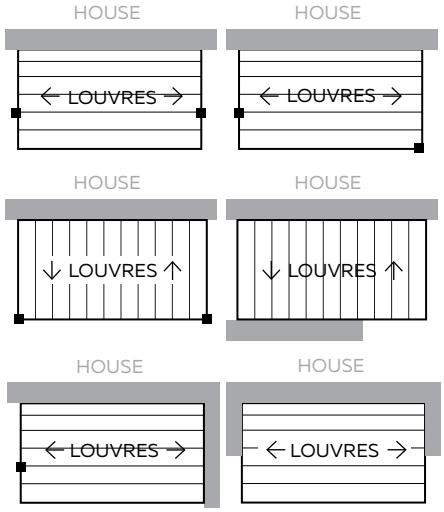


CONTACT LOUVRETEC RE LOUVRES RUNNING PARALLEL TO CANTILEVER.

## TYPICAL DETAIL **STEPPED FRAME**

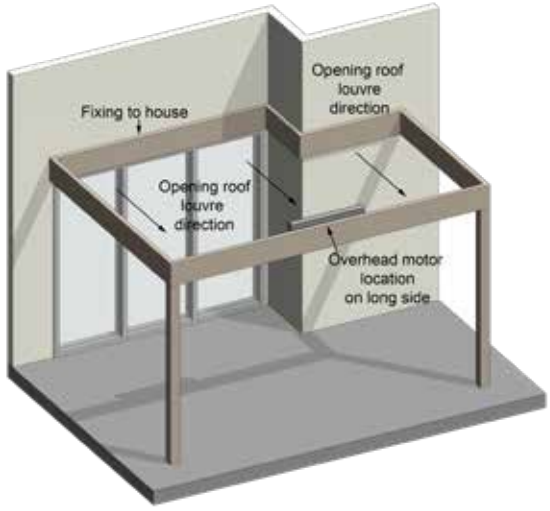


FRAME DESIGNED TO STEP AROUND THE BUILDING OR FIREPLACE.
MOTOR MUST BE LOCATED ON LONG SIDE.

## TYPICAL DETAIL **RAKING FRAME**

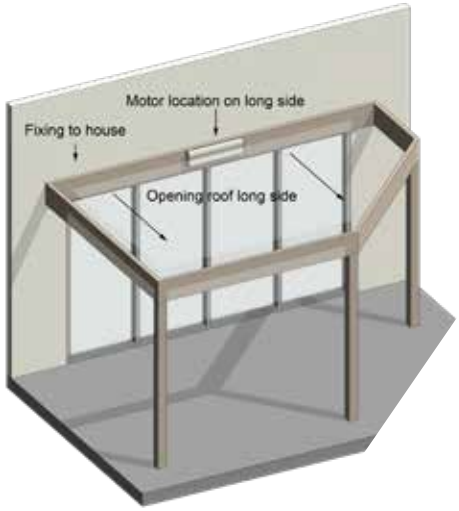


FRAME CAN FOLLOW THE SHAPE OF THE DECK.
MOTOR MUST BE LOCATED ON LONG SIDE.

©Louvretec 2025 – All Rights Reserved. Technical specifications subject to change without notice.

# THE LOUVRETEC STRUCTURAL FRAME



## Post and Beam sizes determined by wind and loading

REFER TO RELEVANT DESIGN INFORMATION
Engineering Section 13/ENGINEERING REPORTS

- The post and beam sizes are calculated and determined by wind speeds with loading factors applied to allow for uplift, down pressure and deflection.
- Please refer Section 13 - Engineering for full engineering and design data.
- For any queries please contact your nearest Louvretec Dealer.



SINGLE BEAM



TWO SINGLE BEAMS, MITRED CORNER



DOUBLE BEAM



DOUBLE BEAM WITH SINGLE BEAM



TWO DOUBLE BEAMS, MITRED CORNER

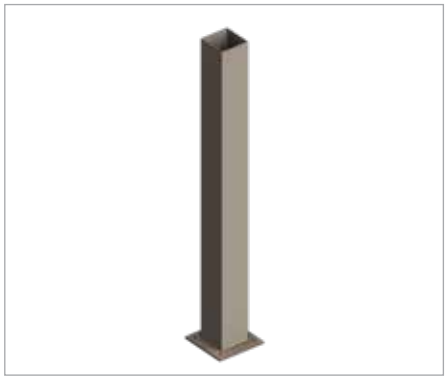

POST WITH BASE PLATE



150X50X3 2/150X50X3 200X50X3 2/200X50X3 225X50X3 2/225X50X3 250X50X3 2/250X50X3 300X50X3 2/300X50X3.5



©Louvretec 2025 – All Rights Reserved. Technical specifications subject to change without notice.

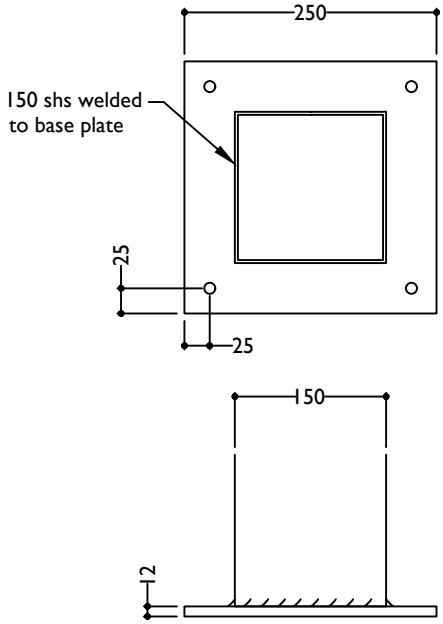


ALUMINIUM POST BASE PLATE - DIMENSIONS

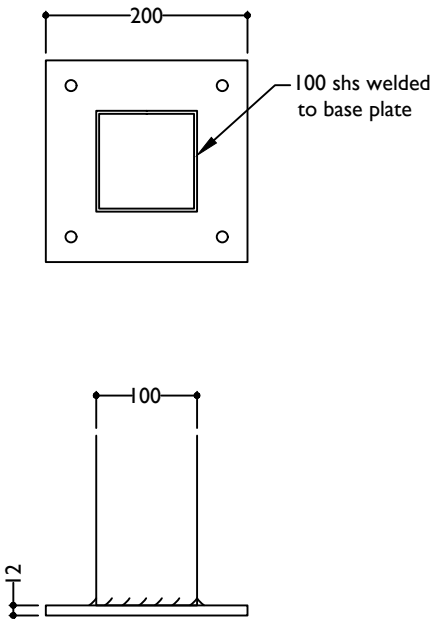


NB: REFER TO ENGINEERING Section 13
FOR CORRECT POST SIZE

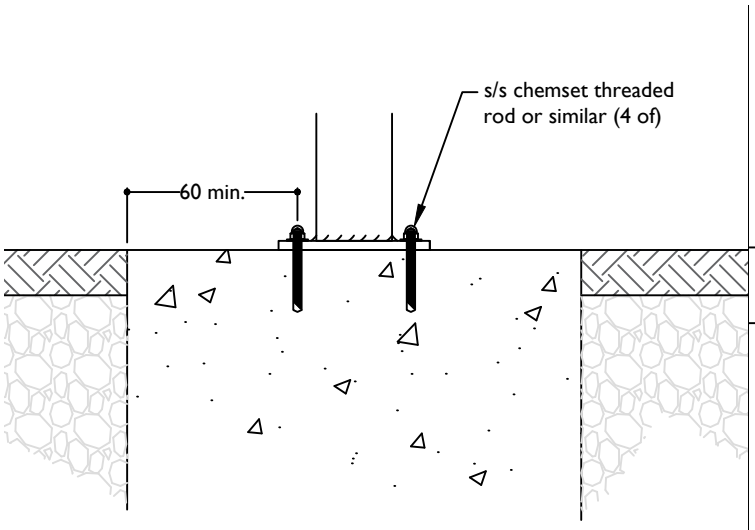


NB: REFER TO ENGINEERING Section 13
FOR CORRECT FOOTING SIZE

SECTION POST TO CONCRETE FOOTING

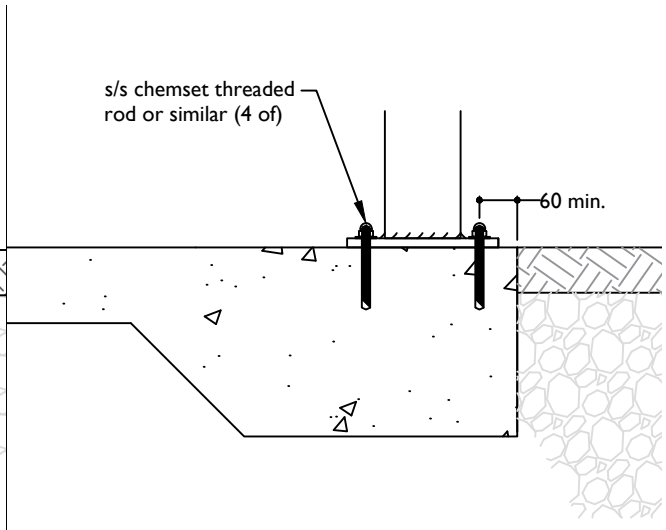


NB: REFER TO ENGINEERING Section 13
FOR CORRECT FOOTING SIZE

SECTION POST TO CONCRETE PAD


©Louvretec 2025 – All Rights Reserved. Technical specifications subject to change without notice.

## TYPICAL DETAIL : OPENING ROOFS STRUCTURAL FRAME POST FIXING DETAILS

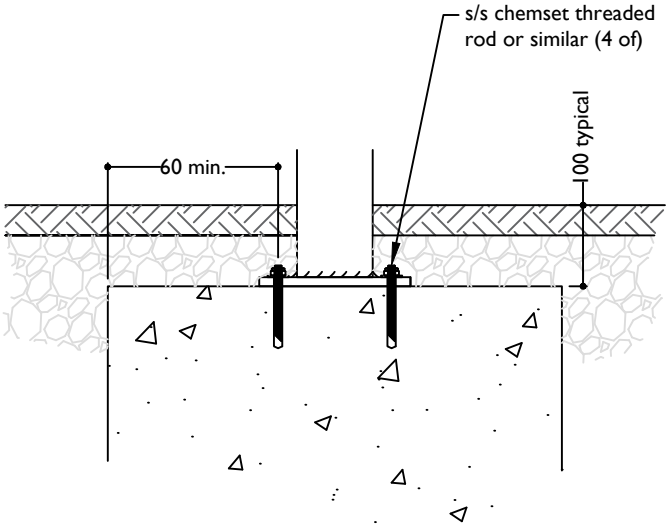


SECTION POST TO CONCRETE FOOTING - RECESSED

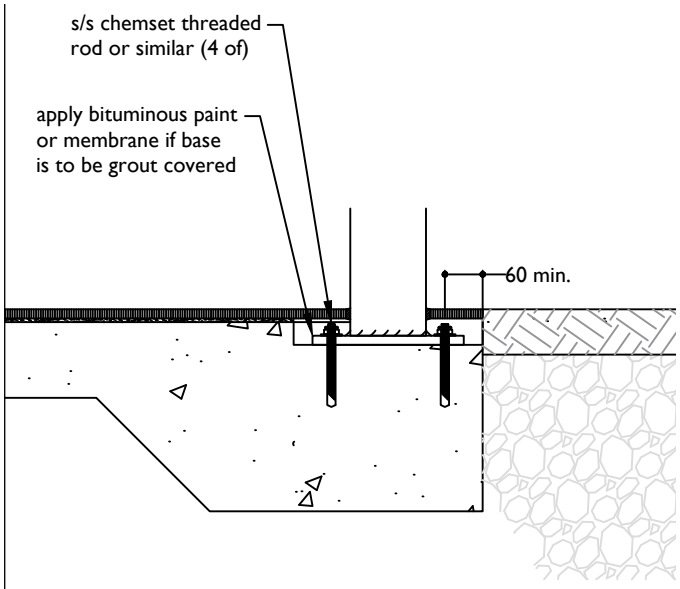


SECTION POST TO CONCRETE PAD - RECESSED

SCALE 1:10

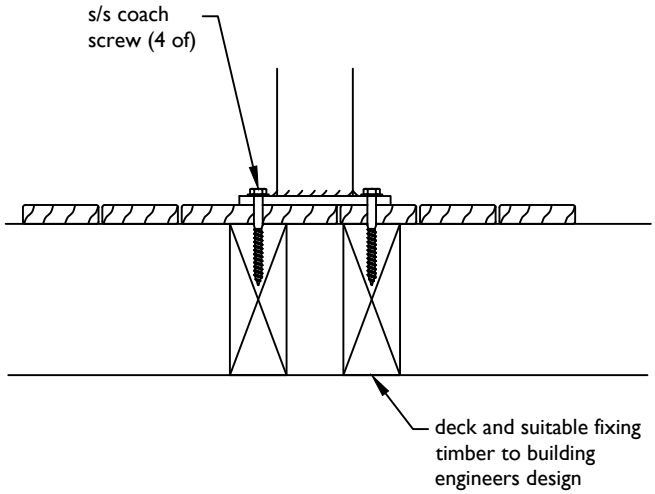


SECTION POST TO TIMBER DECK

SCALE 1:10

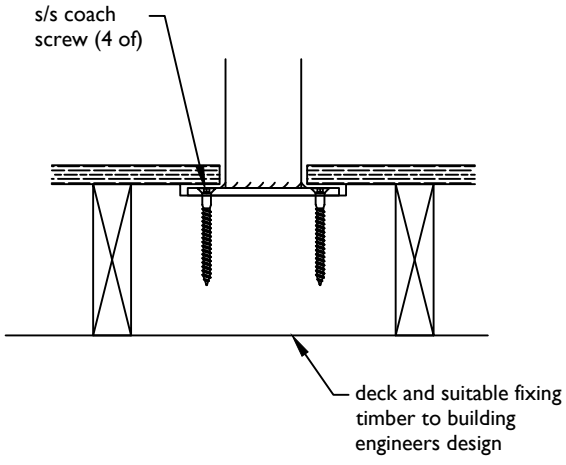


SECTION POST TO TIMBER DECK - RECESSED



FILE: STRUCTURAL 4.10 DATE MODIFIED: 01/10/2024 SCALE:

www.louvretec.co.nz www.louvretec.com.au

©Louvretec 2025 - All Rights Reserved. Technical specifications subject to change without notice.

## TYPICAL DETAIL **GUTTER OUTLETS**

1.
REAR OUTLET THROUGH ALUMINIUM BEAM

2.
CONVENTIONAL OUTLET AND DOWNPIPE DROPPER

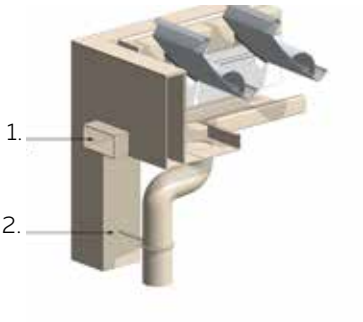


3.
OUTLET USING POST AS DROPPER

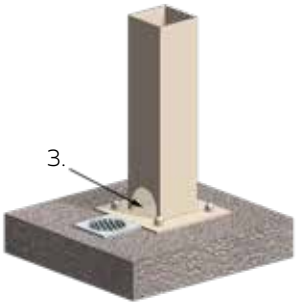


## SECTION **STANDARD 65MM DROPPER IN GUTTER**

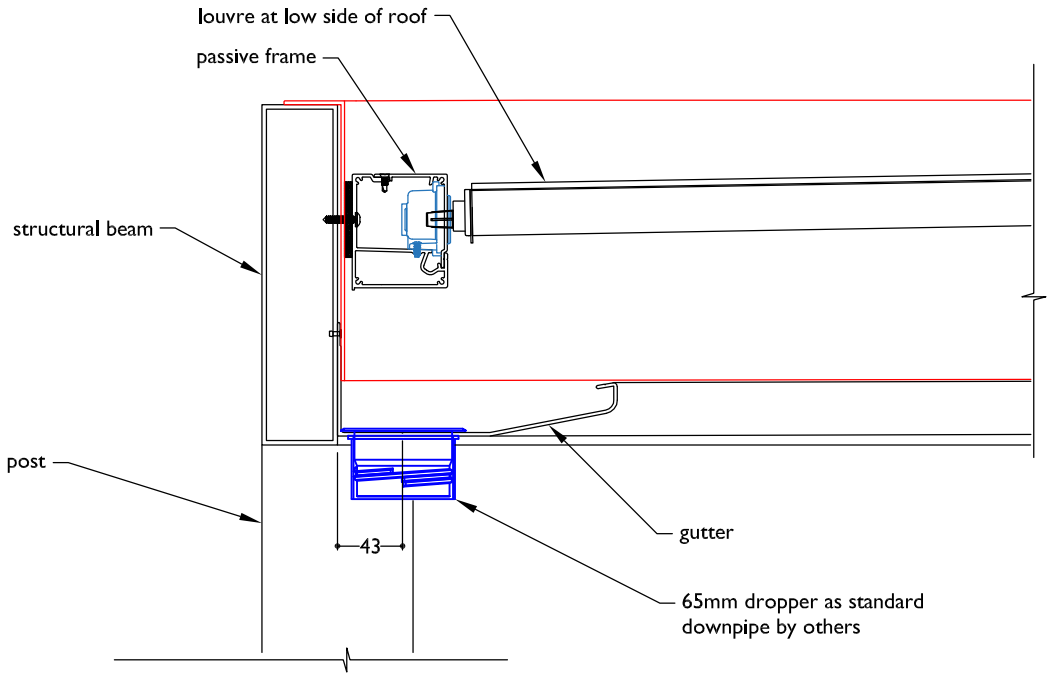


©Louvretec 2025 – All Rights Reserved. Technical specifications subject to change without notice.

## TYPICAL DETAIL : REAR OUTLET GUTTER IN SOFFIT

OUTLET THROUGH FASCIA ROOF SPACE

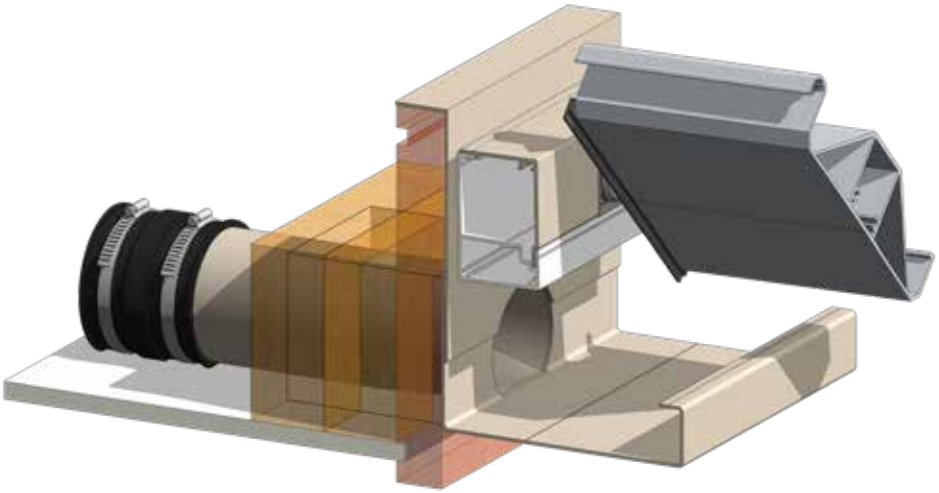

SECTION **OUTLET THROUGH FASCIA ROOF SPACE**

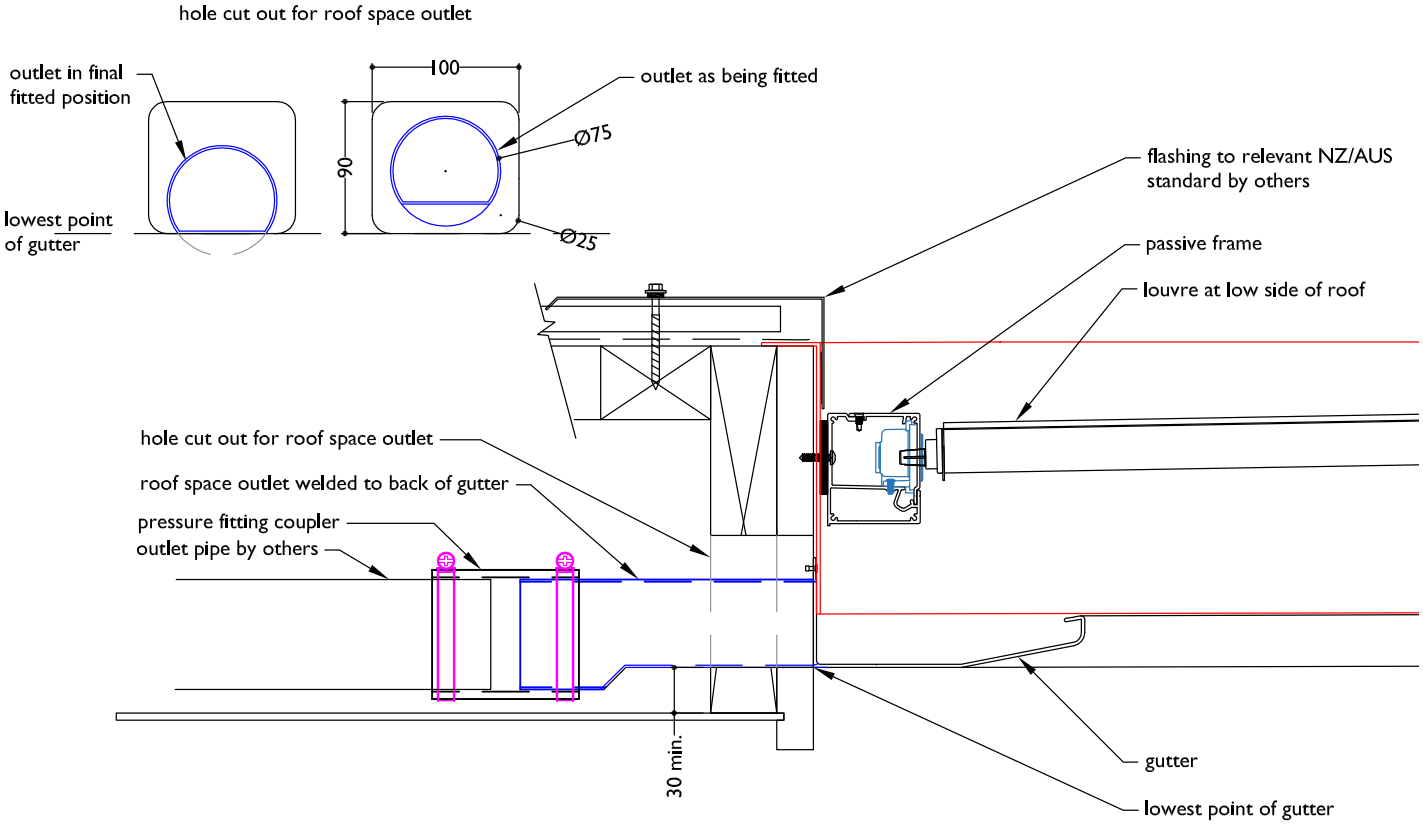




FILE: STRUCTURAL 4.12 DATE MODIFIED: 01/10/2024 SCALE:

www.louvretec.co.nz www.louvretec.com.au

©Louvretec 2025 - All Rights Reserved. Technical specifications subject to change without notice.

## SECTION BACK OUTLET IN GUTTER

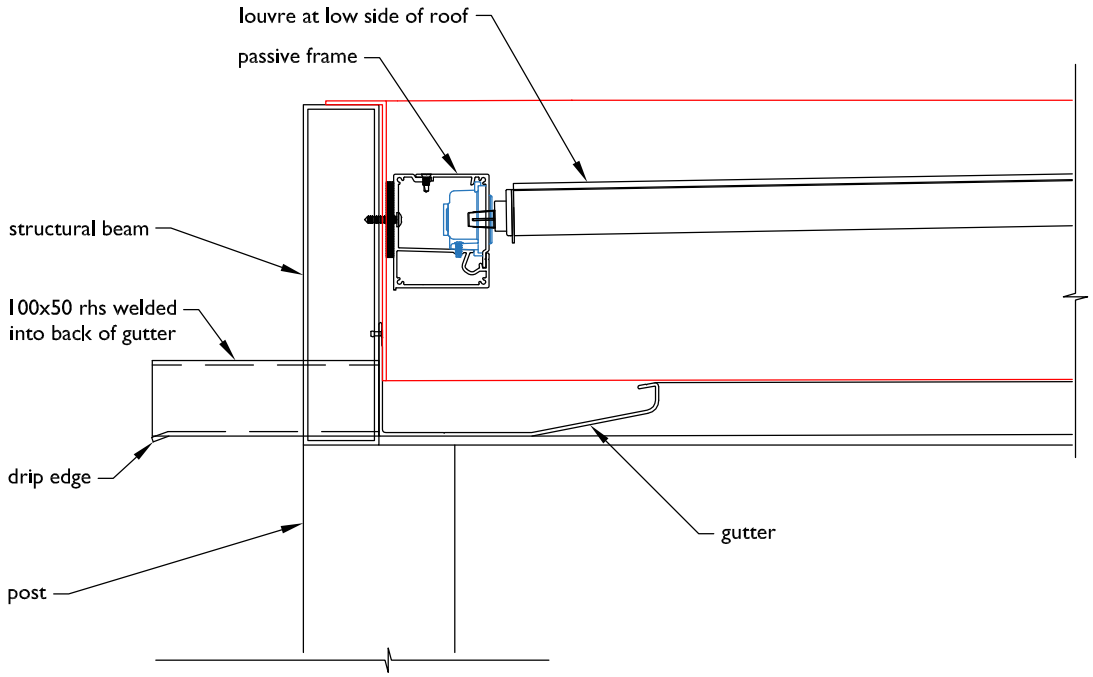


## SECTION THROUGH LOUVRES

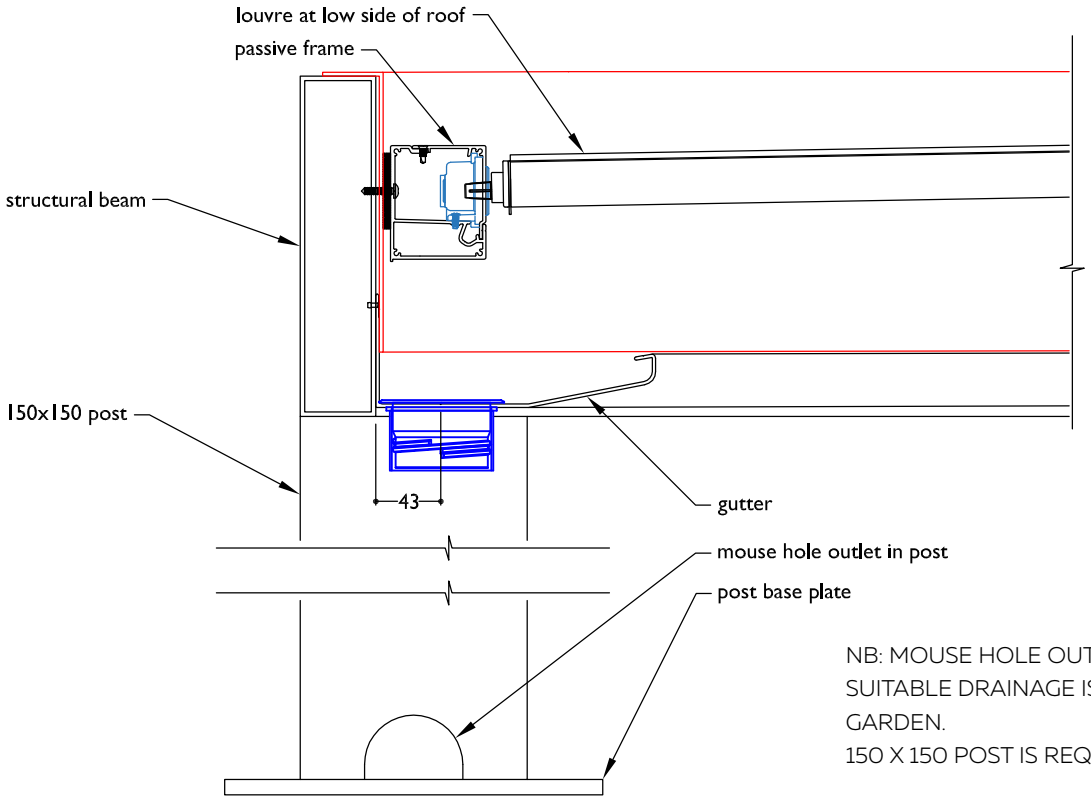


NB: MOUSE HOLE OUTLET USED WHEN SUITABLE DRAINAGE IS AVAILABLE IN DECK/ GARDEN.
150 X 150 POST IS REQUIRED IN MOST CASES.


©Louvretec 2025 – All Rights Reserved. Technical specifications subject to change without notice.

# CONNECTING TO THE BUILDING

## Three typical fixing locations

In most instances, the aluminium structural frame connects either directly to or directly alongside the existing building.

There are three typical fixing locations:

1. Fixing above the existing roof
2. Fixing flush with the existing gutter
3. Fixing directly to - or free standing next to the building



MT EDEN, NZ



1A. OVER ROOF - BRACED OR FREE STANDING POST
Page 4.16

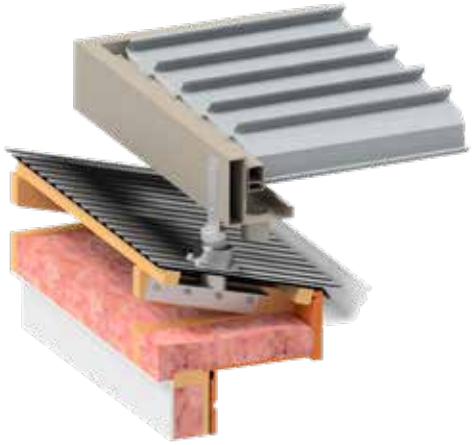

1B. OVER ROOF - RAFTER FIXING BRACKET
Page 4.17



2A. FLUSH TO GUTTER. BRACKET FIXED TO FASCIA
Page 4.18

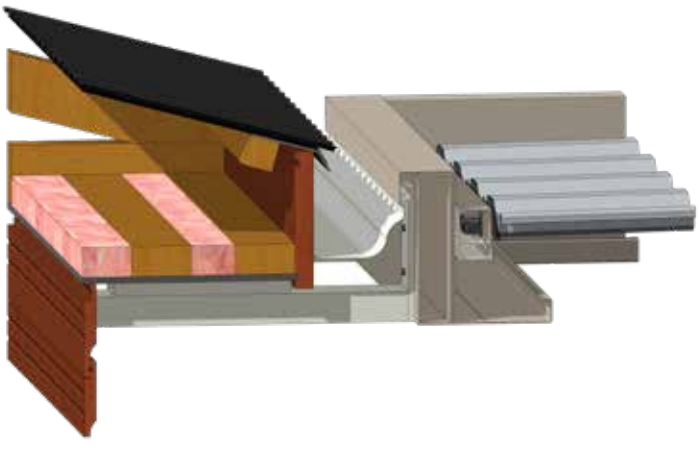

2B. FLUSH TO GUTTER. BRACKET FIXED TO SOFFIT
Page 4.19



©Louvretec 2025 – All Rights Reserved. Technical specifications subject to change without notice.



AUCKLAND, NZ

# CONNECTING TO THE BUILDING

## Fixing options

Location determines which suitable fixing options are available and are permissible.

Fixing options must take into consideration the structural integrity of the building - i.e, is there solid fixing available? Also ensuring the watertight integrity of the building is not compromised. .

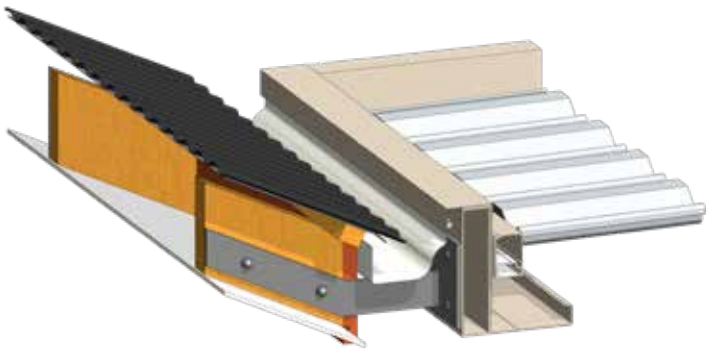

2C. FLUSH TO GUTTER. BRACKET FIXED TO RAFTER.
Page 4.20



2D. FLUSH TO GUTTER. FREE STANDING BRACED POST
Page 4.21

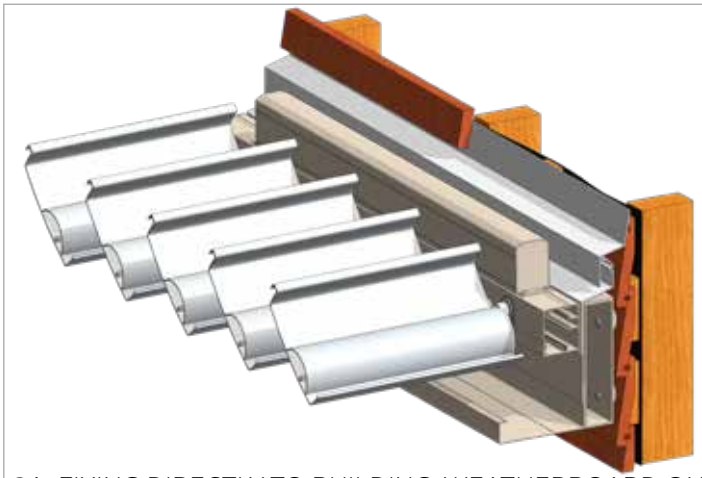

3A. FIXING DIRECTLY TO BUILDING. WEATHERBOARD ON TIMBER FRAME WITH CAVITY. Page 4.22

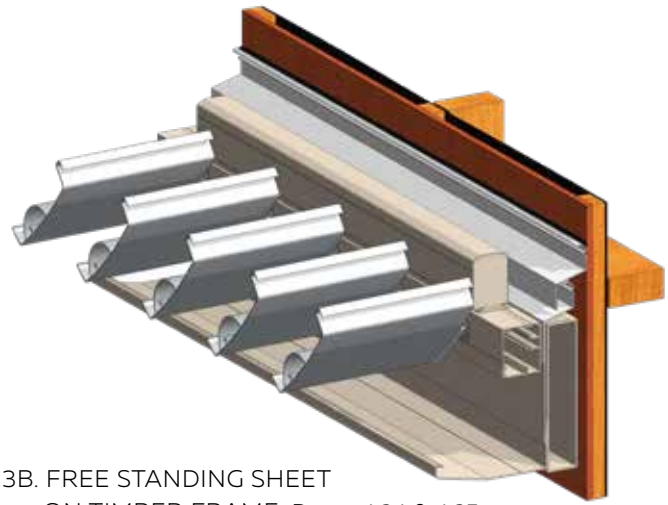

3B. FREE STANDING SHEET ON TIMBER FRAME. Pages 4.24 & 4.25

©Louvretec 2025 - All Rights Reserved. Technical specifications subject to change without notice.

## TYPICAL DETAIL : OPTION 1A. OPENING FRAME OVER EXISTING OPENING ROOF



BRACED OR FREE STANDING POST PROJECTS OPENING ROOF OVER HOUSE ROOF.
ALLOWS STORM-WATER DISPOSAL ONTO EXISTING ROOF. IT IS NOT FLASHED BETWEEN OPENING ROOF AND HOUSE ROOF.

SECTION **OPTION 1A - BRACED OR FREE STANDING POST - OPENING ROOF FRAME IS OVER ROOF.**

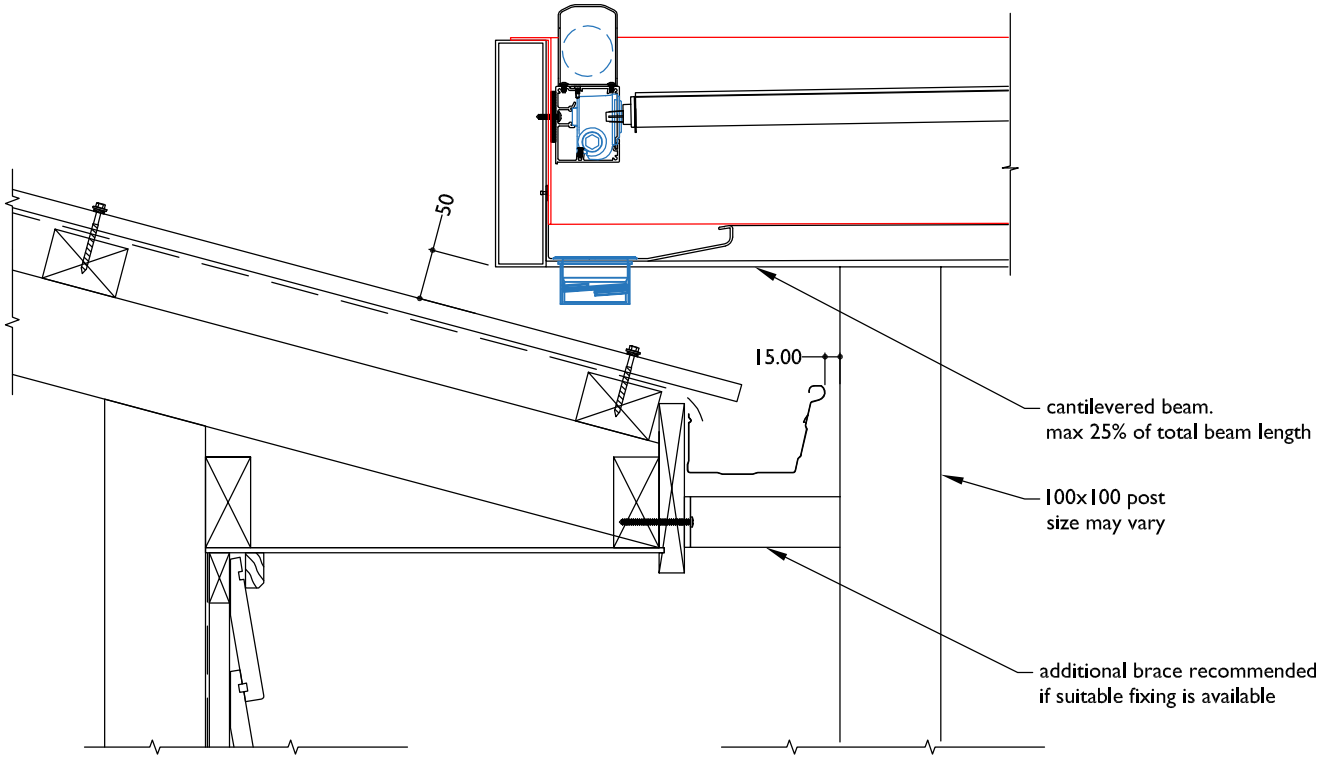


REFER RENDER ABOVE



FILE: STRUCTURAL 4.16 DATE MODIFIED: 01/10/2024 SCALE:

www.louvretec.co.nz www.louvretec.com.au
©Louvretec 2025 - All Rights Reserved. Technical specifications subject to change without notice.

## TYPICAL DETAIL: OPTION 1B. OPENING ROOF FRAME OVER EXISTING ROOF

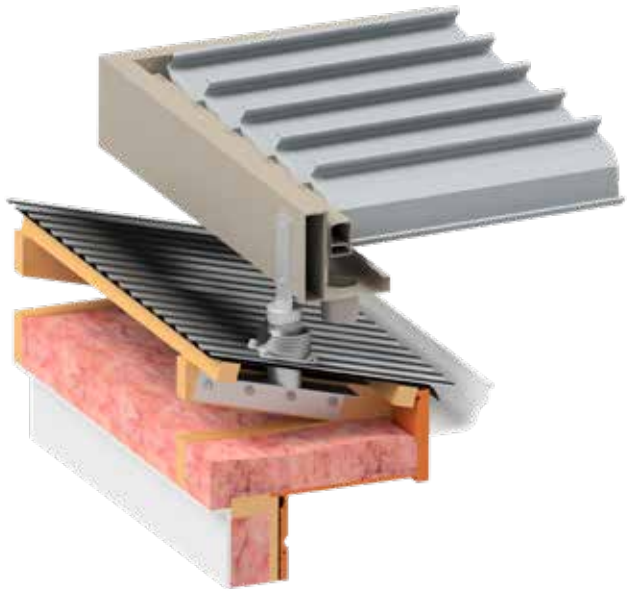

FIXING BRACKET CONNECTED TO RAFTERS AND FLASHED ACCORDINGLY.
ROOF IRON OR TILES NEED TO BE LIFTED FOR BRACKET INSTALLATION.

SECTION **OPTION 1B - ROOF BRACKET - OPENING ROOF FRAME FIXED OVER ROOF**

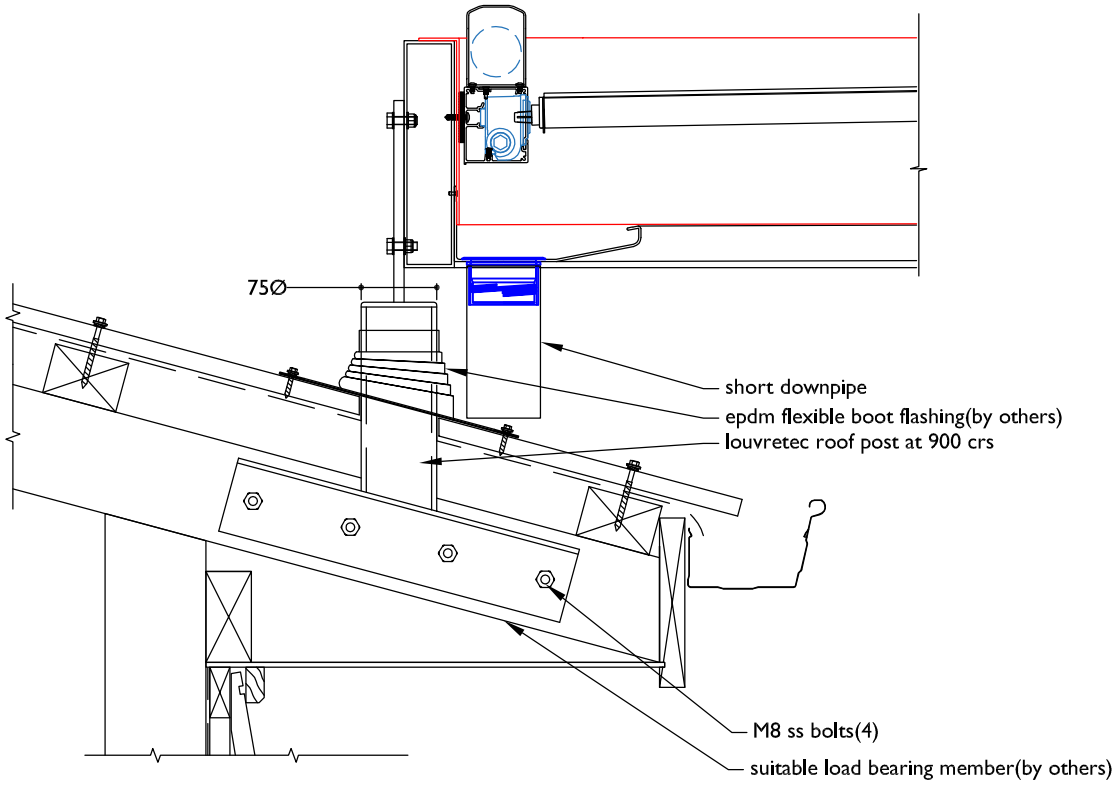


REFER RENDER ABOVE


©Louvretec 2025 – All Rights Reserved. Technical specifications subject to change without notice.

## TYPICAL DETAIL : OPTION 2A. FLUSH TO GUTTER - FASCIA FIXED

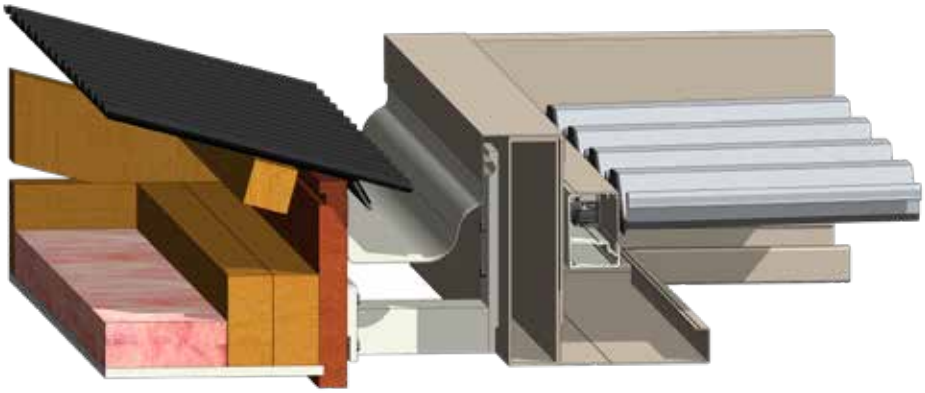

BRACKET FIXED TO FASCIA. BOX SECTION SITS ABOVE GUTTER WITH CAP FLASHING INTO GUTTER.

SECTION **OPTION 2A - FRAME TO FASCIA - FASCIA BRACKET**

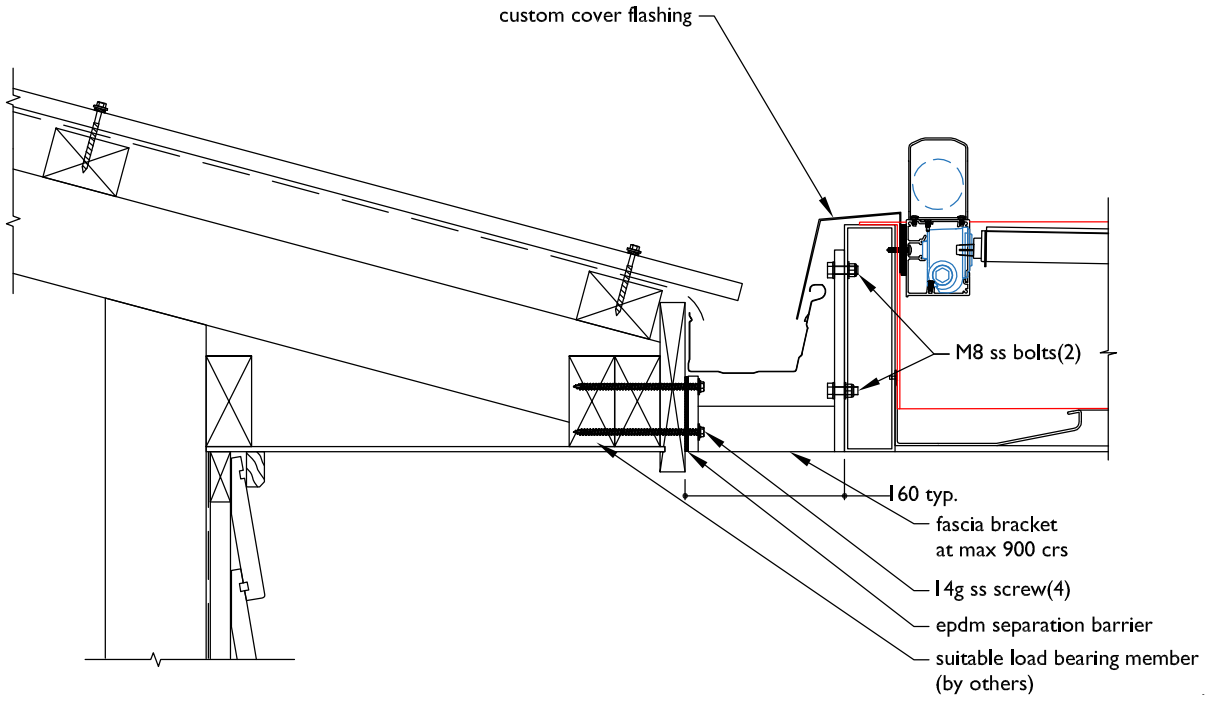


REFER RENDER ABOVE



FILE: STRUCTURAL 4.18 DATE MODIFIED: 01/10/2024 SCALE:

www.louvretec.co.nz www.louvretec.com.au

©Louvretec 2025 - All Rights Reserved. Technical specifications subject to change without notice.

## TYPICAL DETAIL: OPTION 2B. FLUSH TO GUTTER - SOFFIT FIXED

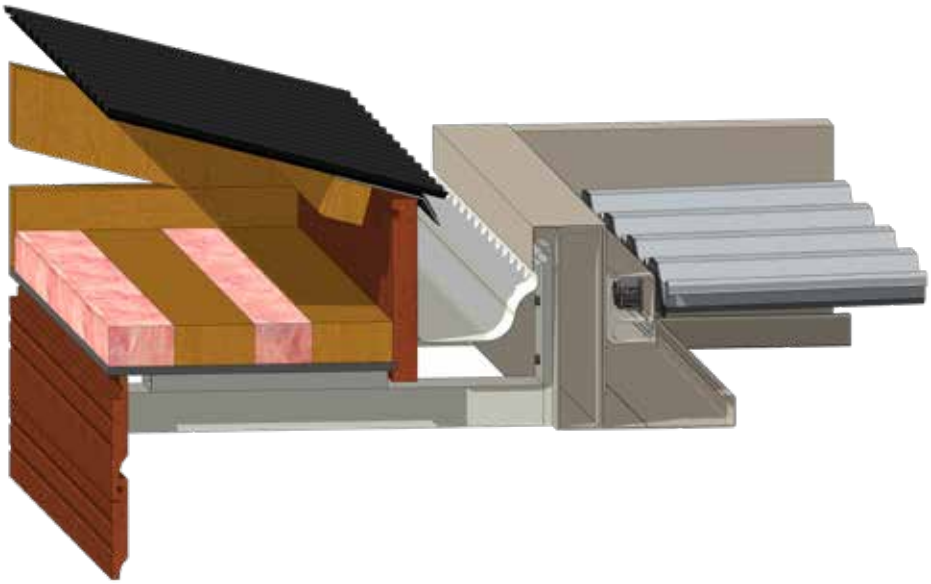

BRACKET FIXED TO UNDERSIDE OF SOFFIT. BOX SECTION SITS ABOVE GUTTER WITH FLASHING INTO GUTTER.

SECTION **OPTION 2B - FRAME TO FASCIA - SOFFIT BRACKET**

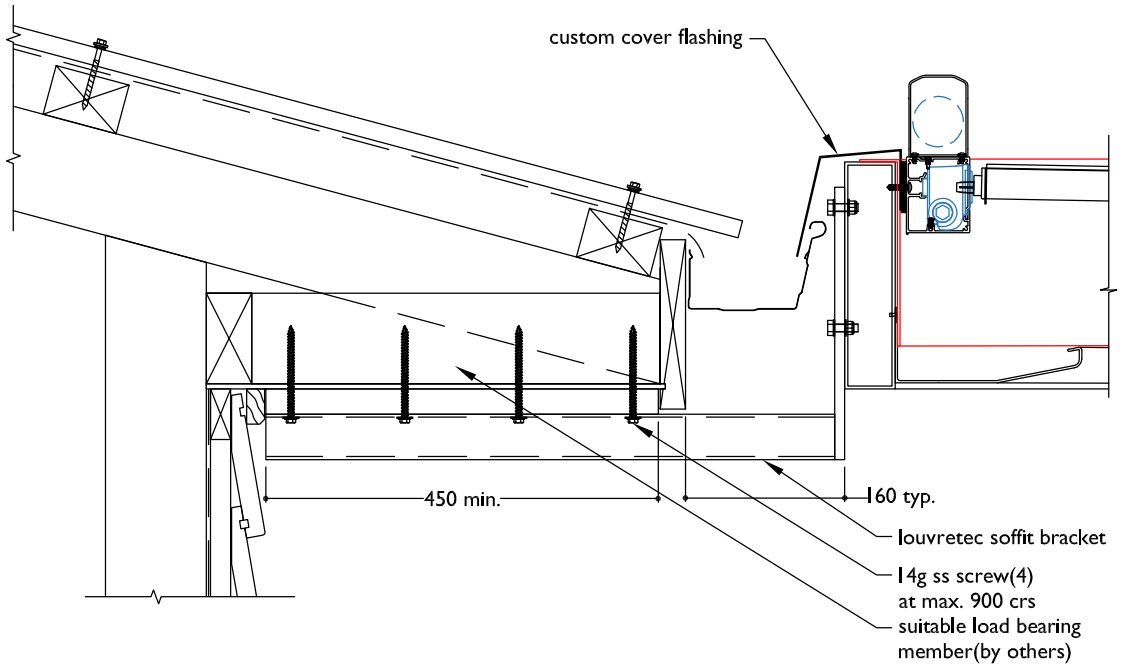


REFER RENDER ABOVE


©Louvretec 2025 - All Rights Reserved. Technical specifications subject to change without notice.

## TYPICAL DETAIL : OPTION 2C. FLUSH TO GUTTER - RAFTER FIXED

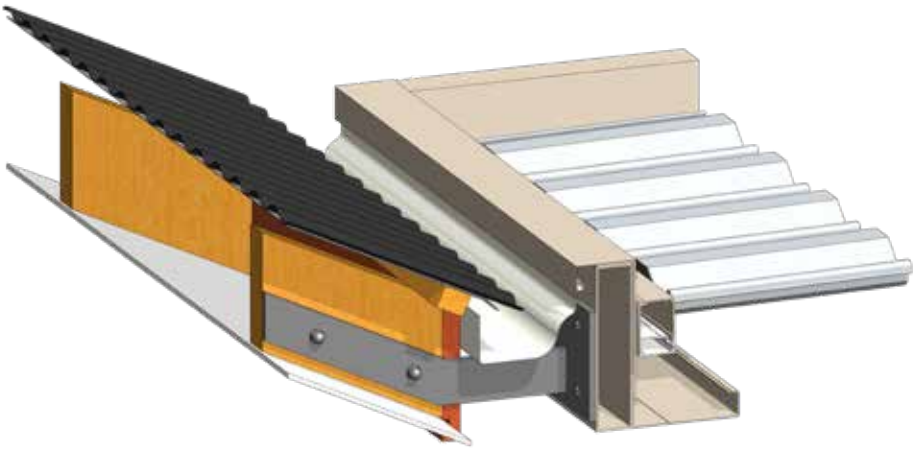

BRACKET FIXED TO RAFTER. BOX SECTION SITS ABOVE GUTTER WITH CAP FLASHING INTO GUTTER.

SECTION **OPTION 2C - FLUSH TO GUTTER - TRUSS OR RAFTER FIXING**

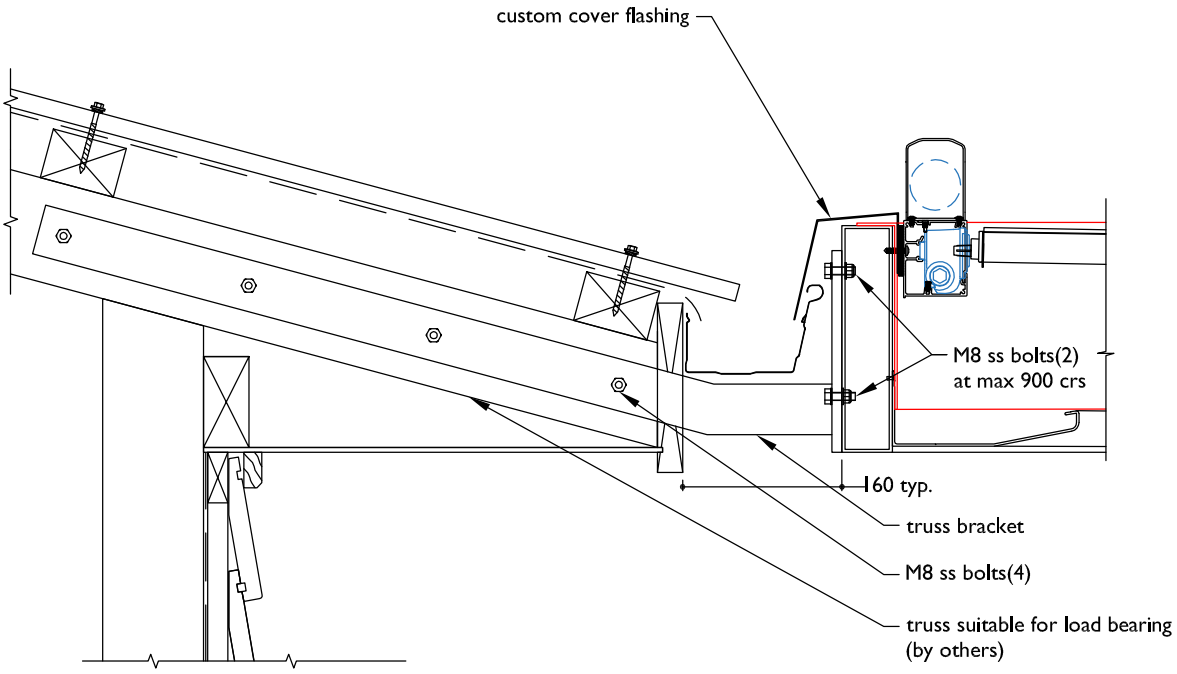


REFER RENDER ABOVE



FILE: STRUCTURAL 4.20 DATE MODIFIED: 01/10/2024 SCALE:

www.louvretec.co.nz www.louvretec.com.au

©Louvretec 2025 - All Rights Reserved. Technical specifications subject to change without notice.

## TYPICAL DETAIL: 2D. FLUSH TO GUTTER - FREE STANDING



FREE STANDING POST SUPPORTS BOX SECTION ABOVE GUTTER, WITH CAP FLASHING INTO GUTTER.
USE THIS OPTION WHEN THERE ARE NO OTHER FIXING POINTS AND THE HOUSE CLADDING IS NOT SUITABLE FOR STRUCTURAL FIXING.
IF FIXING CAN BE FOUND FOR THE POST THIS WILL HELP STABILITY OF FRAME.

SECTION **OPTION 2D - FRAME TO FASCIA - FREE STANDING OR BRACED POST**

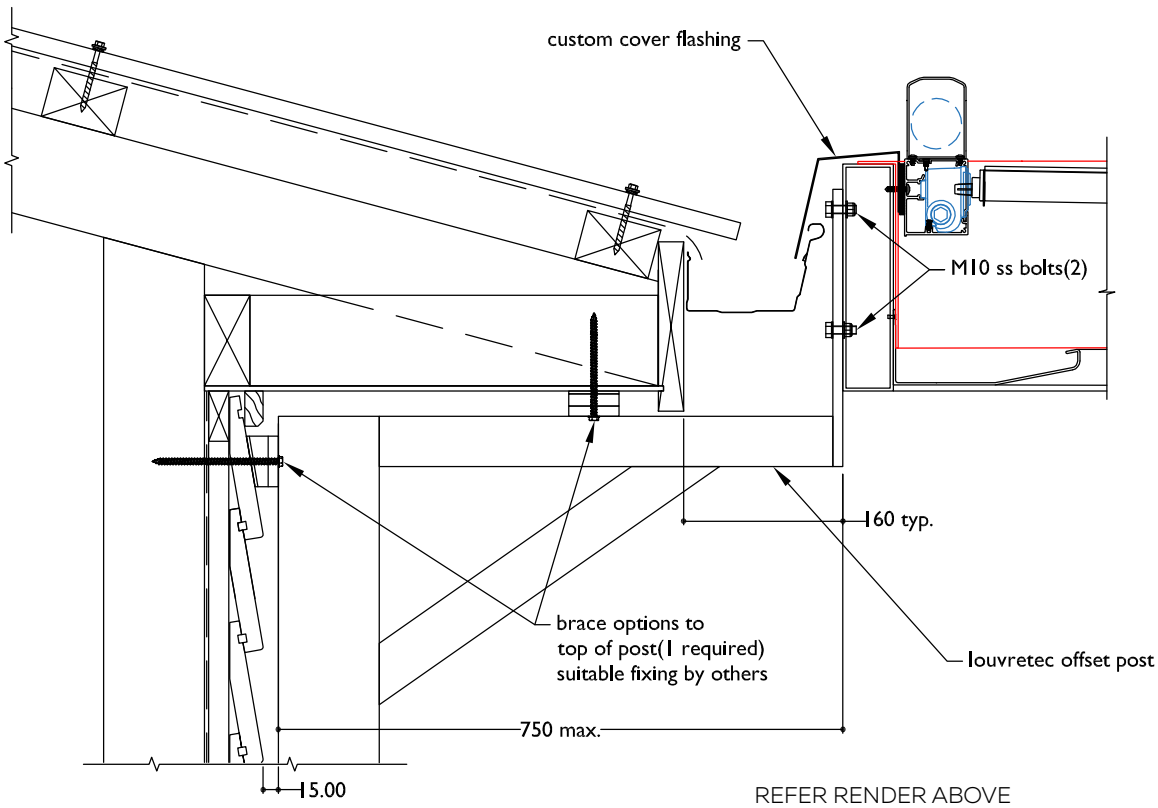


REFER RENDER ABOVE


©Louvretec 2025 - All Rights Reserved. Technical specifications subject to change without notice.

## TYPICAL DETAIL : OPTION 3A. FIXED DIRECTLY TO BUILDING

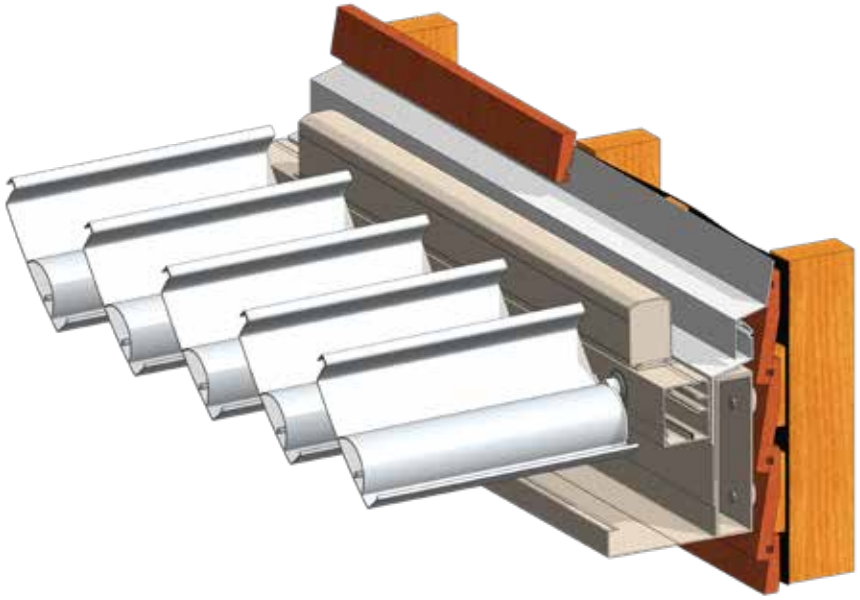

FIXED TO WEATHERBOARD CLADDING ON TIMBER FRAME WITH CAVITY.
SEE ALSO OPTION FIXED WITH NO CAVITY AND FREE STANDING.

SECTION **OPTION 3A - WEATHERBOARD ON TIMBER FRAME FREE STANDING**

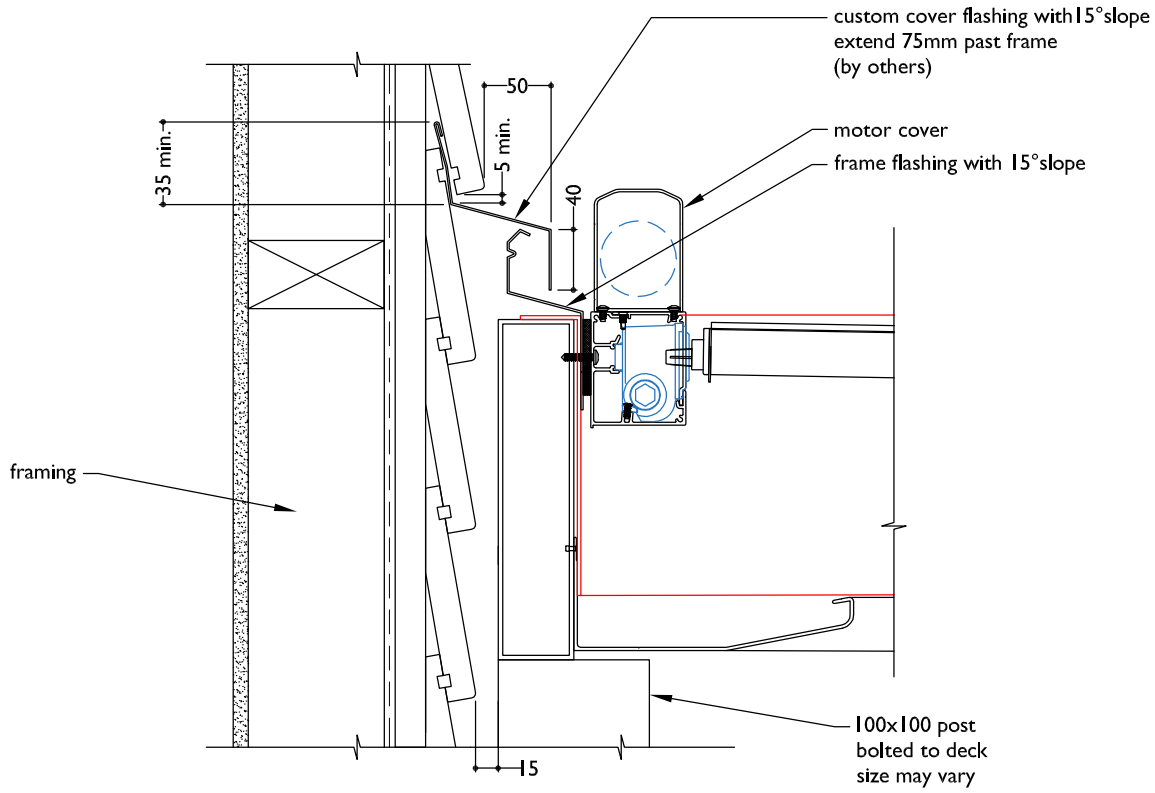


REFER RENDER ABOVE


FILE: STRUCTURAL 4.22 DATE MODIFIED: 01/10/2024 SCALE:
www.louvretec.co.nz www.louvretec.com.au
©Louvretec 2025 - All Rights Reserved. Technical specifications subject to change without notice.

## SECTION **OPTION 3A - WEATHERBOARD ON TIMBER FRAME WITH CAVITY**

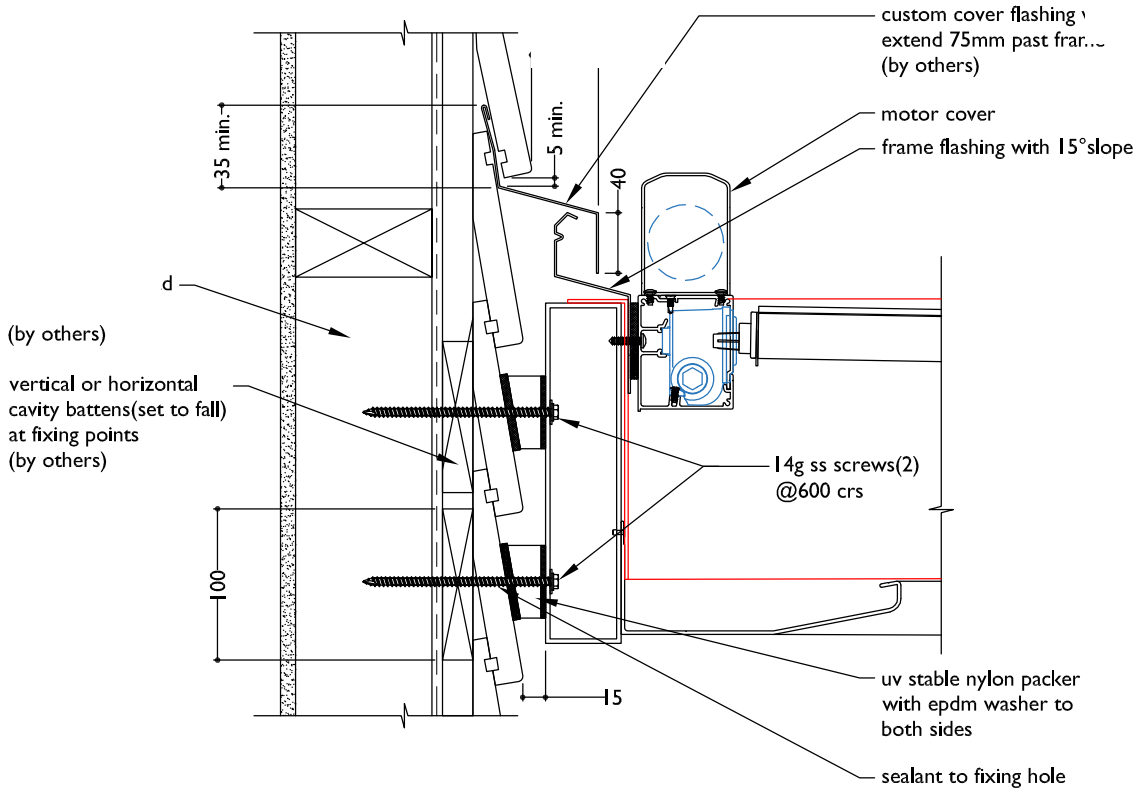


## SECTION **OPTION 3A - WEATHERBOARD ON TIMBER FRAME**

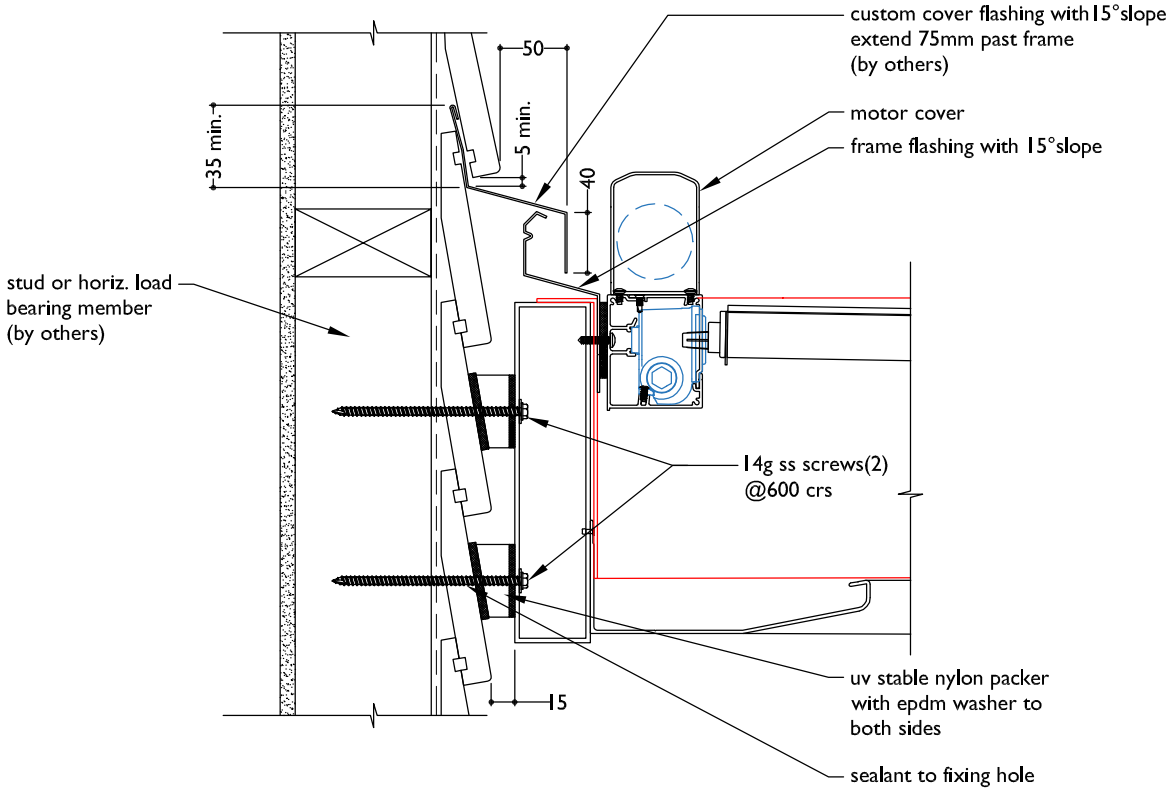


REFER RENDER PREVIOUS PAGE


©Louvretec 2025 – All Rights Reserved. Technical specifications subject to change without notice.

## TYPICAL DETAIL : OPTION 3B. FREE STANDING

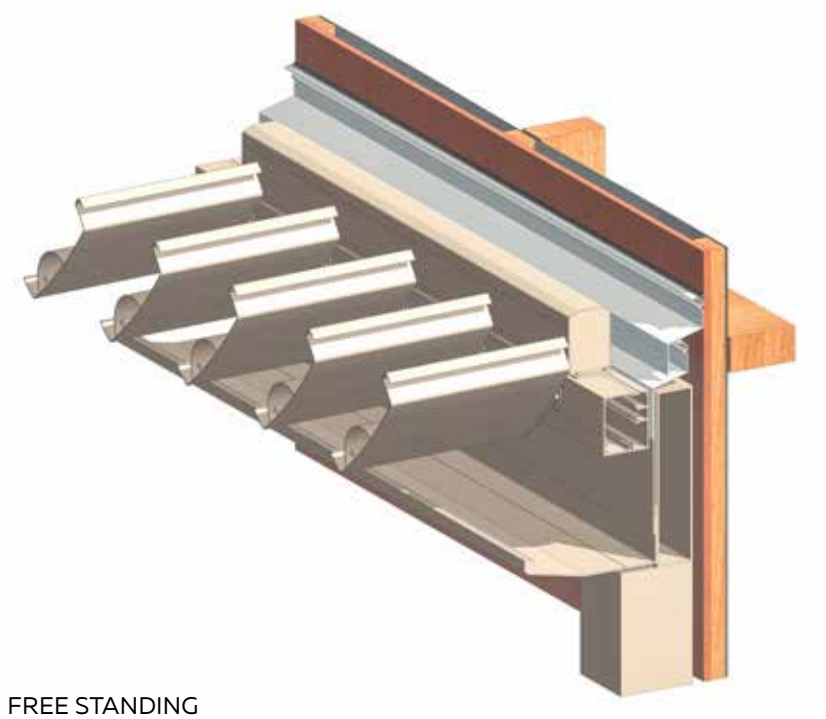

FREE STANDING

SECTION **OPTION 3B SHEET ON TIMBER FRAME - FREE STANDING**

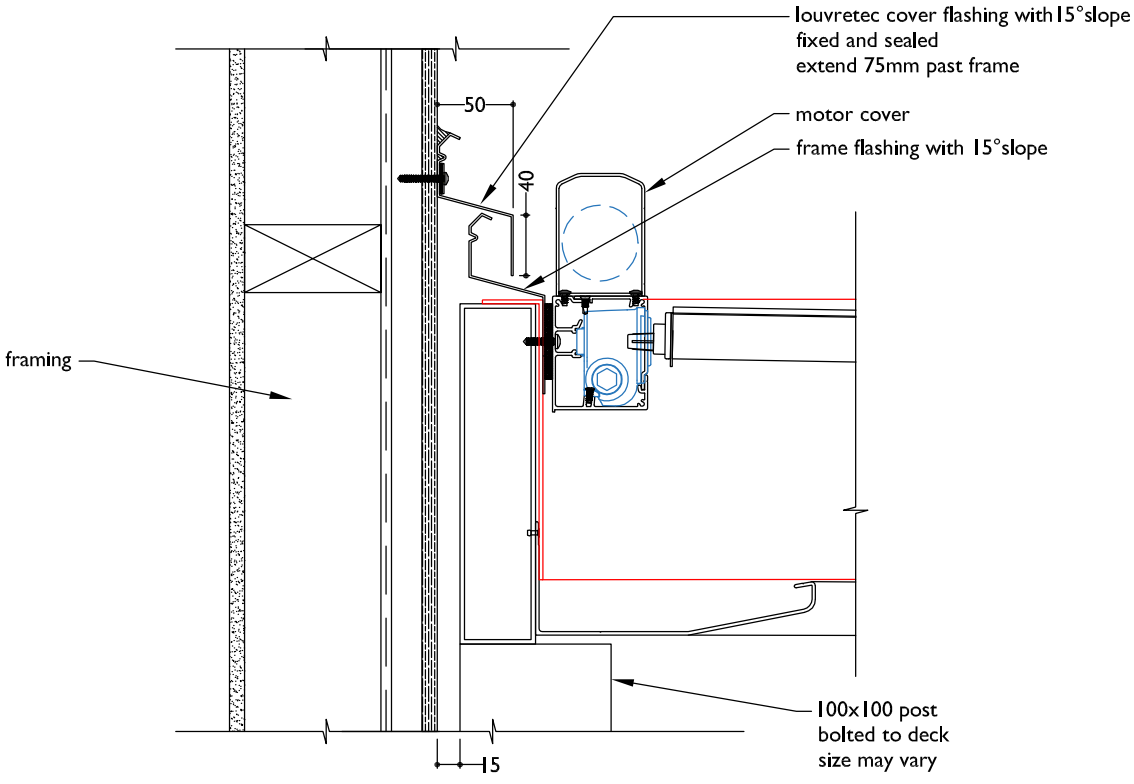




FILE: STRUCTURAL 4.24 DATE MODIFIED: 01/10/2024 SCALE:

www.louvretec.co.nz www.louvretec.com.au
©Louvretec 2025 - All Rights Reserved. Technical specifications subject to change without notice.

## TYPICAL DETAIL : OPTION 3B. FIXED DIRECTLY TO BUILDING

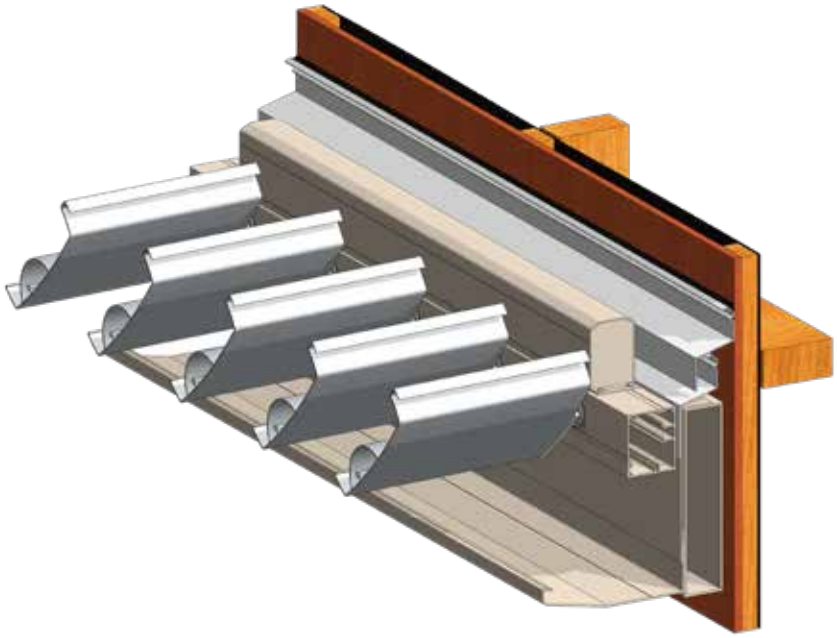

STRUCTURAL FRAME FIXED TO SHEET ON TIMBER FRAME.

SECTION **OPTION 3B SHEET ON TIMBER FRAME. FIXED COVER FLASHING**

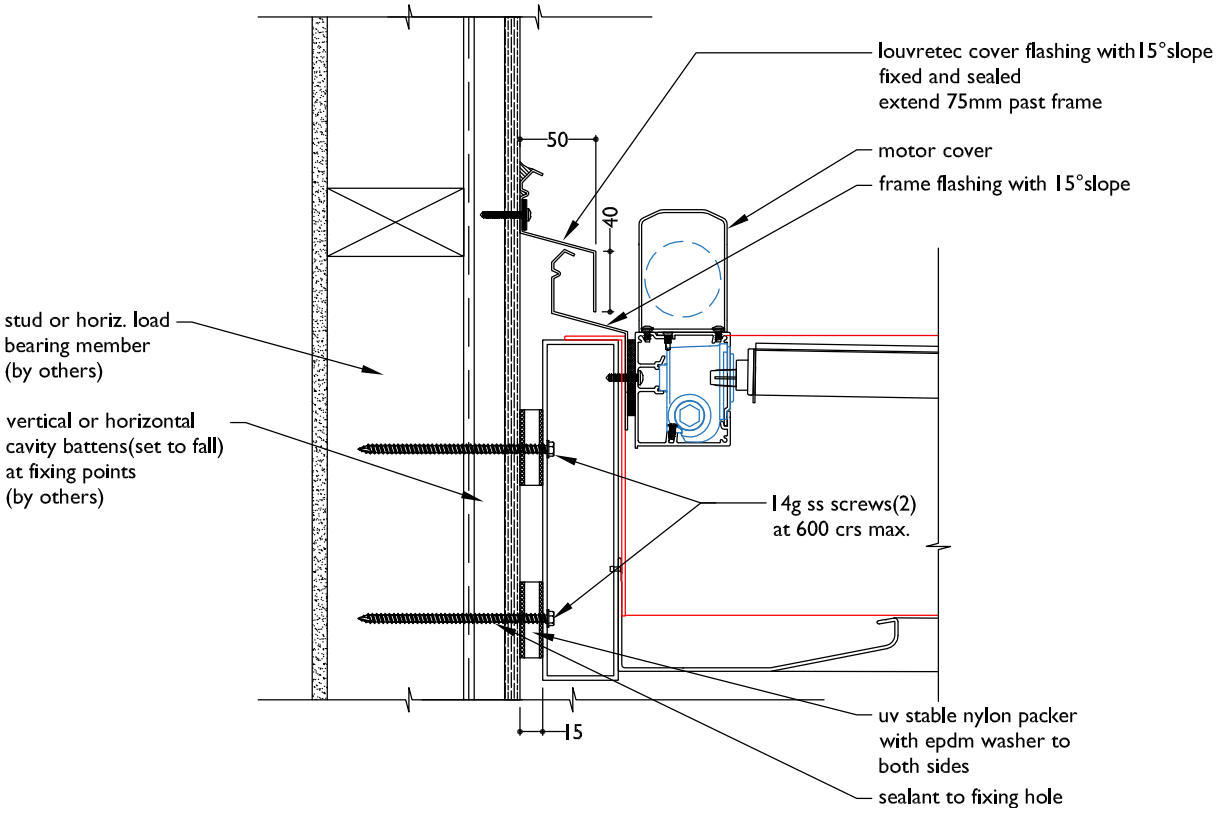



©Louvretec 2025 – All Rights Reserved. Technical specifications subject to change without notice.

## TYPICAL DETAIL : OPENING ROOFS STRUCTURAL FRAME CONNECTING TO THE BUILDING

SECTION **OPTION 3B SHEET ON TIMBER FRAME**

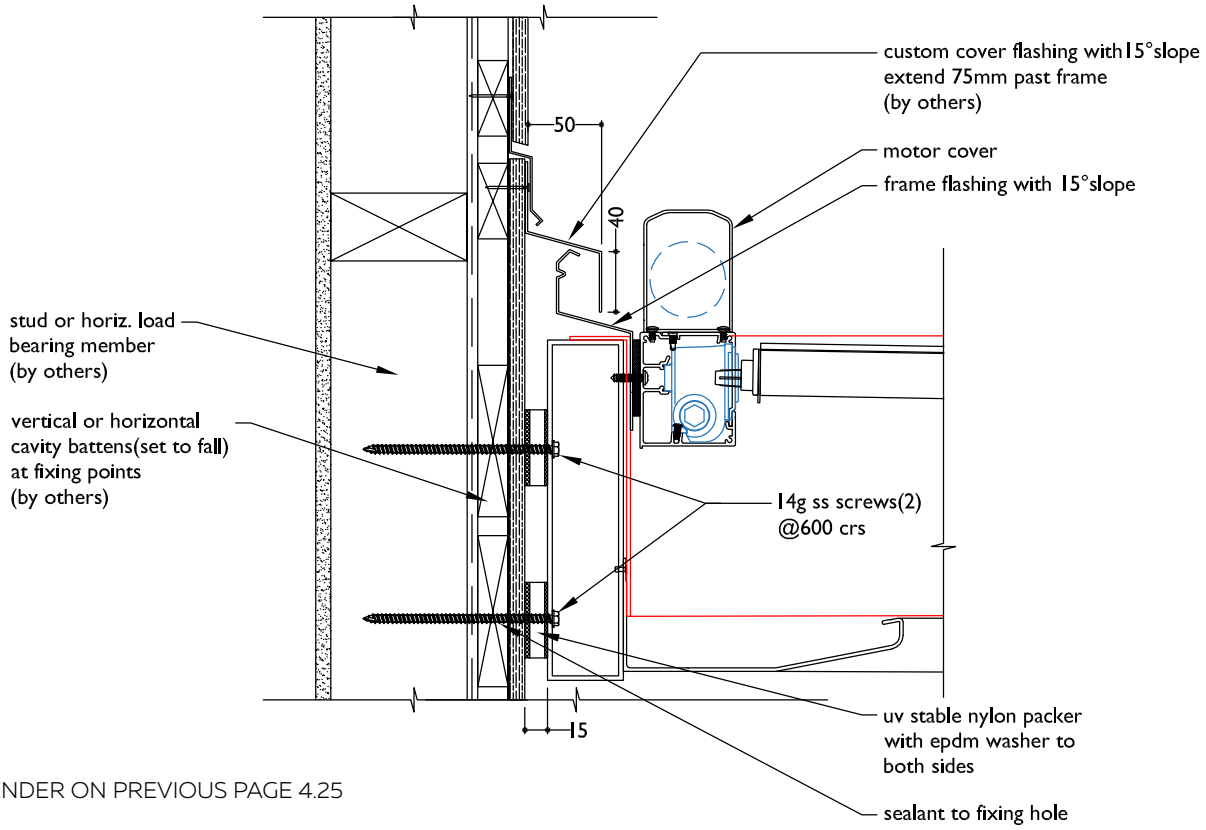


REFER RENDER ON PREVIOUS PAGE 4.25

SECTION **BRICK ON TIMBER FRAME**

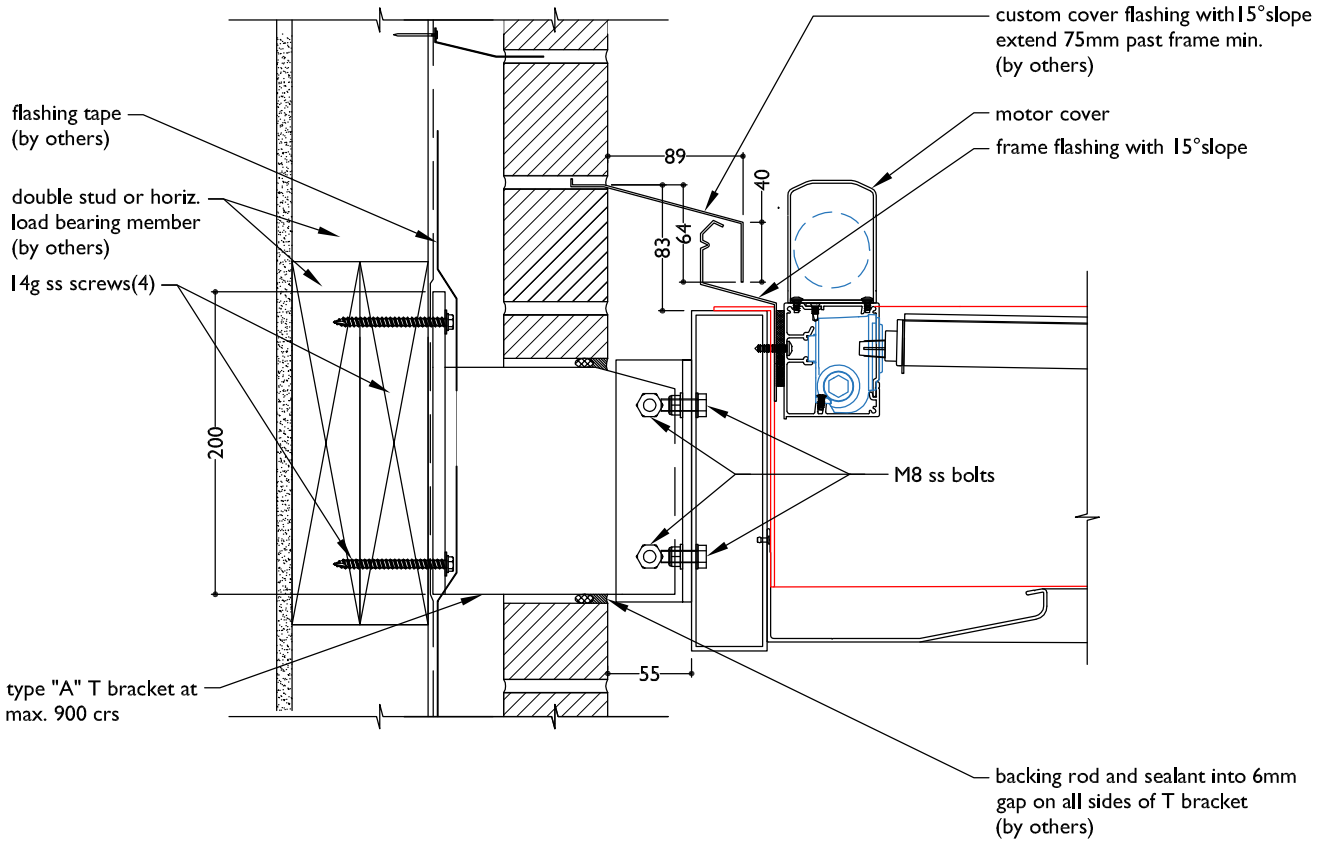




FILE: STRUCTURAL 4.26 DATE MODIFIED: 01/10/2024 SCALE:

www.louvretec.co.nz www.louvretec.com.au

©Louvretec 2025 - All Rights Reserved. Technical specifications subject to change without notice.

SECTION **BRICK ON TIMBER FRAME FREE STANDING**
**FIXED COVER FLASHING**

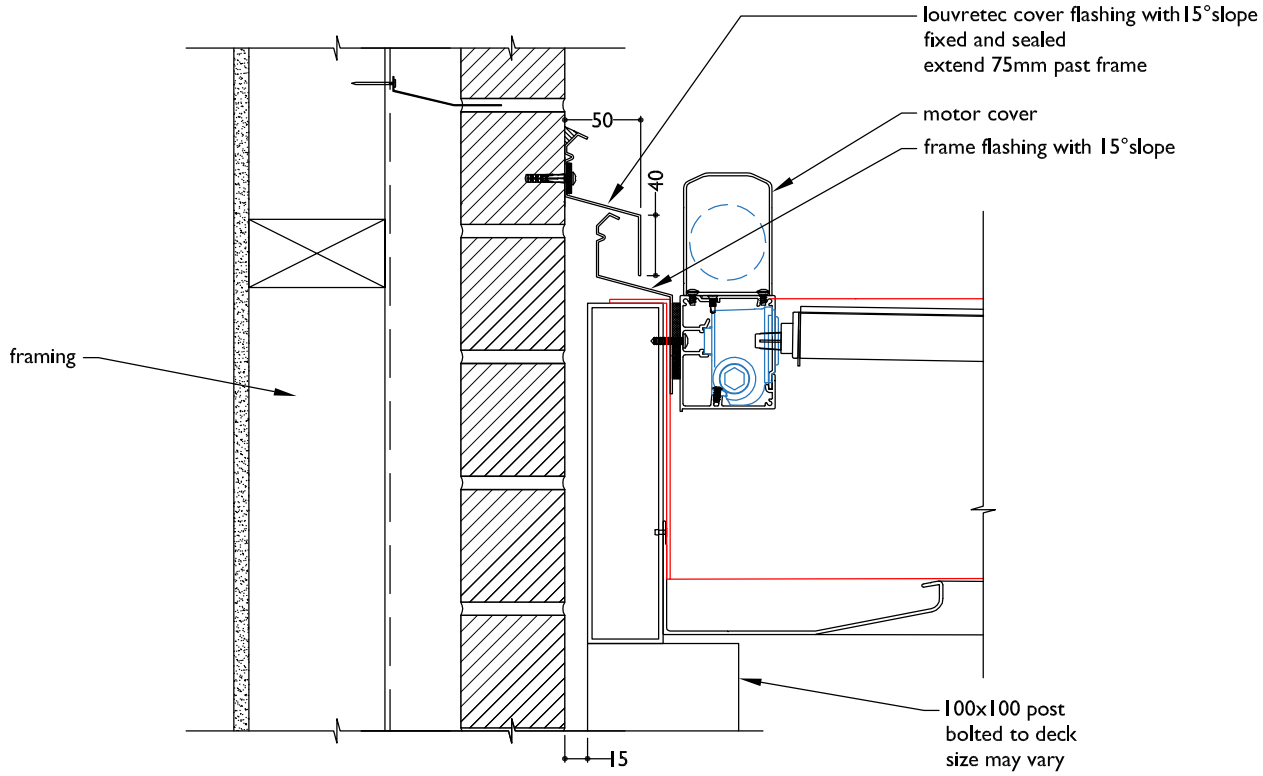


SECTION **COMPOSITE PANEL ON TIMBER FRAME FREE STANDING**
**FIXED COVER FLASHING**

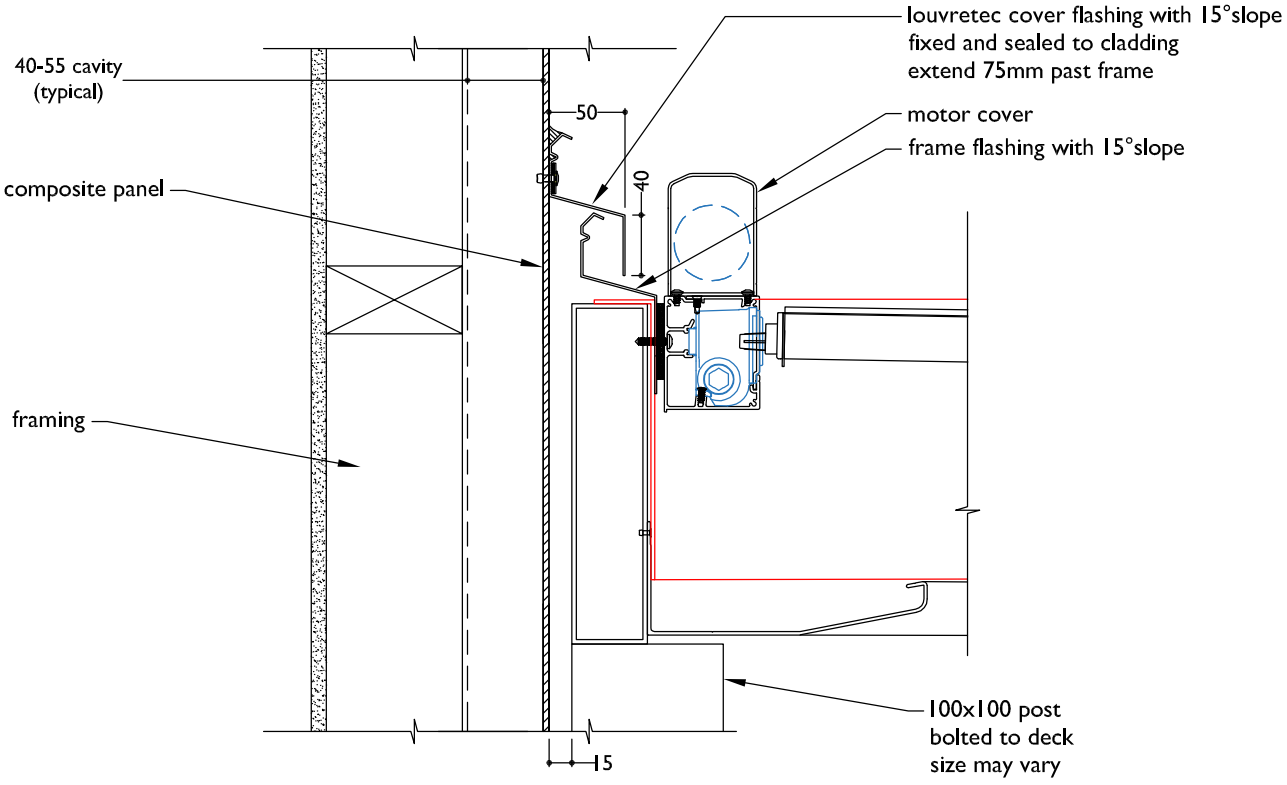



©Louvretec 2025 – All Rights Reserved. Technical specifications subject to change without notice.

## TYPICAL DETAIL : OPENING ROOFS STRUCTURAL FRAME CONNECTING TO THE BUILDING

### SECTION **COMPOSITE PANEL ON TIMBER FRAME**

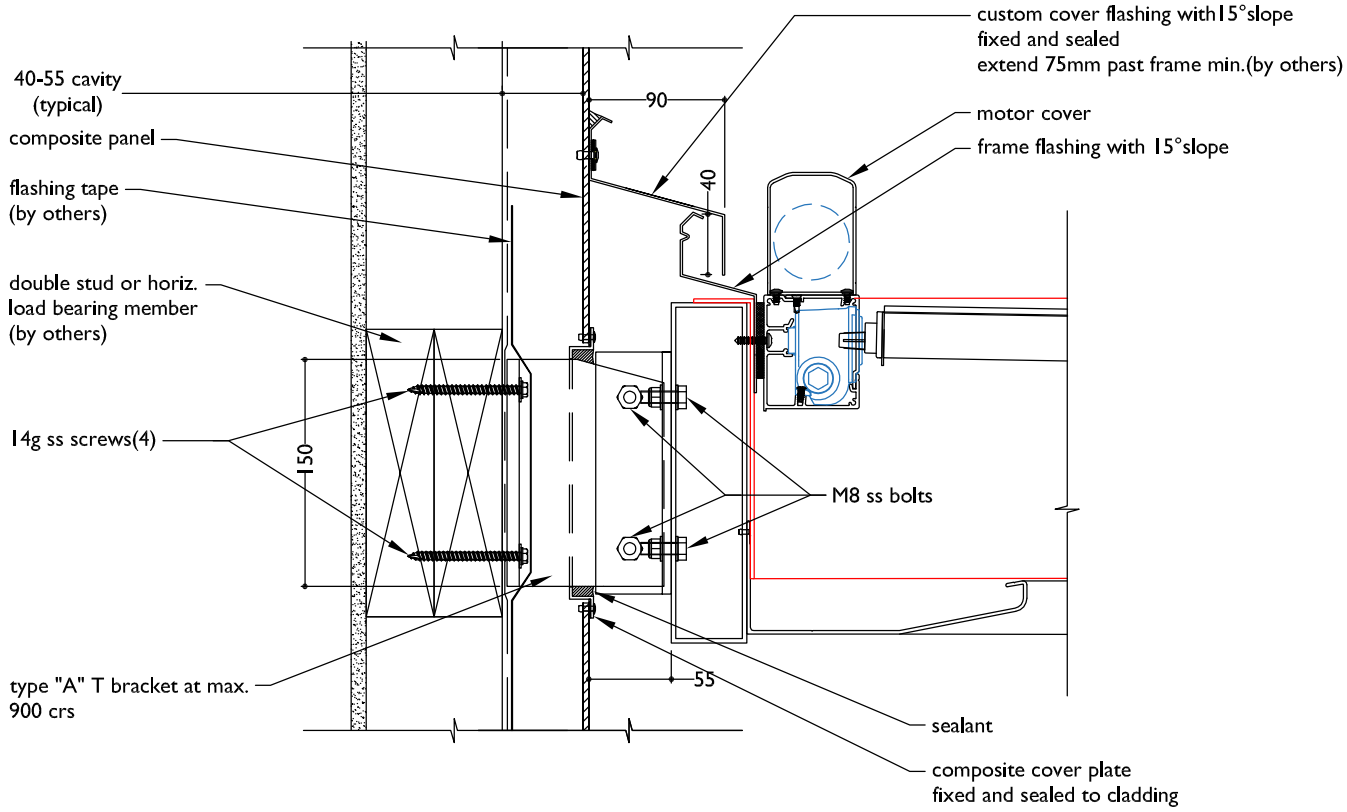


### SECTION **BRICK ON TIMBER FRAME - FREE STANDING BONDED COVER FLASHING**

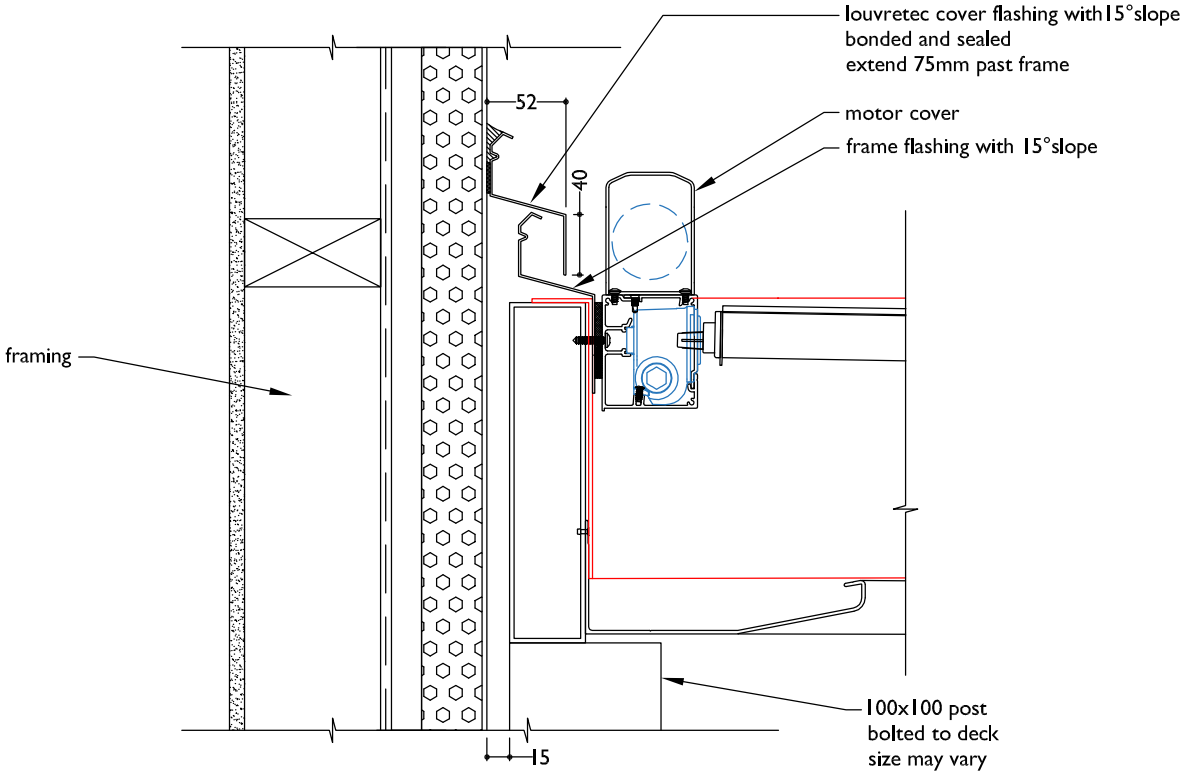




FILE: STRUCTURAL 4.28 DATE MODIFIED: 01/10/2024 SCALE:

www.louvretec.co.nz www.louvretec.com.au

©Louvretec 2025 - All Rights Reserved. Technical specifications subject to change without notice.

## SECTION **POLYSTYRENE ON TIMBER FRAME - FIXED TO BUILDING**
## **BONDED COVER FLASHING**

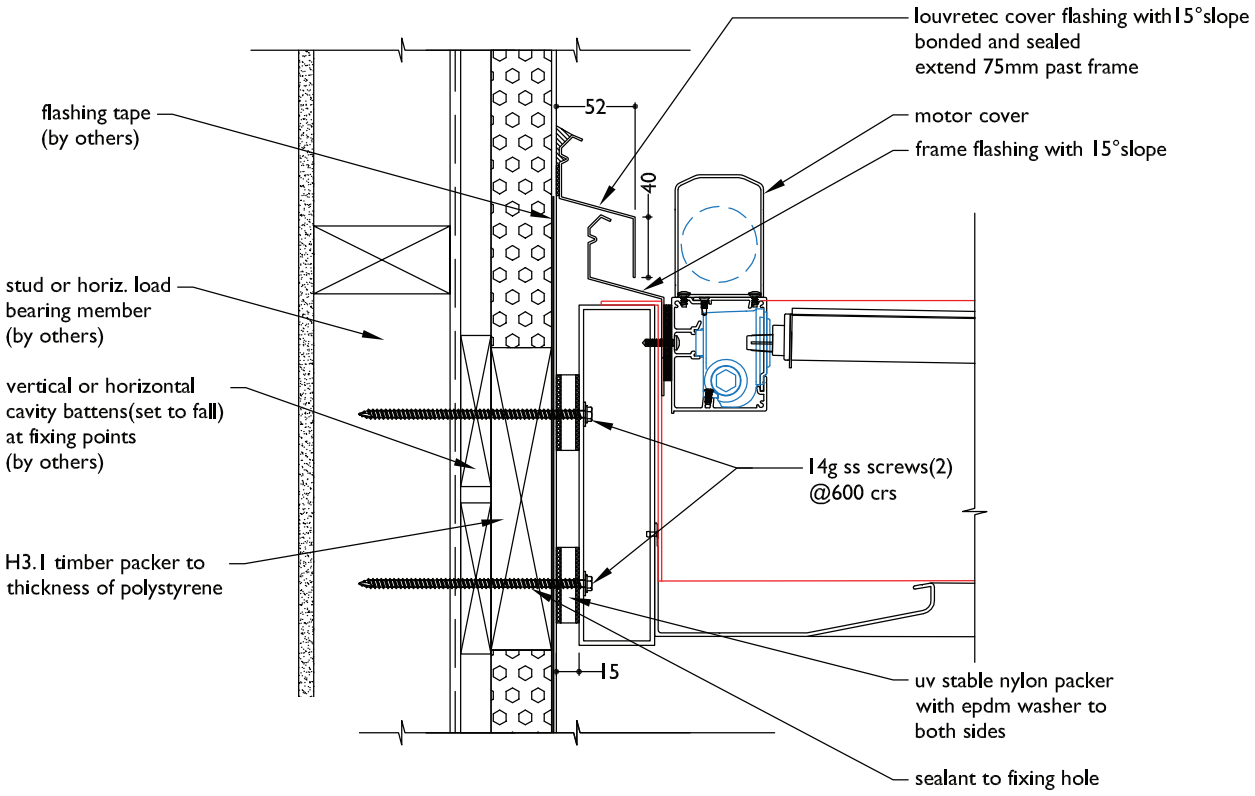


## SECTION **CONCRETE - FREE STANDING**
## **FIXED COVER FLASHING**

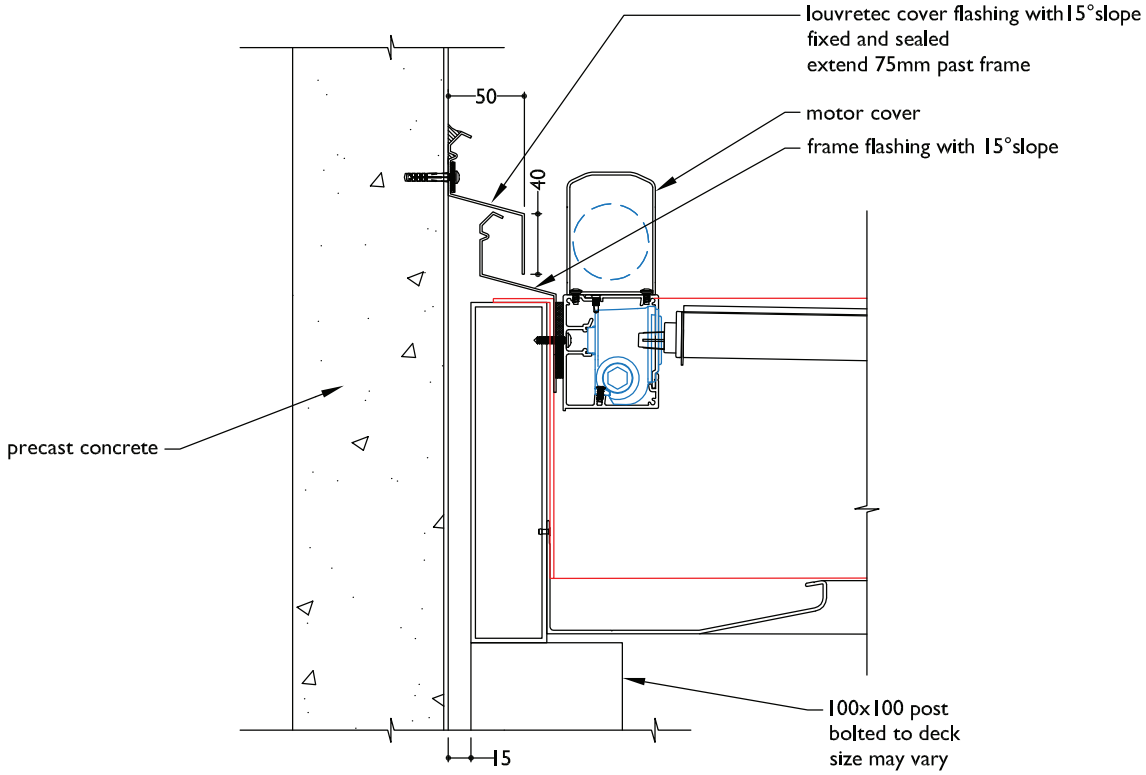



©Louvretec 2025 - All Rights Reserved. Technical specifications subject to change without notice.

## TYPICAL DETAIL : OPENING ROOFS STRUCTURAL FRAME CONNECTING TO THE BUILDING

SECTION **CONCRETE WITH CHASE**

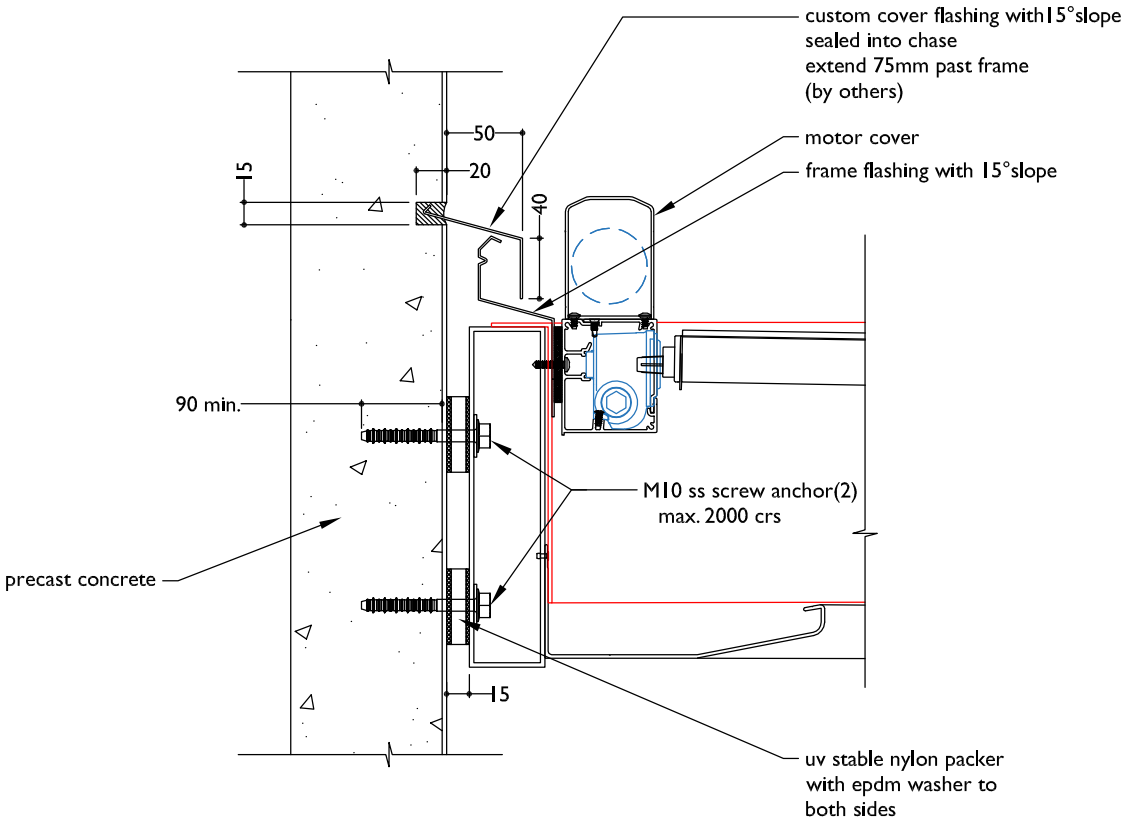


SECTION **CONCRETE NO CHASE. FIXED COVER FLASHING**

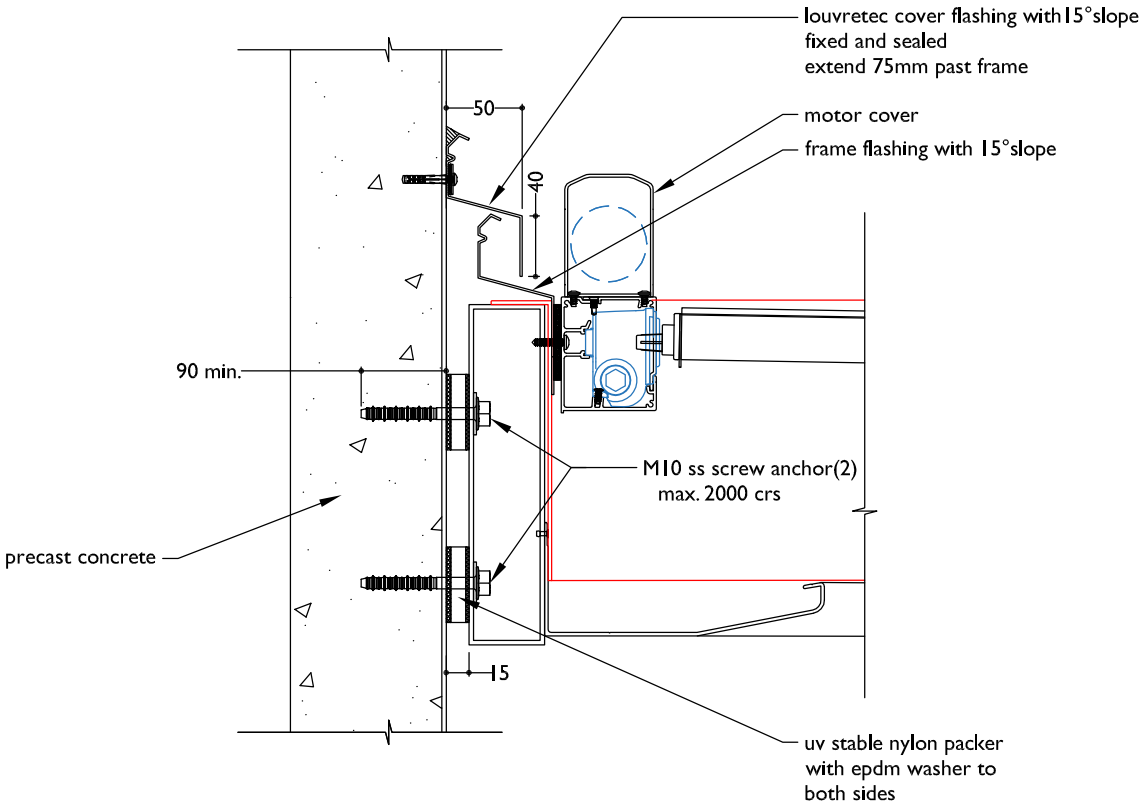




FILE: STRUCTURAL 4.30 DATE MODIFIED: 01/10/2024 SCALE:

www.louvretec.co.nz www.louvretec.com.au

©Louvretec 2025 - All Rights Reserved. Technical specifications subject to change without notice.

## TYPICAL DETAIL: FIXING OPENING ROOF FIXING TO P.F.C

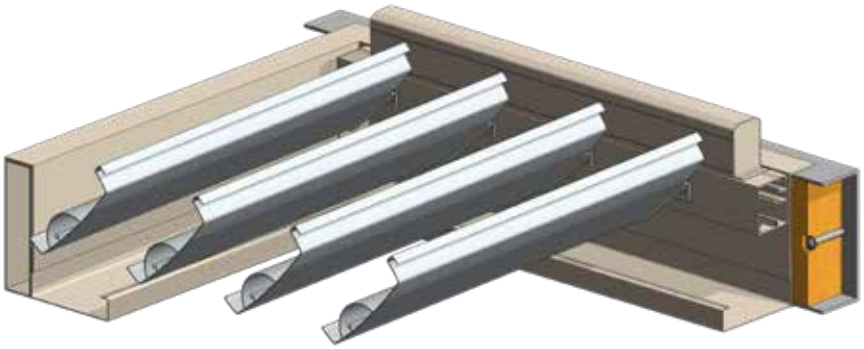

INSIDE FACE MUST BE FLUSH TO FIT THE OPENING ROOF GUTTER AND PIVOT SYSTEM ONTO.

SECTION **PFC WITH WELDED STUDS FOR TIMBER INFILL**

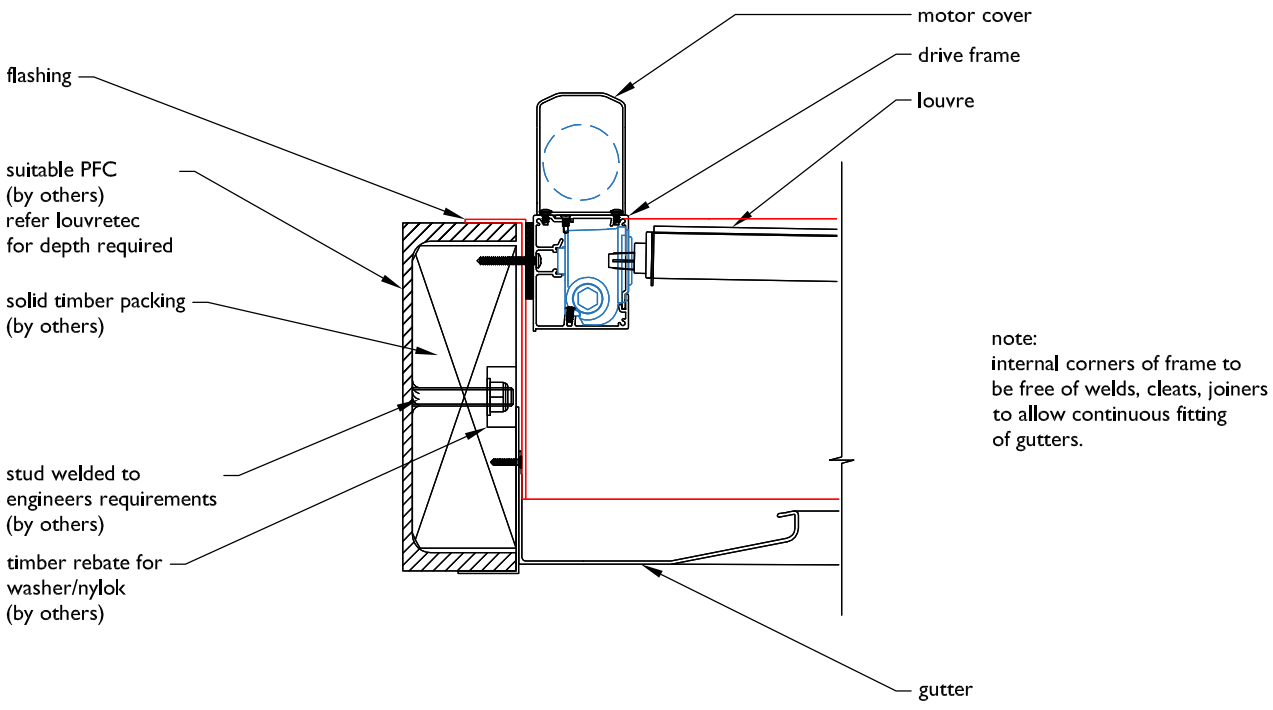



©Louvretec 2025 – All Rights Reserved. Technical specifications subject to change without notice.

## TYPICAL DETAIL : OPENING ROOFS STRUCTURAL FRAME CONNECTING TO THE BUILDING

### SECTION **PFC WITH BOLTED TIMBER INFILL**

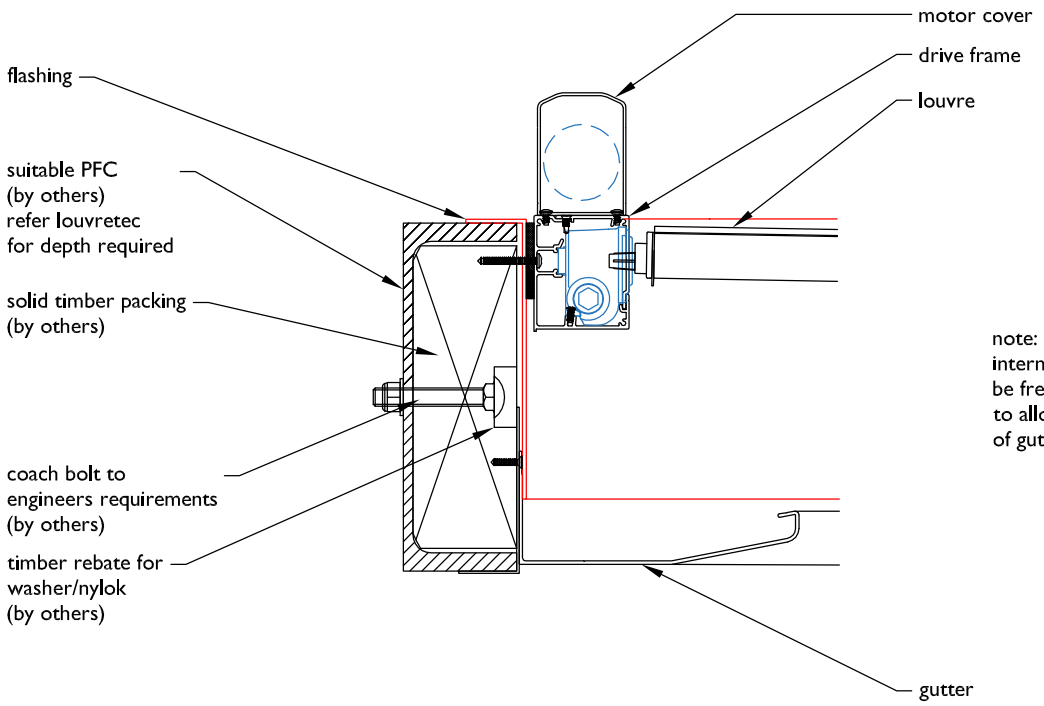


note:
internal corners of frame to be free of welds, cleats, joiners to allow continuous fitting of gutters.

### SECTION **STEEL RHS**

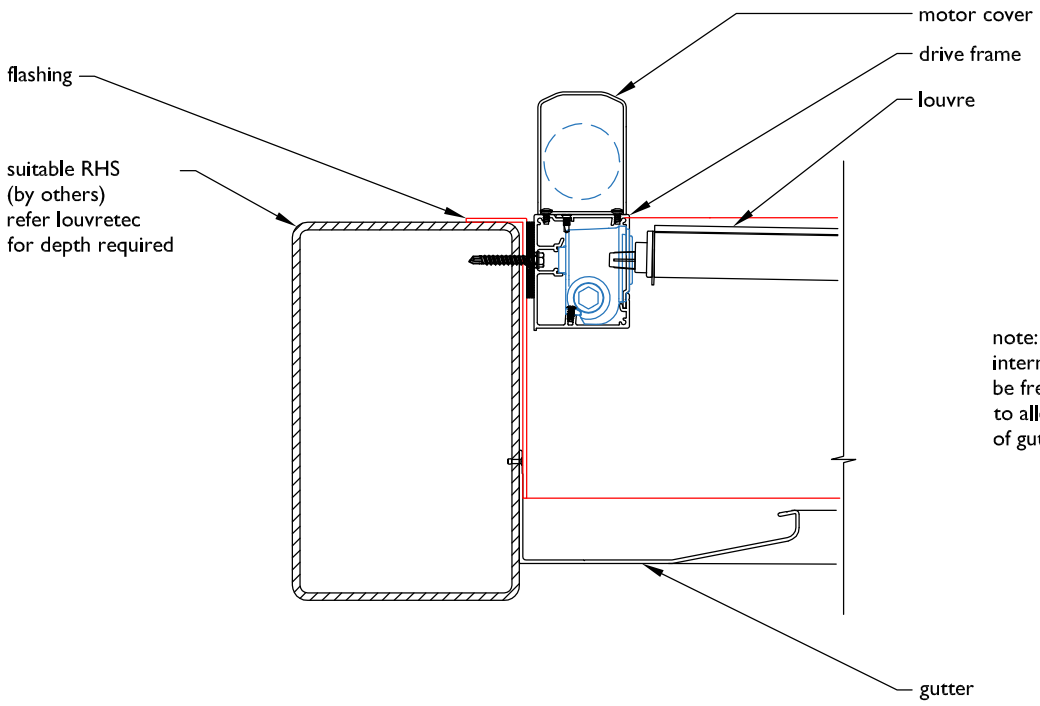


note:
internal corners of frame to be free of welds, cleats, joiners to allow continuous fitting of gutters.



FILE: STRUCTURAL 4.32 DATE MODIFIED: 01/10/2024 SCALE:

www.louvretec.co.nz www.louvretec.com.au

©Louvretec 2025 - All Rights Reserved. Technical specifications subject to change without notice.

## TYPICAL DETAIL: OPENING ROOF FIXING TO TIMBER BEAM

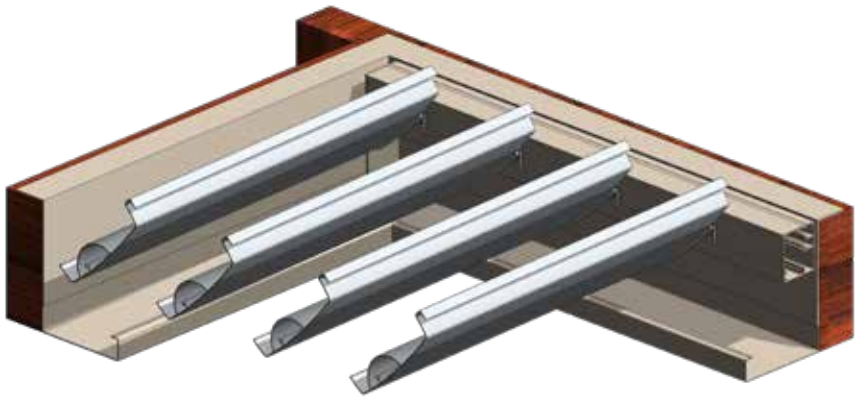

TO REDUCE TWISTING, WARPING OR MOVEMENT, GLULAM LAMINATED BEAMS (OR SIMILAR) ARE RECOMMENDED.

SECTION **TIMBER BEAM**

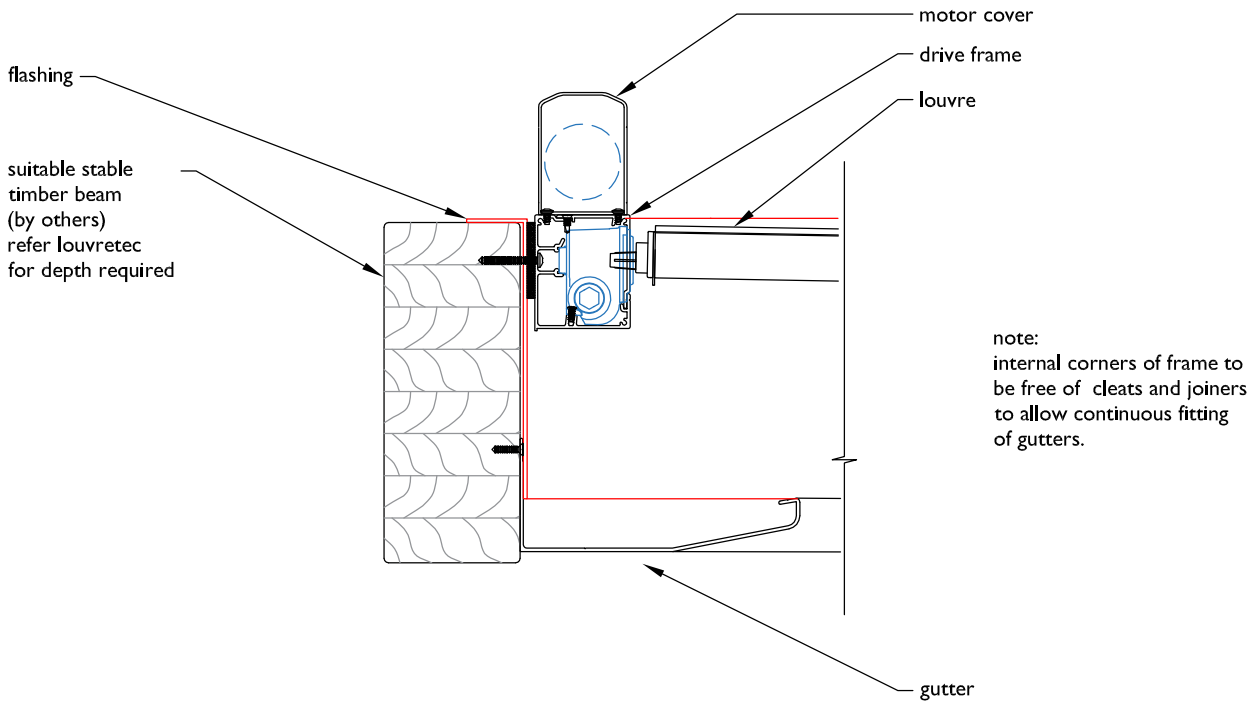



©Louvretec 2025 – All Rights Reserved. Technical specifications subject to change without notice.

## TYPICAL DETAIL : OPENING ROOFS STRUCTURAL FRAME CONNECTING TO THE BUILDING

SECTION **STEEL UNIVERSAL BEAM**

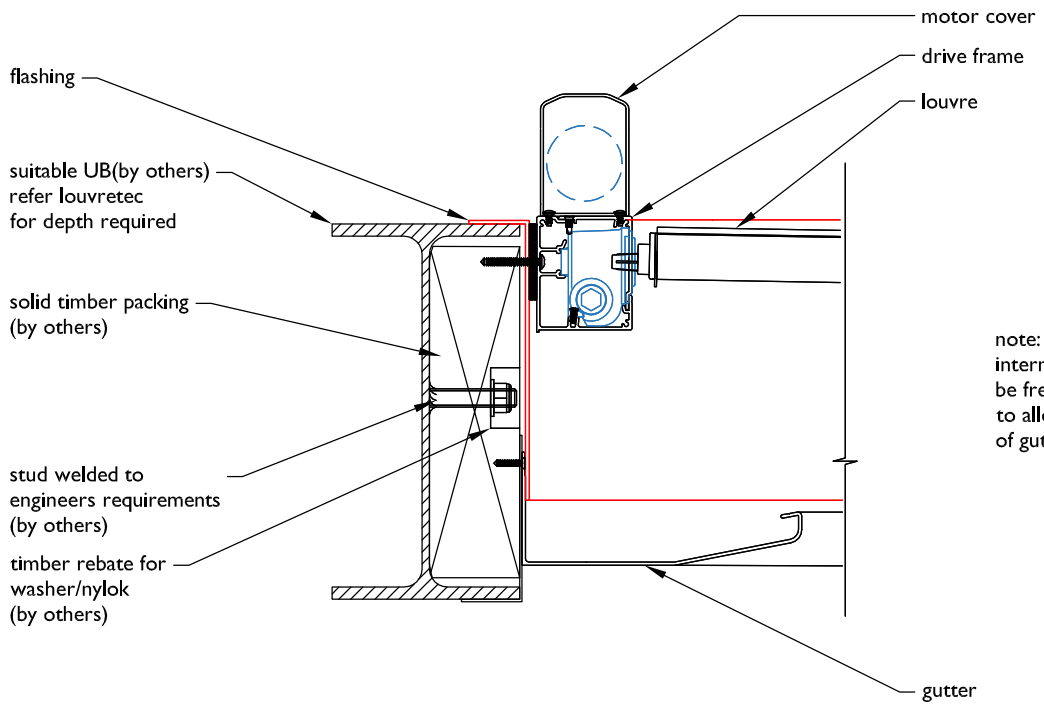


note:
internal corners of frame to be free of welds, cleats, joiners to allow continuous fitting of gutters.

SECTION **CONCRETE BEAM**

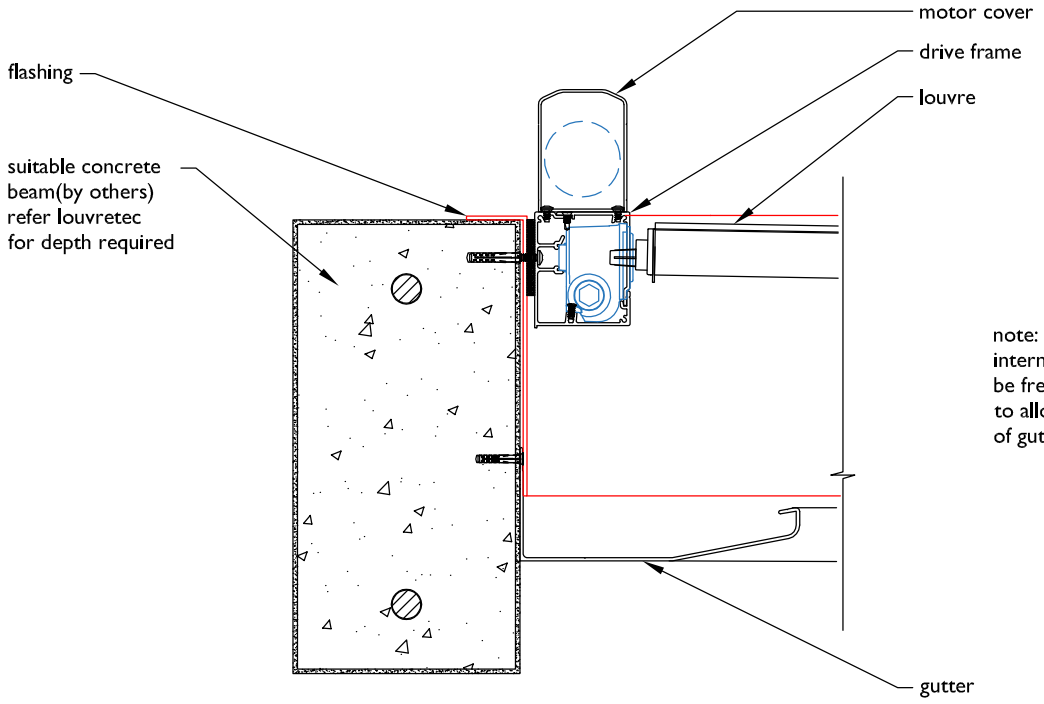


note:
internal corners of frame to be free of cleats and joiners to allow continuous fitting of gutters.



FILE: STRUCTURAL 4.34 DATE MODIFIED: 01/10/2024 SCALE:

www.louvretec.co.nz www.louvretec.com.au

©Louvretec 2025 - All Rights Reserved. Technical specifications subject to change without notice.

**NOTES**

# LIGHT-TEC LIGHTING


| | |
|---|---|
| Gallery and Overview | 7.02 - 7.05 |
| Lighting to inside face of gutter | 7.06 |
| Lighting to front face of gutter | 7.07 |
| Downlights under frames | 7.08 |
| Typical Detail gutter lighting | 7.09 |
| Typical Detail downlights | 7.10 |
| Warranty | 7.11-7.12 |


©Louvretec 2025 – All Rights Reserved. Technical specifications subject to change without notice.

*1.*



1. LOUVRETEC OUTDOOR ROOM WITH GUTTER STRIP LIGHTING

©Louvretec 2025 – All Rights Reserved. Technical specifications subject to change without notice.



2.



3.



4

2. LOUVRETEC STRIP LIGHTING 3. DOWNLIGHTS AND GUTTER LIGHTS 4. OUTDOOR ROOM ILLUMINATED

©Louvretec 2025 – All Rights Reserved. Technical specifications subject to change without notice.

# LIGHT-TEC CUSTOM RANGE OF PREMIUM OUTDOOR LIGHTING OPTIONS




All controlled by your Louvretec Remote Controller





©Louvretec 2025 – All Rights Reserved. Technical specifications subject to change without notice.



1. LIGHTING TO INSIDE FACE OF GUTTER



2. LIGHTING TO FRONT FACE OF GUTTER



3. DOWNLIGHTS IN CONDUIT



## Designed for lighting outdoor spaces:

Louvretec has developed the Light-tec custom range of premium lighting options, specifically to enhance a Louvretec Room, but equally as well suited for any Louvretec installation.

## New technology:

- Light-tec is environmentally friendly, incorporating the very latest in silicon extrusion technology
- Dot-free, flexible, ultra-thin, ultra powerful and fully dimmable, the Light-tec range has been designed to seamlessly blend into the gutter and frame extrusion.

## Three Light-tec options:

### 1. Continuous LED Pure Flow strip lighting to inside face of gutter

This popular option shines diffused light onto the underside of the louvre blade.

### 2. Continuous LED Neon strip lighting to front face of gutter

The ultra slim strip sits flush with the front face of the lighting clip providing seamless, continuous lighting to the inside of the Louvretec Room.

### 3. Underframe downlights

This option allows for lighting across the width of the Opening Roof or Outdoor Room.

## All on 1 controller:

- One controller takes care of all motorisation, lighting and heating
- Set-up by your Louvretec Dealer, very little instruction is required - simply scroll through the screen display until the graphic showing your desired option appears.
- A simple two-button operation covers all functions.

NOTE: LIGHTING OPTIONS CAN VARY BETWEEN DEALERS AND COUNTRIES. DISCUSS SPECIFIC OPTIONS WITH YOUR LOCAL LOUVRETEC DEALER.

©Louvretec 2025 – All Rights Reserved. Technical specifications subject to change without notice.



# 1. LIGHTING TO INSIDE FACE OF GUTTER

## Light-tec Gutter Lighting

Inside face gutter lighting is our most requested lighting option

Louvretec's new reversible strip gutter lighting extrusion provides a lighting option to the inside face of the gutter.

The continuous LED Pure Flow strip fits to the top inside face of the gutter, providing a warm diffused light shining directly onto the underside of the opening roof blades.

Available in Warm white, fully dimmable.





DOT FREE LINEAR FOR PERFECT COLOUR CONSISTENCY



FLEXIBLE WITH A WIDER LIGHTING AREA



INSIDE FACE LIGHT-TEC GUTTER LIGHTING



©Louvretec 2025 – All Rights Reserved. Technical specifications subject to change without notice.





# 2. LIGHTING TO FRONT FACE OF GUTTER

## Light-tec Gutter Lighting

Continuous LED Neon Strip lighting is now available fixed to the front face of the gutter.

Featuring ultra-slim uniform dot free lighting, incorporating the latest in advanced silicone technology and high weather resistance.

This option provides direct illumination into the Opening Roof or Louvretec Room, with mitre cut light corners blending seamlessly.

Available in Warm white, fully dimmable



FRONT FACE LIGHT-TEC GUTTER LIGHTING



ADVANCED PROCESS SILICONE EXTRUSION DOT-FREE TECHNOLOGY



SUPER FLEXIBLE WITH ULTRA SLIM SIZE

©Louvretec 2025 – All Rights Reserved. Technical specifications subject to change without notice.



# 3. DOWNLIGHTS IN CONDUIT

## Light-tec Downlights under frames

These beautiful compact micro downlights fit neatly within our custom two-piece Lighting conduit.

Typically the conduit fits underneath the aluminium box section frame, incorporating the lights “plug and play”wiring, which is hidden but easily accessible.

Bright enough for reading but fully dimmable.

Available in Warm white





MIRA LOW LED LIGHT



DOWNLIGHT LIGHT-TEC LIGHTING WITHIN CONDUIT
TYPICALLY FIXING TO ALUMINIUM BOX SECTION FRAME



©Louvretec 2025 – All Rights Reserved. Technical specifications subject to change without notice.



1. LIGHTING TO INSIDE FACE OF GUTTER



TYPICAL DETAIL VIEWED FROM INSIDE



2. LIGHTING TO FRONT FACE OF GUTTER



TYPICAL DETAIL MITRED CORNER


©Louvretec 2025 – All Rights Reserved. Technical specifications subject to change without notice.



3. DOWNLIGHTS IN CONDUIT



MIRA LOW LED LIGHT

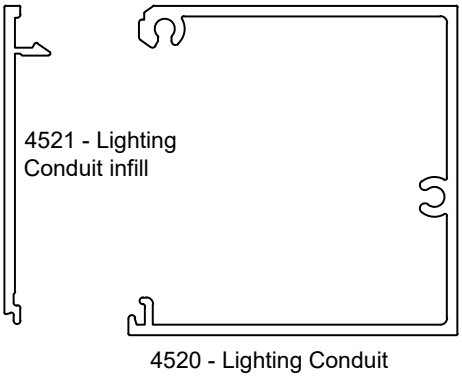


LIGHTING CONDUIT 2 PIECE EXTRUSIONS

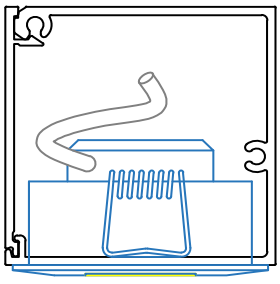

ASSEMBLED CONDUIT WITH DOWNLIGHT FITTED

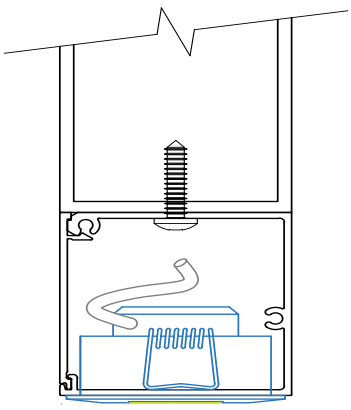

ASSEMBLED CONDUIT FIXED TO BEAM



FILE: LIGHTING 7.10
DATE MODIFIED: 01/06/2024 SCALE:
www.louvretec.co.nz www.louvretec.com.au

©Louvretec 2025 – All Rights Reserved. Technical specifications subject to change without notice.

# LOUVRETEC PRODUCT WARRANTY

BROMIC HEATING
LIGHTING

BROMIC HEATING

LIGHT-TEC LIGHTING

**The Louvretec range of products:**

All Louvretec branded products are designed and engineered in Australia & New Zealand by Louvretec to comply with relevant AS/NZS standards - refer to full Louvretec Engineering data Design Manual 2025 Section 13.

Louvretec has the most extensive range of outdoor sun shading/ outdoor living products available in Australasia, backed by a comprehensive network of Louvretec Dealers.

Most Louvretec products sold in Australia are made in Australia*

Most Louvretec products sold in New Zealand are made in New Zealand*

*Some specialised products may only be made in Australia or in NZ and are shipped between each country.









**The Authorised Louvretec Dealer Network:**

Your Louvretec product will have been supplied and installed by your local Authorised Louvretec Dealer. All Louvretec Dealerships are privately owned, and the same Louvretec Dealer who supplied your Louvretec will also service your Louvretec.

Your Louvretec product has been "Engineered for Life" and we are committed to ensuring that happens.

**Louvrecare:**

Preventative maintenance and valet. Regular scheduled servicing by a Louvrecare team has real benefits. Louvrecare can vary between Dealerships - consult your local Louvretec Dealer.

LouvreCare
PREVENTATIVE MAINTENANCE & VALET

*Engineered for Life*

LouvreTec
OPENING & RETRACT ROOFS / SUN LOUVRES / SHUTTERS

©Louvretec 2025 – All Rights Reserved. Technical specifications subject to change without notice.

# LOUVRETEC PRODUCT WARRANTY

BROMIC HEATING

LIGHTING

BROMIC HEATING

LIGHT-TEC LIGHTING

| PRODUCTS | IDENTIFICATION | WARRANTY |
|---|---|---|
| PLATINUM SMART HEAT ELECTRIC |  | 3 YEARS REPLACEMENT |
| PLATINUM SMART HEAT ELECTRIC MARINE |  | 3 YEAR REPLACEMENT |
| ECLIPSE SMART HEAT ELECTRIC |  | 3 YEARS REPLACEMENT |

| PRODUCTS | IDENTIFICATION | WARRANTY |
|---|---|---|
| LED PURE FLOW STRIP LIGHTING |  | 2 YEARS REPLACEMENT |
| LED NEON STRIP LIGHTING |  | 2 YEAR PARTS |
| UNDERFRAME DOWNLIGHTS |  | 2 YEARS REPLACEMENT |

SERVICE AND LABOUR RESPONSIBILITY

UNDER THIS LIMITED WARRANTY, THE WARRANTOR WILL PROVIDE ONLY A REPLACEMENT HEATER OR LIGHTING OR PART THEREOF. THE OWNER IS RESPONSIBLE FOR ALL OTHER COSTS.

SUCH COSTS MAY INCLUDE, BUT ARE NOT LIMITED TO:

- LABOUR CHARGES FOR SERVICE, REMOVAL, OR RE-INSTALLATION OF THE HEATER OR LIGHTING OR PART THEREOF.

- SHIPPING AND DELIVERY CHARGES FOR FORWARDING THE NEW HEATER, LIGHTING OR REPLACEMENT PART FROM THE NEAREST DISTRIBUTOR AND RETURNING THE CLAIMED DEFECTIVE HEATER, LIGHTING OR PART TO SUCH DISTRIBUTOR.

- ALL COST NECESSARY OR INCIDENTAL FOR HANDLING AND ADMINISTRATIVE CHARGES AND FOR ANY MATERIALS AND/OR PERMITS REQUIRED FOR INSTALLATION OF THE REPLACEMENT HEATER OR LIGHTING OR PART.

***WARRANTY SPECIFIC INFO:***

Warranty effective from _____/_____/_____

Louvretec Representative _____

Site Adddress _____

Product Description_____

LOUVRETEC NZ LTD

Head office: 23c Douglas Alexander Parade, Albany 0632, Auckland New Zealand

T +64 9 415 4949

E info@louvretec.co.nz

www.louvretec.com



# HEATING


| | |
|---|---|
| Overview | 8.02 - 8.05 |
| Bromic Platinum Smart Heat Electric | 8.06 |
| Bromic Platinum Smart Heat Electric Marine | 8.07 - 8.08 |
| Eclipse Smart Heat Electric | 8.09 |
| Heating output and controllers | 8.10 - 8.11 |
| Mounting and Installation Options | 8.12 - 8.14 |
| Warranty Information | 8.15 - 8.16 |


©Louvretec 2025 – All Rights Reserved. Technical specifications subject to change without notice.



*EXTEND YOUR COMFORT OUTDOORS WITH THE SUPERIOR HEAT AND AWARD WINNING  DESIGN OF OUR SMART HEAT OUTDOOR HEATERS*



©Louvretec 2025 – All Rights Reserved. Technical specifications subject to change without notice.


1.


2.


3.


4.

1. PLATINUM SMART-HEAT ELECTRIC MARINE IN WHITE 2. ECLIPSE SMART-HEAT ELECTRIC IN BLACK 3. PLATINUM SMART-HEAT ELECTRIC MARINE 4. PLATINUM SMART-HEAT ELECTRIC

©Louvretec 2025 – All Rights Reserved. Technical specifications subject to change without notice.



5.


6.



7.



8.

5. PLATINUM SMART-HEAT ELECTRIC HEATER 6. PLATINUM SMART-HEAT ELECTRIC - RECESSED 7. ALFRESCO DINING 8. PLATINUM SMART-HEAT ELECTRIC - CEILING MOUNTED



©Louvretec 2025 – All Rights Reserved. Technical specifications subject to change without notice.



# LOUVRETEC HEATING

## BROMIC HEATING - supplied by Louvretec

Sleek, Seamless, Modern. Introducing the Bromic range of Outdoor Heaters. Make the most of your outdoor spaces all year long.

## Designed for heating outdoor spaces

- Most Louvretec Dealers offer a suitable outdoor heater option. This can vary between Dealers.
- Louvretec recommends and distributes throughout NZ the Bromic range of Outdoor Heaters
- Manufactured in Italy, Bromic Heaters are also available throughout our Australian Dealer network
- They are a stylish, effective and functional addition to a Louvretec Outdoor Room.

## Bromic Heaters

- Award winning design made of high quality stainless steel
- Superior technology allowing the heater to spread radiant heat evenly across a large area creating ideal comfort
- With a wide range of sizes available, find the ideal heater to suit your outdoor space
- Black and white colours available
- With a wide array of mounting options, Bromic offers solutions to compliment any decor and provide functionality for ambiance and comfort.

## Bromic's free complimentary design service

- Bromic offers a full design service, covering floor plans, layout and environment, heater selection and installation requirements.
- Contact your Louvretec Dealer for further information.



Up to two heaters can operate via Louvretec's hand held controller or wall mounted wireless remote switches.

©Louvretec 2025 – All Rights Reserved. Technical specifications subject to change without notice.

BROMIC HEATING

## PLATINUM SMART-HEAT ELECTRIC

- Available in black and white, Platinum Smart Heat Electric heaters are an ideal option to consider when heating under a Louvretec Opening Roof or full Louvretec outdoor room.
- These slim-line stainless steel units spread warmth and comfort evenly, and are installed to blend seamlessly into the background.




2300W; 3400W & 4500W SERIES WHITE




2300W; 3400W & 4500W SERIES BLACK

## PLATINUM SMART-HEAT™ ELECTRIC



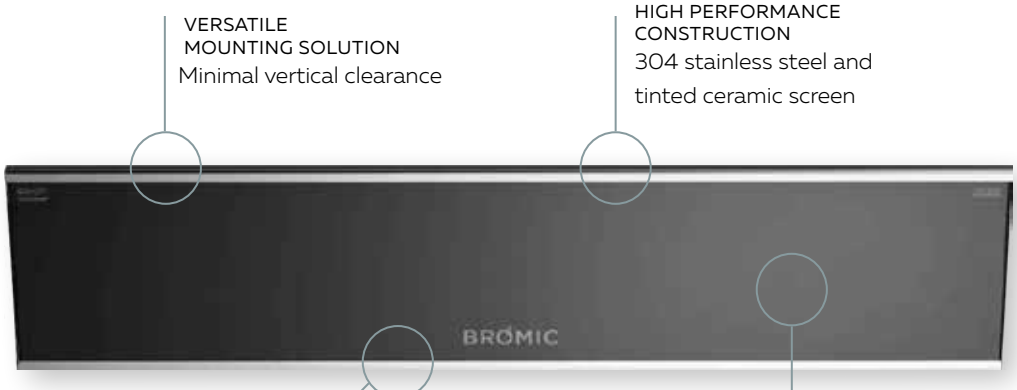


VERSATILE MOUNTING SOLUTION
Minimal vertical clearance

HIGH PERFORMANCE CONSTRUCTION
304 stainless steel and tinted ceramic screen

CLEAN, COMPACT AND ELEGANT DESIGN
For seamless integration

ADJUSTABLE MOUNTING BRACKETS
Allows for directional heat distribution

COMPATIBLE WITH SMART-WIRELESS TECHNOLOGY



©Louvretec 2025 – All Rights Reserved. Technical specifications subject to change without notice.

# PLATINUM SMART-HEAT™ ELECTRIC MARINE



## PLATINUM SMART-HEAT ELECTRIC MARINE

· Made in high-quality AIS316-grade stainless steel, Platinum Smart-Heat Marine heaters provide superior resistance in marine or coastal environments.

· Available in black or white finish this exceptional heater is backed by an industry leading 5-year warranty.



2300W; 3400W & 4500W SERIES WHITE



2300W; 3400W & 4500W SERIES BLACK




VERSATILE MOUNTING SOLUTION
Ability to wall-mount, ceiling-mount, or recess using either the Standard or Low Clearance Recess Kit

HIGH PERFORMANCE STAINLESS-STEEL CONSTRUCTION
Premium 316 grade stainless steel suitable for marine and coastal environment

CLEAN, COMPACT AND ELEGANT DESIGN
Minimized light emissions and easy to clean in a black or white finish

DURABILITY YOU CAN TRUST
Backed by an industry-leading 5-year warranty

SEALED ELEMENT
Sealed compartment with thin film elements to prevent corrosion

COMPATIBLE WITH SMART-WIRELESS TECHNOLOGY

©Louvretec 2025 – All Rights Reserved. Technical specifications subject to change without notice.

BROMIC HEATING

## PLATINUM SMART-HEAT ELECTRIC MARINE

**Why Platinum Marine**

· To counteract the hurdles of installing an outdoor heater near the coast where standard stainless steel can "tea-stain"and deteriorate, Bromic engineered the Platinum Electric Marine grade heater series.

**AISI 316 Marine-Grade Stainless Steel**

· Built to withstand corrosive environments with high grade materials and a fully enclosed heater body to protect internal elements.

**Industry-Leading 5-Year Warranty**

· Offering peace of mind that the heater is built to last

**Versatile Mounting Options**

· Wall, ceiling and recessed mounting options

**Convenient Control Options**

· The controller that operates your Louvretec Opening or Retracting Roof also operates your heater

## WHAT ARE CORROSIVE ELEMENTS

The high level of relative humidity in coastal areas can add to the deterioration of metals, accelerating the electrochemical reactions that cause rusting and other forms of corrosion.

Some of the major threats include those made primarily of sodium chloride such as salt spray from breaking waves and onshore winds, or other atmospheric pollutants like sulfur dioxide within fog, mist and dew.








©Louvretec 2025 – All Rights Reserved. Technical specifications subject to change without notice.

# ECLIPSE SMART-HEAT™ ELECTRIC



## ECLIPSE SMART-HEAT ELECTRIC

· Dim the lights and turn up the heat with the new Eclipse Smart-Heat Electric heater

· Ideal for mid-beam mounting, the Eclipse series adds style, warmth and light to your Louvretec Outdoor space.



3000W ECLIPSE SERIES BLACK

COMPATIBLE WITH SMART-WIRELESS TECHNOLOGY

FLEXIBLE MOUNTING OPTIONS
Minimal vertical clearance requirements and a wide range of wall, ceiling and free-standing options to suit any space

UNIQUE DESIGN
Elegantly understated design that compliments any design-focused outdoor environment

PREMIUM CONSTRUCTION
Superior components ensuring longevity of use and aesthetic appeal for years to come

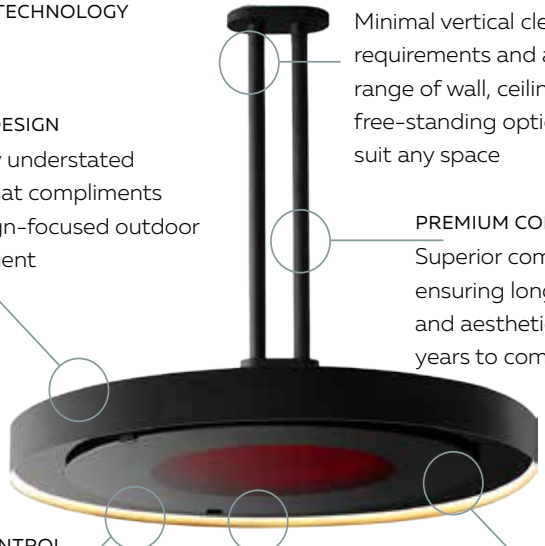

PRECISE CONTROL
Accurately adjust the heat output 0/30/60/100 % for complete control over the level of comfort

DIMMABLE LIGHT
Complete flexibililty over lecel of brightness for the right amount of ambience

CERAMIC SCREEN
Spreads heat evenly across any area while minimising light emissions from the heating element

## HEAT AREAS

**3000W SERIES**
HEATING APPROXIMATELY 11M2. 3000W HEATING POWER

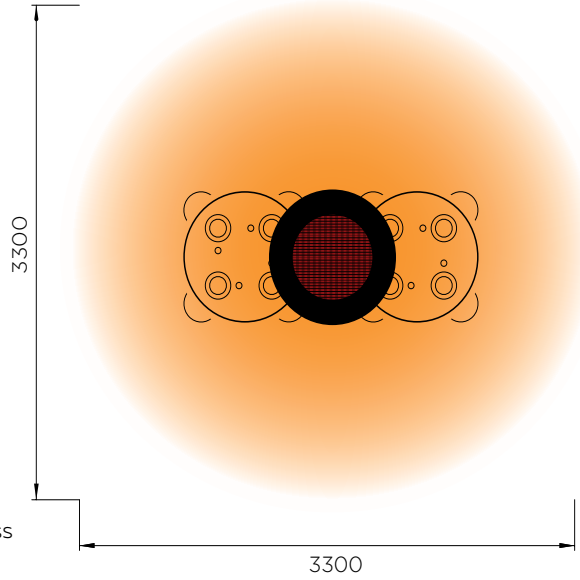


©Louvretec 2025 – All Rights Reserved. Technical specifications subject to change without notice.

BROMIC HEATING

# PLATINUM SMART-HEAT & PLATINUM SMART-HEAT ELECTRIC MARINE



**Extend the outdoor experience:**
A well designed outdoor heating solution will extend the year-round use of your Louvretec outdoor space by adding warmth and comfort. The use of outdoor heaters are a great aid in keeping your outdoor space usable all year long. Bromic heaters supplied by Louvretec will maximise the use in both residential and commercial outdoor spaces

**Understanding the challenges:**
· An outdoor area is not a confined space - forced air systems are not effective in controlling ambient air temperature.
· In an outdoor environment hot air rises and quickly dissipates.
· A breeze diminishes the effect of a forced air system, making it unsuitable to use effectively for outdoor spaces.

**The solution:**
· The only way to heat an outdoor area is through radiant heat.
· Radiant heat warms objects, not in air in the way similar to the sun warming your skin.
· Radiant heaters are wind resistant and can still warm people even in mild wind conditions.
· This method involves projecting radiant heat onto people rather than moving warm air into the outdoor space
· Radiant heating is the foundation for all Bromic heaters - heating outdoor spaces effectively.




©Louvretec 2025 – All Rights Reserved. Technical specifications subject to change without notice.

## CHOOSE WHICH HEATER FOR YOUR APPLICATION:

Note: An outdoor area is defined as being at least 30% open (front, back, wall or sides.)

If these areas under an Opening Roof are closed in with Shutters, Outdoor Blinds or Slidetec Frameless Sliding Glass Panels, then more heat will be captured, creating a convectional heating affect.

## TYPICAL HEATER OUTPUT:

2300W Series
Heating approximately 6m2

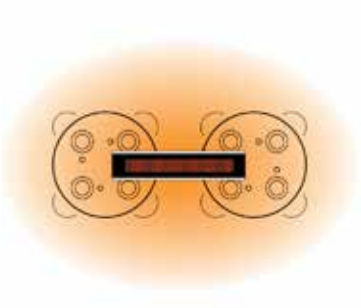

3400W Series
Heating approximately 10m2

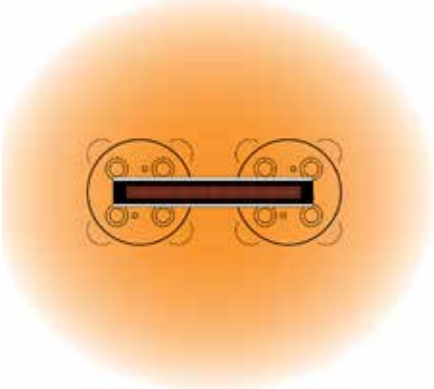

4500W Series
Heating approximately 13m2

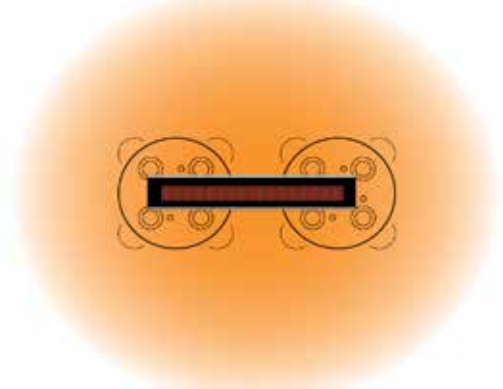

**2300W Dimensions:**

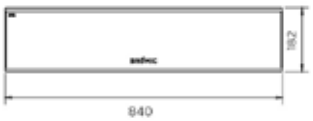


**3400W Dimensions:**




**4500W Dimensions:**




## CONTROLLER AND ACCESSORIES: REMOTE OPTIONS

Hand Held
Remote Control



Wall Mounted
1 Heater
Remote Control



Wall Mounted
2 Heater
Remote Control



STANDARD

On/Off Controller operates up to two heaters, with individual controls for each heater



**Features:**
Individual control of each heater
Controls both 2400W and 3000W heaters
Dimensions 145w x 210h x 80d
Must be installed in a dry, shaded area eg under an eave

DIMMER OPTION

A Dimmer Controller is available. This controls both heaters at the same time (ie, there is no individual control of each heater).



**Features:**
Dimmer function
Controls both heaters at the same time (ie no individual control)
Controls both 2300W and 3000W heaters
Dimmer dimensions 200w x 230h x 80d
Must be installed in a dry, shaded, well ventilated area
Must be installed upright ie heat sink at the top

FOR WIRING DETAILS
REFER TO SECTION 14


©Louvretec 2025 – All Rights Reserved. Technical specifications subject to change without notice.

MOUNTING OPTIONS:

· How your heater is mounted is as critical to the aesthetic design as it is to the functional output of the heater.

· Typically under a Louvretec Opening Roof the heater will be mounted to the underside of a structural beam.

· Where appropriate, the heater can also be mounted to the wall of the structure to which the Opening Roof is attached.

· Louvretec has custom brackets that also include a wiring conduit for under-beam mounting.

· Discuss with Louvretec which option is best suited for your installation.

· Discuss with Louvretec and your electrician the electrical feed requirements.



Wall mounted

STANDARD HEATER FIXING DETAILS

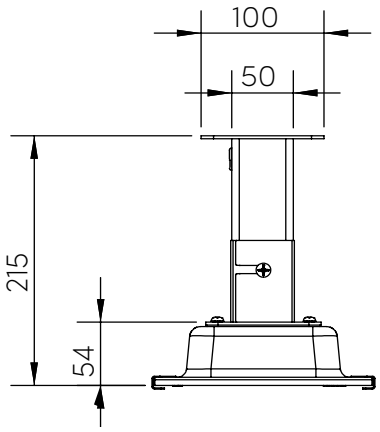


Beam on ceiling bracket

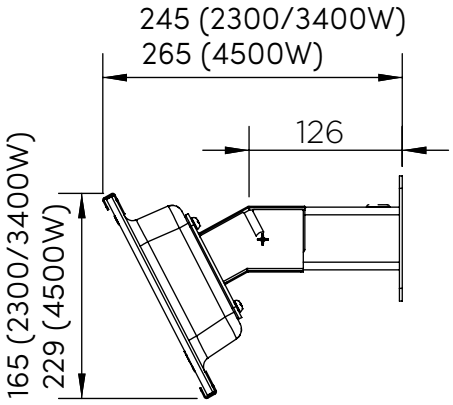


Wall bracket

VERTICAL HEATER

HORIZONTAL HEATER



FILE: HEATING 8.12 DATE MODIFIED: 01/06/2024 SCALE:

www.louvretec.co.nz www.louvretec.com.au

©Louvretec 2025 - All Rights Reserved. Technical specifications subject to change without notice.

## HEATER BRACKET FITTING UNDER OPENING ROOF – NO WALL BEHIND

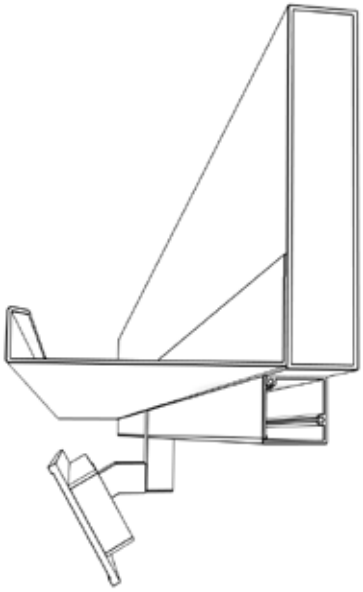

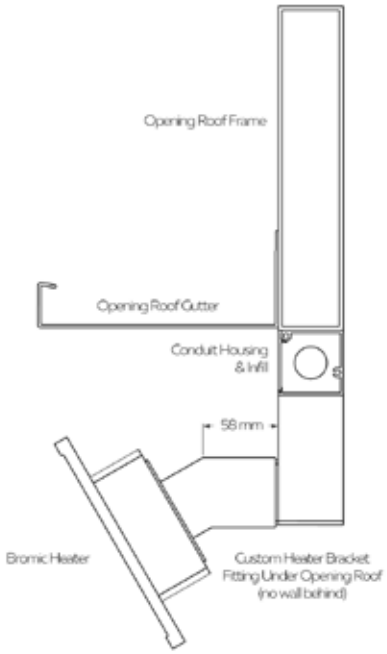


## HEATER BRACKET FITTING UNDER OPENING ROOF – WALL BEHIND

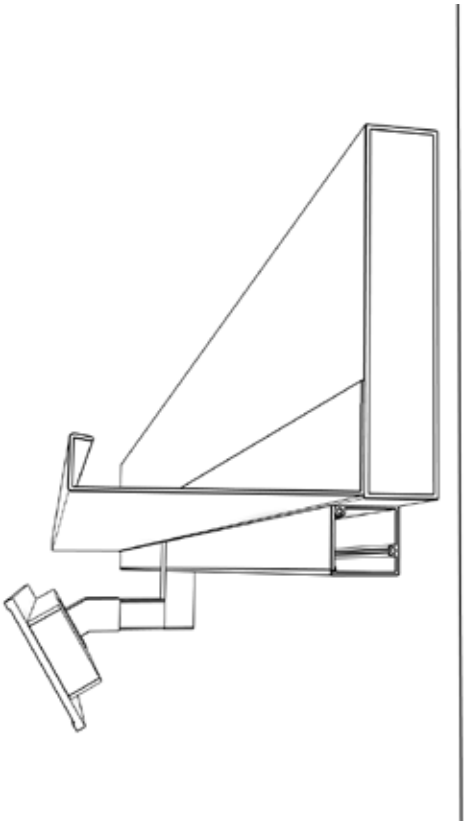

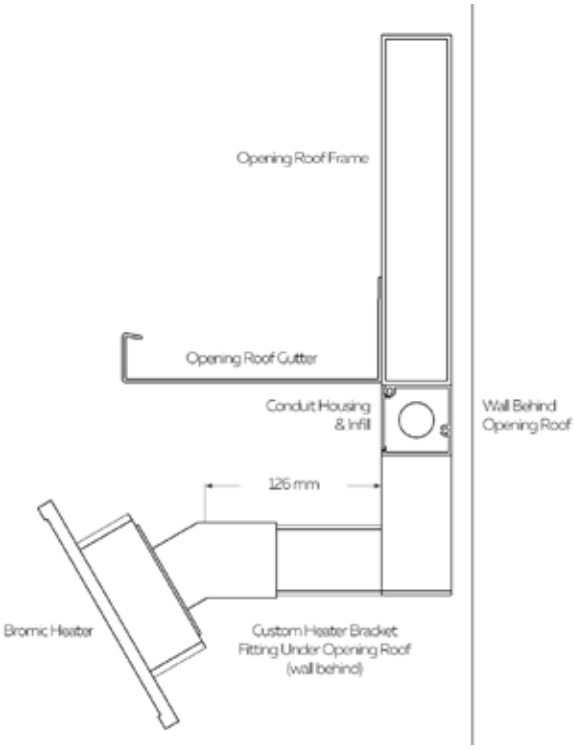



©Louvretec 2025 – All Rights Reserved. Technical specifications subject to change without notice.

HEATER BRACKET FITTING UNDER OPENING ROOF AND PROJECTING BEYOND GUTTER EXTRUSION
THIS ALLOWS CLEARANCE FOR FIXING UP TO 3 OFF BOTTOM ROLLING SLIDETEC OR LOUVRED SHUTTERS

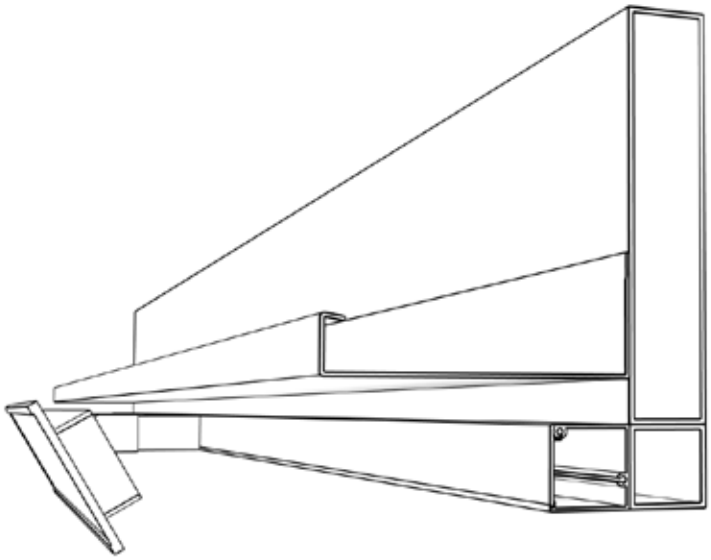

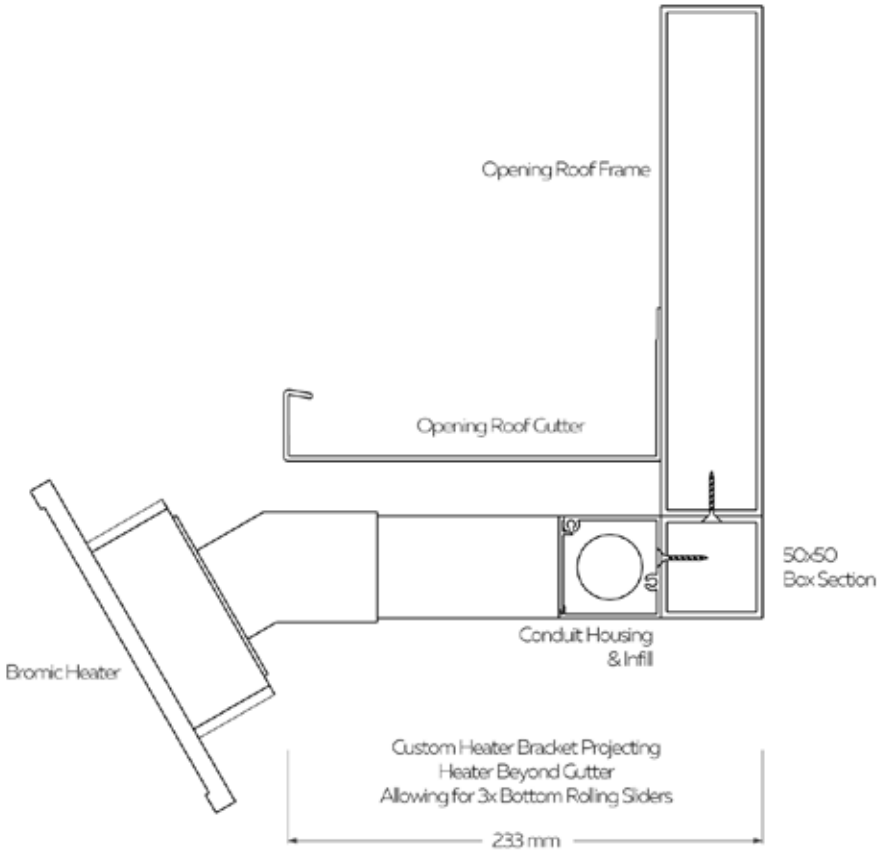



©Louvretec 2025 – All Rights Reserved. Technical specifications subject to change without notice.

# LOUVRETEC PRODUCT WARRANTY

BROMIC HEATING
LIGHTING

BROMIC HEATING

LIGHT-TEC LIGHTING

**The Louvretec range of products:**

All Louvretec branded products are designed and engineered in Australia & New Zealand by Louvretec to comply with relevant AS/NZS standards - refer to full Louvretec Engineering data Design Manual 2025 Section 13.

Louvretec has the most extensive range of outdoor sun shading/ outdoor living products available in Australasia, backed by a comprehensive network of Louvretec Dealers.

Most Louvretec products sold in Australia are made in Australia*

Most Louvretec products sold in New Zealand are made in New Zealand*

*Some specialised products may only be made in Australia or in NZ and are shipped between each country.









**The Authorised Louvretec Dealer Network:**

Your Louvretec product will have been supplied and installed by your local Authorised Louvretec Dealer. All Louvretec Dealerships are privately owned, and the same Louvretec Dealer who supplied your Louvretec will also service your Louvretec.

Your Louvretec product has been "Engineered for Life" and we are committed to ensuring that happens.

**Louvrecare:**

Preventative maintenance and valet. Regular scheduled servicing by a Louvrecare team has real benefits. Louvrecare can vary between Dealerships - consult your local Louvretec Dealer.

LouvreCare
PREVENTATIVE MAINTENANCE & VALET

*Engineered for Life*

LouvreTec
OPENING & RETRACT ROOFS / SUN LOUVRES / SHUTTERS

©Louvretec 2025 – All Rights Reserved. Technical specifications subject to change without notice.

# LOUVRETEC PRODUCT WARRANTY

BROMIC HEATING

LIGHTING

LIGHT-TEC LIGHTING

| PRODUCTS | IDENTIFICATION | WARRANTY |
|---|---|---|
| PLATINUM SMART HEAT ELECTRIC |  | 3 YEARS REPLACEMENT |
| PLATINUM SMART HEAT ELECTRIC MARINE |  | 3 YEAR REPLACEMENT |
| ECLIPSE SMART HEAT ELECTRIC |  | 3 YEARS REPLACEMENT |

| PRODUCTS | IDENTIFICATION | WARRANTY |
|---|---|---|
| LED PURE FLOW STRIP LIGHTING |  | 2 YEARS REPLACEMENT |
| LED NEON STRIP LIGHTING |  | 2 YEAR PARTS |
| UNDERFRAME DOWNLIGHTS |  | 2 YEARS REPLACEMENT |

SERVICE AND LABOUR RESPONSIBILITY

UNDER THIS LIMITED WARRANTY, THE WARRANTOR WILL PROVIDE ONLY A REPLACEMENT HEATER OR LIGHTING OR PART THEREOF. THE OWNER IS RESPONSIBLE FOR ALL OTHER COSTS.

SUCH COSTS MAY INCLUDE, BUT ARE NOT LIMITED TO:

- LABOUR CHARGES FOR SERVICE, REMOVAL, OR RE-INSTALLATION OF THE HEATER OR LIGHTING OR PART THEREOF.

- SHIPPING AND DELIVERY CHARGES FOR FORWARDING THE NEW HEATER, LIGHTING OR REPLACEMENT PART FROM THE NEAREST DISTRIBUTOR AND RETURNING THE CLAIMED DEFECTIVE HEATER, LIGHTING OR PART TO SUCH DISTRIBUTOR.

- ALL COST NECESSARY OR INCIDENTAL FOR HANDLING AND ADMINISTRATIVE CHARGES AND FOR ANY MATERIALS AND/OR PERMITS REQUIRED FOR INSTALLATION OF THE REPLACEMENT HEATER OR LIGHTING OR PART.

***WARRANTY SPECIFIC INFO:***

Warranty effective from _____/_____/_____

Louvretec Representative _____

Site Adddress _____

Product Description_____

LOUVRETEC NZ LTD

Head office: 23c Douglas Alexander Parade, Albany 0632, Auckland New Zealand

T +64 9 415 4949

E info@louvretec.co.nz

**www.louvretec.com**



slidetec
By Louvretec


| | |
|---|---|
| Gallery and Overview | 5.02 - 5.06 |
| Slidetec ST10 & ST12 Glass Doors & Windows | 5.07 |
| Configurations | 5.08 - 5.09 |
| 3-Panel Sliders Technical info | 5.10 - 5.12 |
| 4-Panel Sliders Technical info | 5.13 - 5.15 |
| 5-Panel Sliders Technical info | 5.16 - 5.18 |
| Extrusions | 5.19 - 5.20 |
| Components | 5.21 |
| Footlock | 5.22 |
| Wind loads & deflections | 5.23 |
| Glass spans | 5.24 - 5.26 |
| PS1 - Design | 5.27 - 5.30 |
| Slidetec Fixed Glazing Panels Overview | 5.31 |
| Overhead Rectangular Raking Panel | 5.32 |
| Flush Fit Fixed Panel | 5.33 - 5.35 |
| Face Fixed Panel | 5.36 - 5.40 |
| Product Warranty | 5.41 - 5.42 |


©Louvretec 2025 – All Rights Reserved. Technical specifications subject to change without notice.





©Louvretec 2025 – All Rights Reserved. Technical specifications subject to change without notice.

# SLIDETEC FRAMELESS GLASS SLIDING DOORS

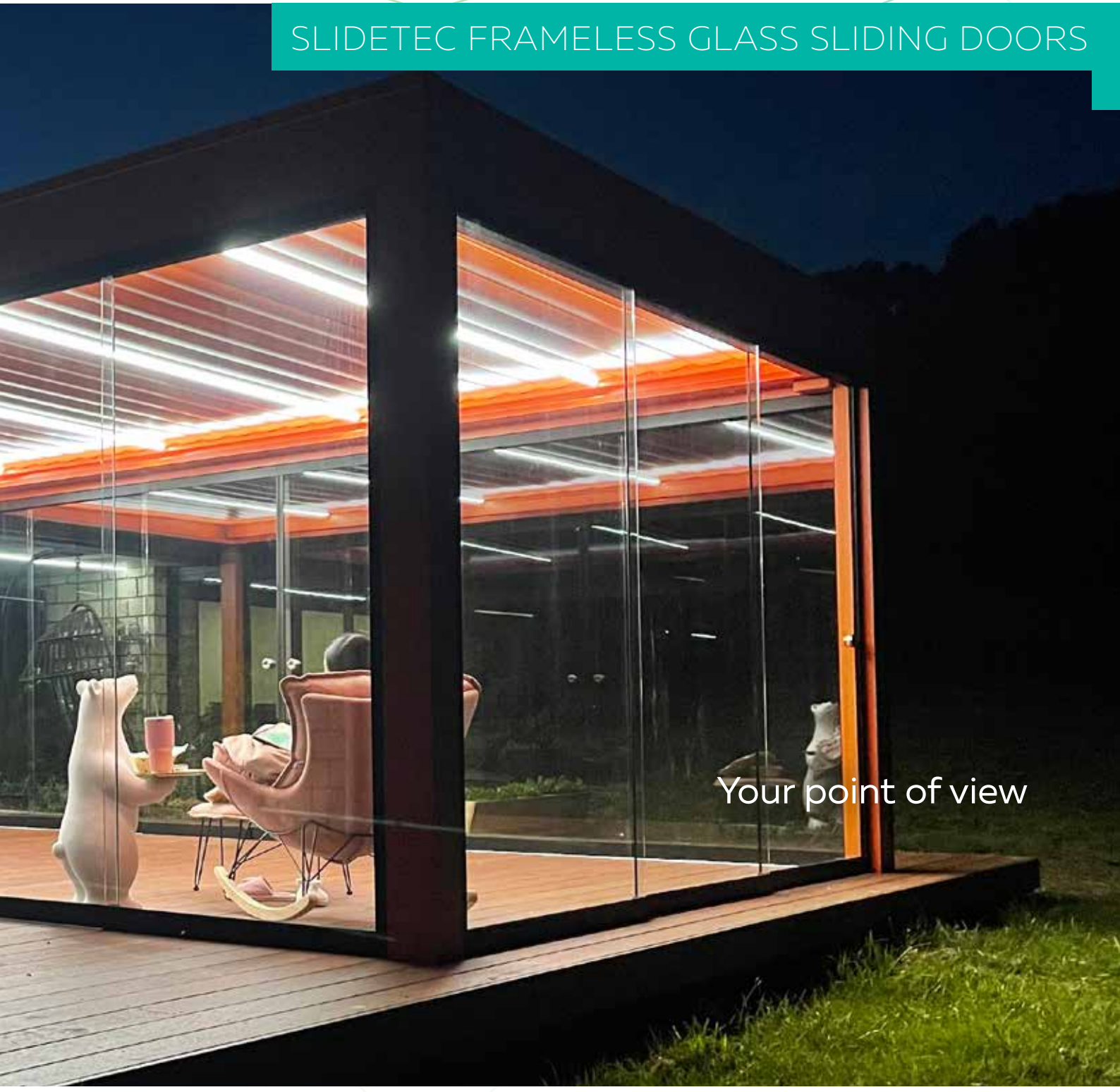


©Louvretec 2025 – All Rights Reserved. Technical specifications subject to change without notice.

# SLIDETEC GALLERY


1.


2.


3.


4.

1. SLIDETEC FRAMELESS GLASS DOORS OPENED 2. SLIDETEC FRAMELESS GLASS DOORS CLOSING IN THE SIDES OF OUTDOOR ROOMS AT A RETIREMENT VILLAGE
3. SLIDETEC FRAMELESS GLASS DOORS OPENED 4. CREATE A CONNECTION


©Louvretec 2025 – All Rights Reserved. Technical specifications subject to change without notice.



*5.*



*6.*



*7.*



*8.*

5. SLIDETEC FRAMELESS GLASS DOORS CLOSING 6. SLIDETEC FRAMELESS GLASS DOORS & FIXED RAKING PANEL 7. SLIDETEC HANDLE

8. SLIDETEC FRAMELESS GLASS CREATING AN OUTDOOR ROOM

©Louvretec 2025 – All Rights Reserved. Technical specifications subject to change without notice.

# SLIDETEC GLASS DOORS & WINDOWS & FIXED PANELS

## A freshly designed range of engineered sliding & fixed glazed options.

Slidetec Frameless Glass Sliding Doors & Windows, along with Slidetec Fixed Glazing Panels offer a freshly designed range of engineered sliding and fixed glazed options.

Specifically designed for the closing in of outdoor spaces. Ideal as sliding wall infills for your Louvretec room, or simply for closing off any outdoor deck space.

### 1. Slidetec ST10 & ST12 Frameless Glass Sliding Doors

Available in 10mm & 12mm toughened glass Slidetec has been designed to meet the rigors and demands of Australian and New Zealand climatic conditions.

The sliding systems have been considerably upgraded to meet these demands, with new extrusions, and heavy duty adjustable stainless-steel ball bearing mounted sliding carriages.

Simple, clean functional lines offering clear view and wonderful protection from the elements.

### 2. Slidetec Glazed Fixed Panels

Available in 6mm or 8mm toughened glass, Slidetec fixed panels are designed to complement and enhance the Slidetec sliding door range.

Ideal as overhead fixed panels if overall height exceeds sliding door design specifications.

Can also be used as conventional glazed fixed panels if sliding access is not required.

### Enhance your outdoor space

Enhance and enjoy your outdoor spaces protected from the weather without compromising your view.

Close up snug for wet days, open wide for cooling breezes. Enjoy the best of whatever the weather has on offer.



SLIDETEC FRAMELESS GLASS SLIDING DOORS



SLIDETEC FRAMELESS GLASS SLIDING SHUTTERS



SLIDETEC GLAZED FIXED PANEL



©Louvretec 2025 – All Rights Reserved. Technical specifications subject to change without notice.



SLIDETEC FRAMELESS GLASS SLIDING DOORS BRINGING POOLSIDE COMFORT



SLIDETEC 3 PANEL FRAMELESS GLASS SLIDING DOOR

# 1. SLIDETEC ST10 & ST12 FRAMELESS GLASS SLIDING DOORS & WINDOWS

## Close in the sides of an outdoor area

Slidetec Frameless Glass Sliding systems have been specifically designed for the closing in of outdoor areas.

The frameless design ensures maximum view with clean, uninterrupted lines. Designs such as these are only suitable for closing in outdoor areas and can not be used as house joinery.

## Key features

- A wide range of panel configurations. Refer to page 5.09
- Floor mounted sliding system
- Standard and rebated bottom track options available.
- Has 3, 4 or 5 track sliding options giving a range of panel choices
- Slides to the left or right as desired
- System is easy to use, with pick up blocks to ensure easy following function when closing the panels
- Stainless steel pull handle rebated into glass standard
- Optional locking with easy to use Foot Lock
- Glazing with 10mm or 12mm toughened glass
- Silver anodised bottom rail to enhance smooth gliding function of stainless steel bearing bottom rollers
- Powder coat finish of your choice

©Louvretec 2025 – All Rights Reserved. Technical specifications subject to change without notice.

# DIFFERENT CONFIGURATIONS & COMBINATIONS

## Slidetec systems are extremely versatile

While appearing both simple and minimal in design, Slidetec has been designed to meet a wide range of varied applications.

Please familiarise yourself with the design options and combinations available.

### Standard panels

- Panels range in sets from 2 glass panels to 10 glass panels
- Panels sliding in one direction are the most typically specified
- Panels may also meet-in-the-middle (MIM), installation details being the same for both options

### Tracks

- Track options vary between 3 track, 4 track and 5 track
- Tracks are available standard, flush or recessed

### Glass options

- Sliding doors and windows are available in 10mm & 12mm toughened glass, determined by wind and glass size
- Fixed Panels are available in 6mm & 8mm toughened glass

### Locking

- Doors are easily locked from the inside with Louvretec's new Foot Lock
- This is an options, please specify if required
- A 58mm round stainless steel door pull is standard

### Full installation details

- A fully illustrated step by step Slidetec Installation Manual is available.



SLIDETEC 5 PANEL TRACK



10MM OR 12MM TOUGHENED GLASS



FOOT LOCK



©Louvretec 2025 – All Rights Reserved. Technical specifications subject to change without notice.

NOTE: TYPICAL STANDARD CONFIGURATIONS ARE SHOWN. CONTACT LOUVRETEC FOR CUSTOM VARIATIONS. PLEASE INDICATE WHEN MEASURING IF VIEWED FROM OUTSIDE OR INSIDE.

NOTE: WHEN INDICATION INCLUSION OF FOOTLOCK PLEASE SHOW AS DRAWN FROM INSIDE.

2 PANEL: USE 3 TRACK

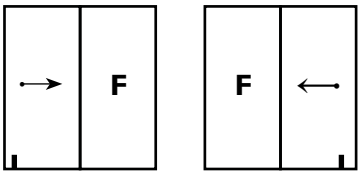


LH SLIDING RH SLIDING

3 PANEL: USE 3 TRACK

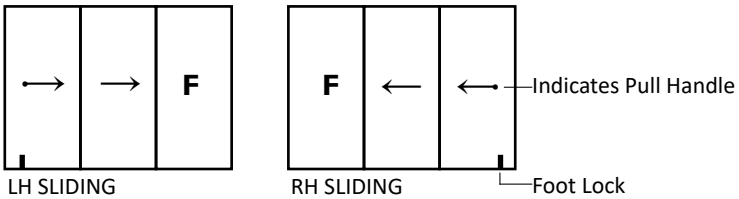


LH SLIDING RH SLIDING

4 PANEL: USE 4 TRACK

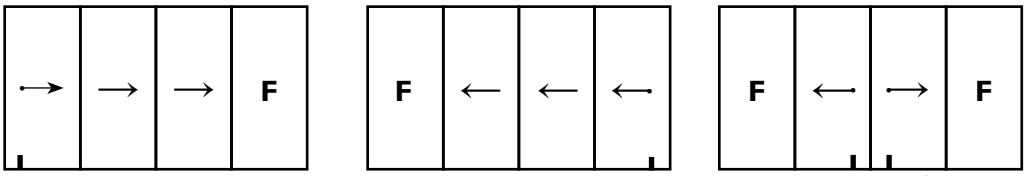


LH SLIDING RH SLIDING CENTRE SLIDING LH & RH

5 PANEL: USE 5 TRACK

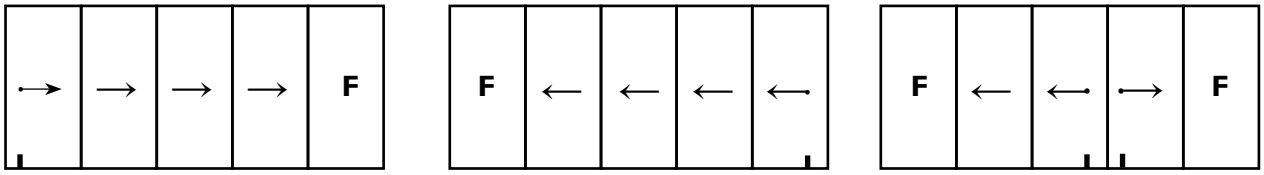


LH SLIDING RH SLIDING CENTRE SLIDING 2 LH, 1 RH AS SHOWN OR REVERSE (1 LH, 2 RH)

6 PANEL: USE 3 TRACK

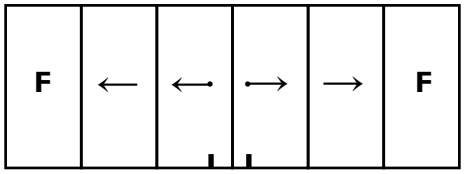


CENTRE PANELS LH & RH SLIDING

7 PANEL: USE 4 TRACK

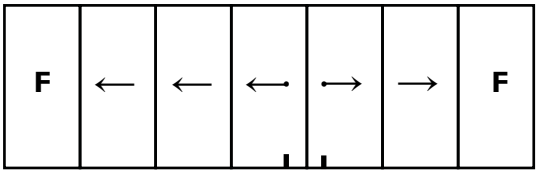


CENTRE SLIDING 3 LH, 2 RH AS SHOWN OR REVERSE (2 LH, 3 RH)

8 PANEL: USE 4 TRACK

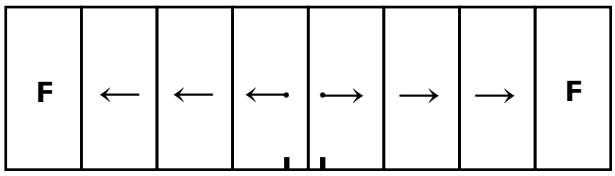


CENTRE PANELS LH & RH SLIDING

10 PANEL: USE 5 TRACK

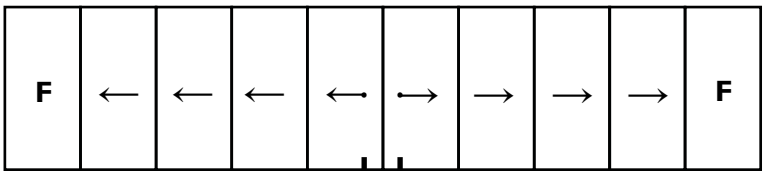


CENTRE PANELS LH & RH SLIDING

TYPICAL STANDARD CONFIGURATIONS ARE SHOWN. CONTACT LOUVRETEC FOR CUSTOM VARIATIONS


©Louvretec 2025 – All Rights Reserved. Technical specifications subject to change without notice.

**TYPICAL DETAIL:**
**3 PANEL HEAD AND STANDARD TRACK CROSS SECTIONS**





STANDARD 3 PANEL

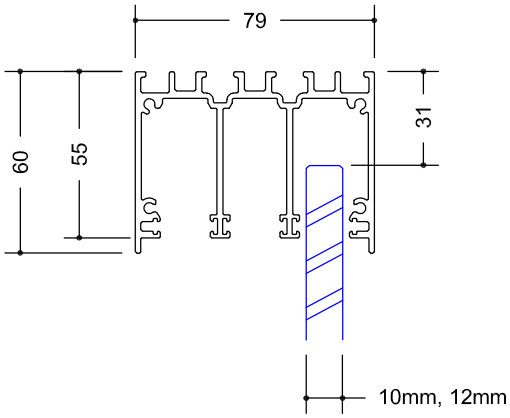


3 PANEL HEAD GUIDE

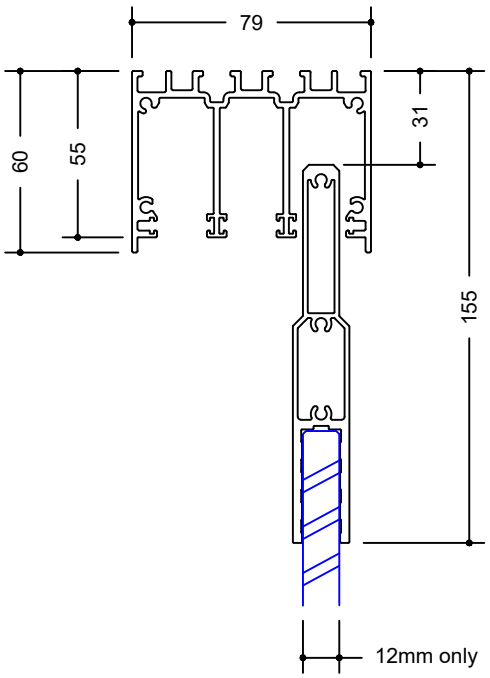


3 PANEL HEAD GUIDE WITH GLASS EXTENDER

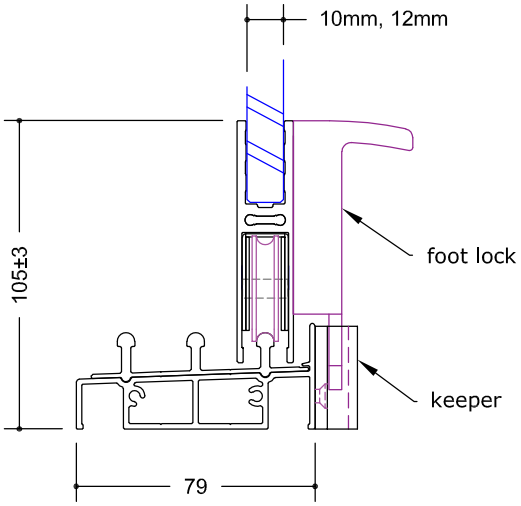


3 PANEL STANDARD TRACK & BASE

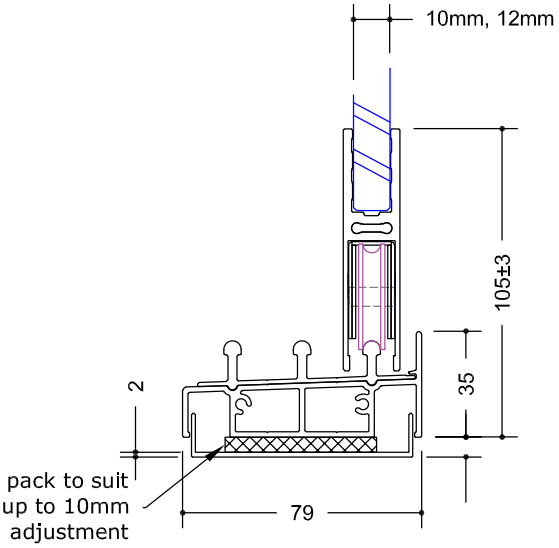


3 PANEL STANDARD TRACK & BASE WITH THREE TRACK ADAPTER CHANNEL



FILE: RETRACT 5.10 DATE MODIFIED: 01/10/2024 SCALE:

www.louvretec.co.nz www.louvretec.com.au

©Louvretec 2025 – All Rights Reserved. Technical specifications subject to change without notice.

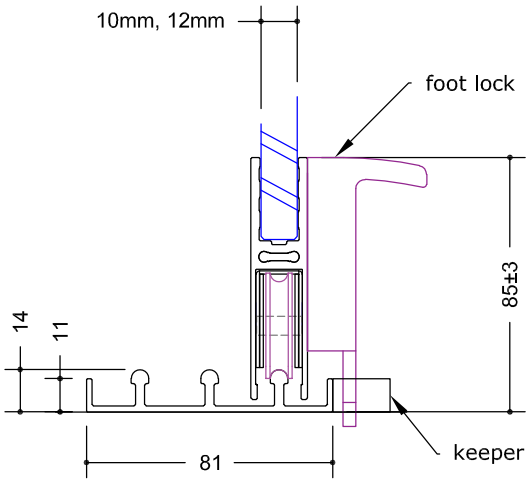


FLUSH TRACK

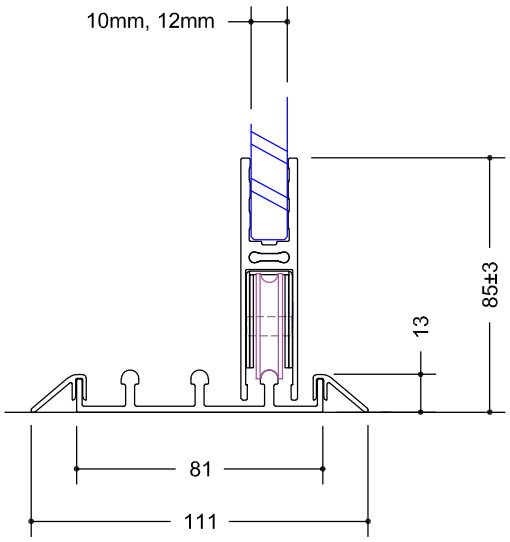


FLUSH TRACK WITH 45° CLIP-ONS

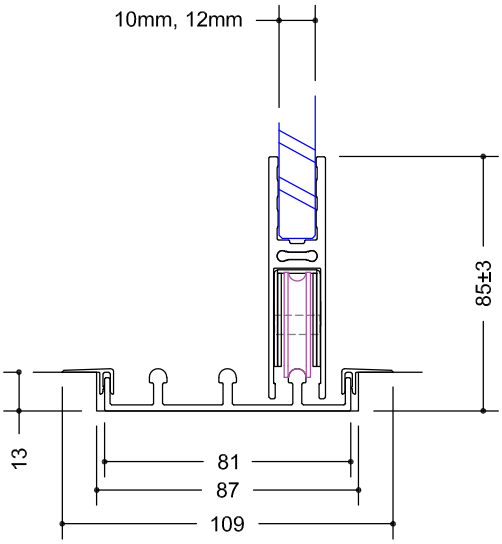


FLUSH TRACK WITH 90° CLIP-ONS

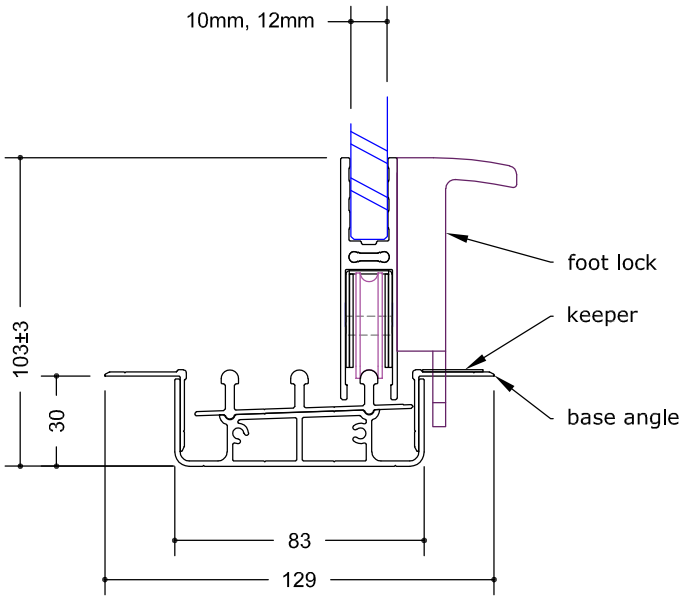


RECESSED TRACK


©Louvretec 2025 – All Rights Reserved. Technical specifications subject to change without notice.

**TYPICAL DETAIL :**
**3 TRACK PLAN VIEW**

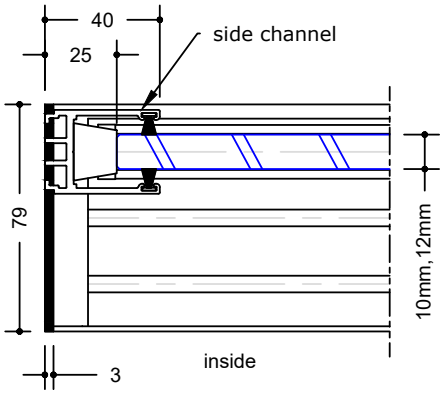


STANDARD LAYOUT WITH SIDE CHANNELS

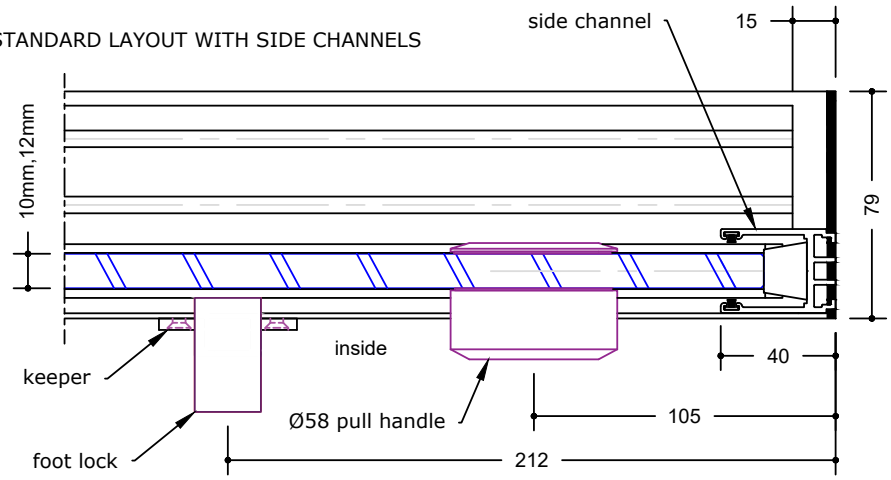


CLOSING OPTION: NO SIDE CHANNELS

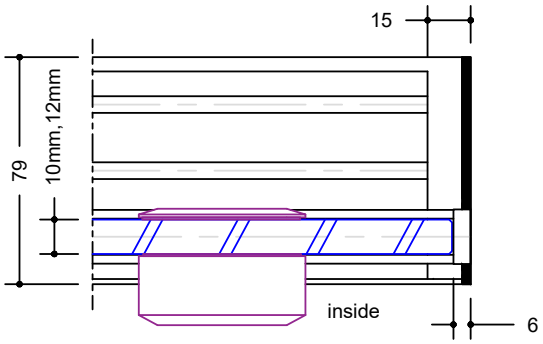


GLASS OVERLAP & PICK UP BLOCKS

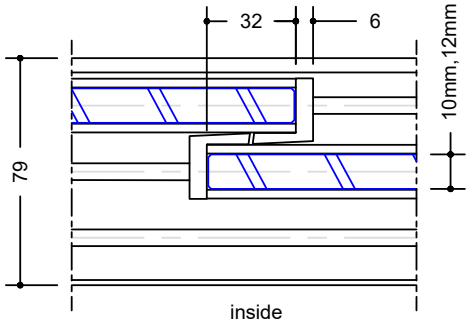


SLIDE ONE WAY & MEET-IN-THE-MIDDLE (MIM)

CLOSING OPTION: EDGE WITH BRUSH PILE

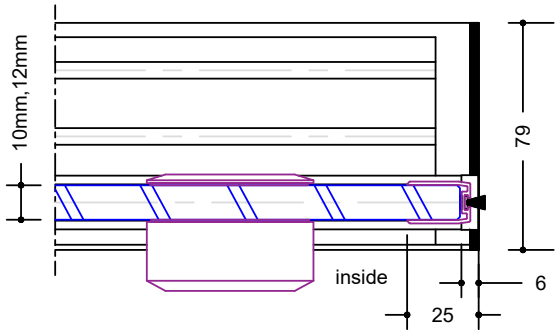


MEET IN THE MIDDLE(MIM)

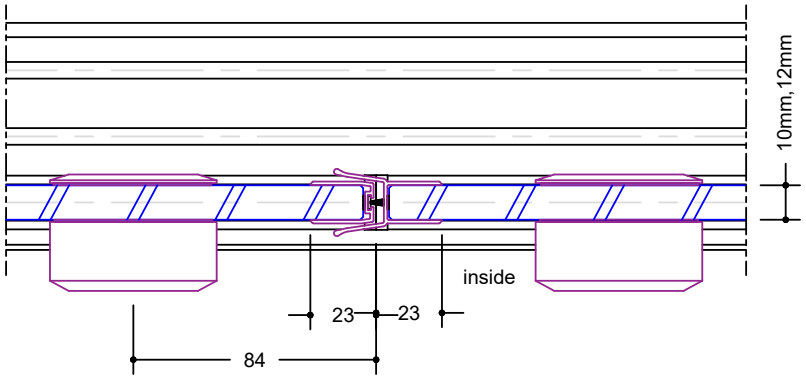




FILE: SLIDETEC 5.12 DATE MODIFIED: 01/10/2024 SCALE:

www.louvretec.co.nz www.louvretec.com.au

©Louvretec 2025 - All Rights Reserved. Technical specifications subject to change without notice.





STANDARD 4 PANEL

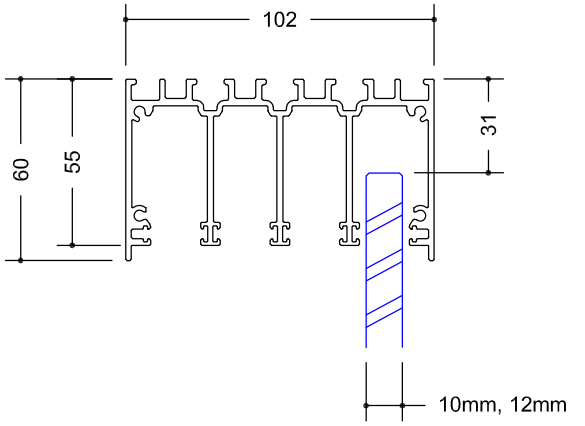


HEAD GUIDE

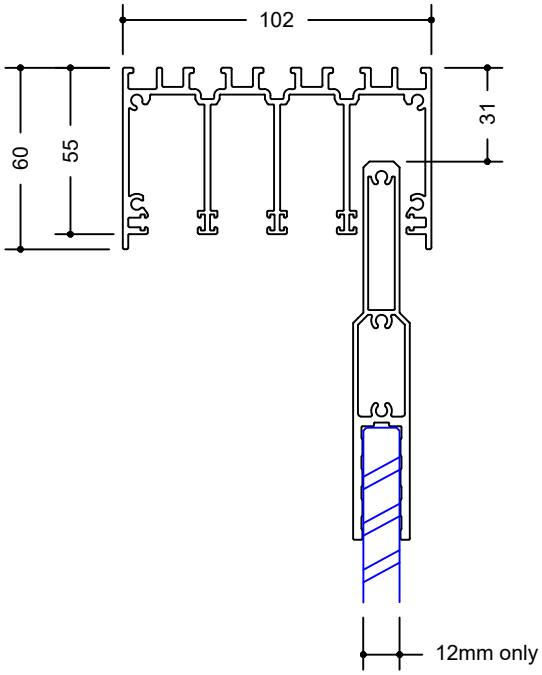


HEAD GUIDE WITH GLASS EXTENDER

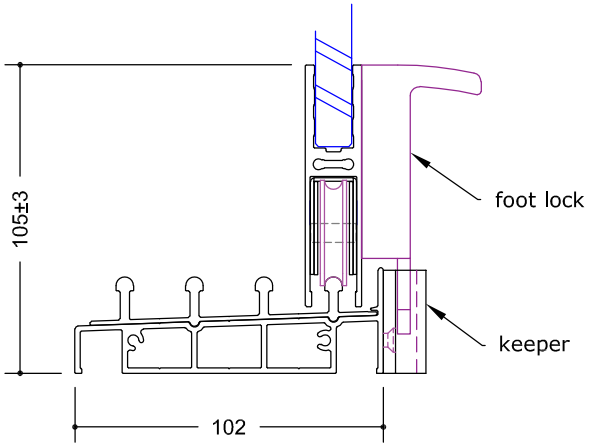


STANDARD BASE/TRACK

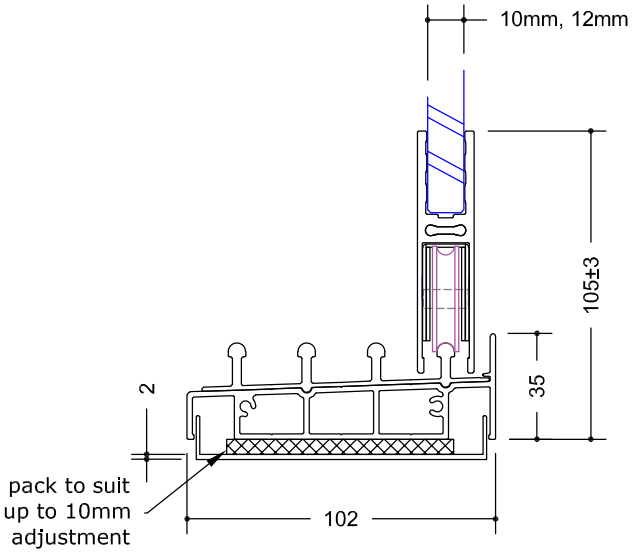


STANDARD BASE/TRACK WITH
ADAPTER CHANNEL


©Louvretec 2025 – All Rights Reserved. Technical specifications subject to change without notice.

**TYPICAL DETAIL :**
**4 PANEL TRACK OPTIONS**

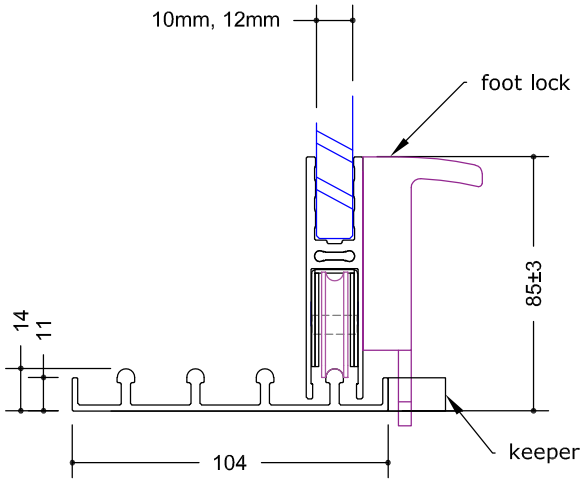


FLUSH TRACK

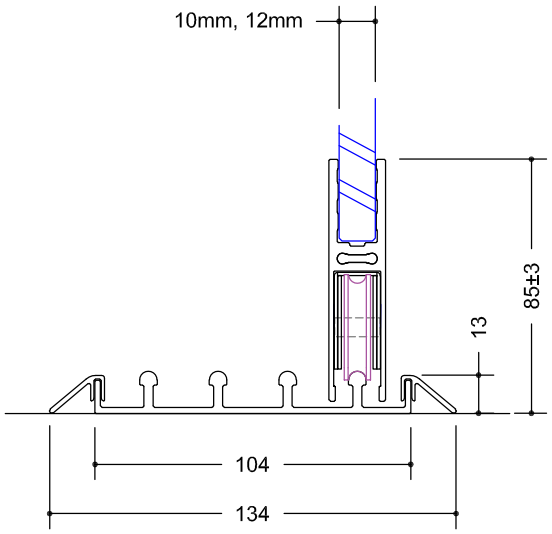


FLUSH TRACK WITH 45° CLIP ONS

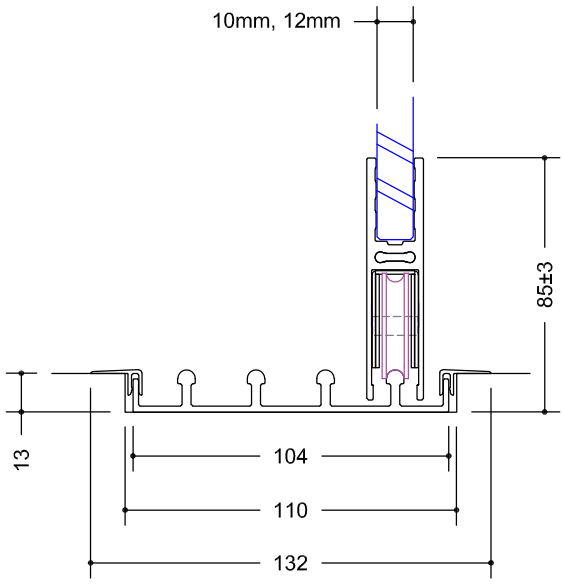


FLUSH TRACK WITH 90° CLIP ONS

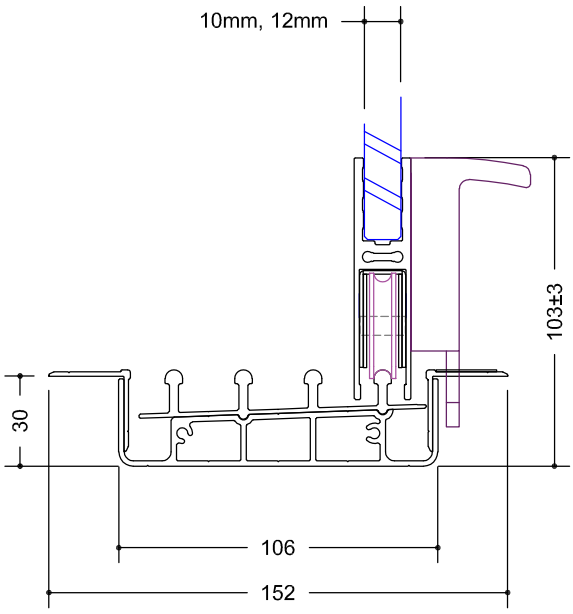


RECESSED TRACK



FILE: SLIDETEC 5.14

DATE MODIFIED: 01/10/2024 SCALE:

www.louvretec.co.nz www.louvretec.com.au

©Louvretec 2025 - All Rights Reserved. Technical specifications subject to change without notice.

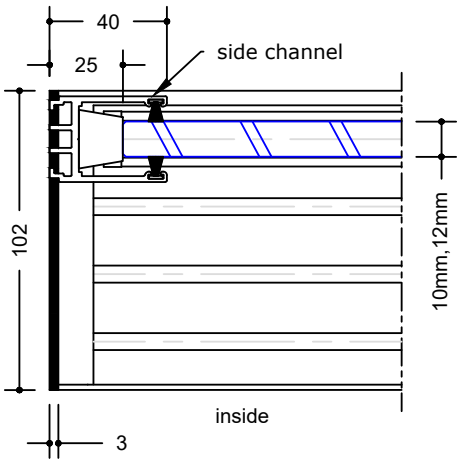


STANDARD LAYOUT WITH SIDE CHANNELS

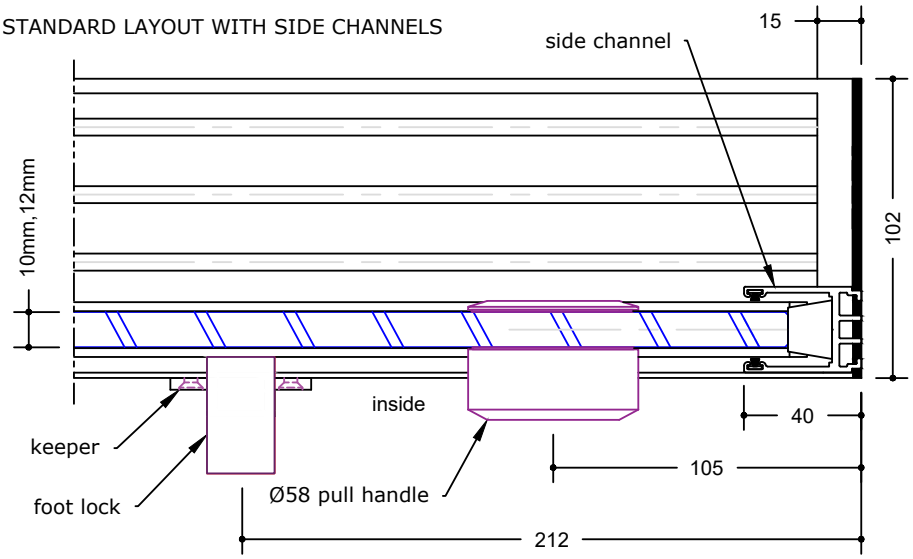


CLOSING OPTION: NO SIDE CHANNELS

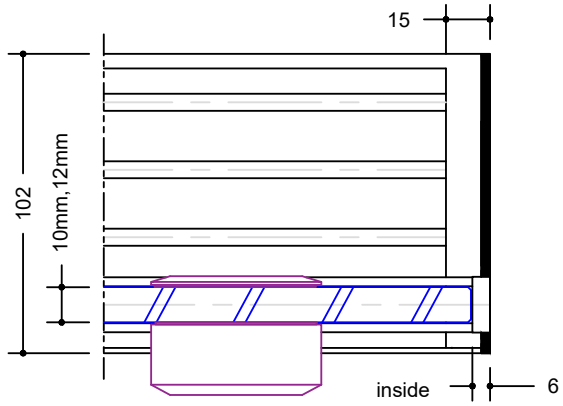


GLASS OVERLAP & PICK UP BLOCKS

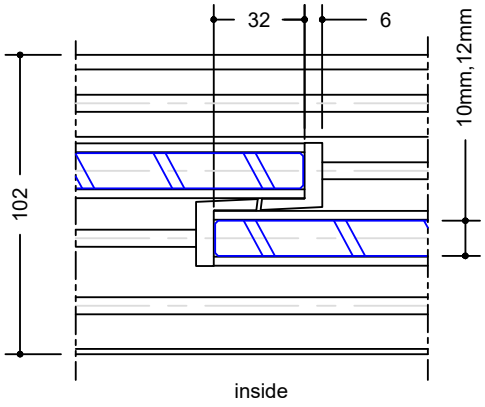


CLOSING OPTION: EDGE WITH BRUSH PILE

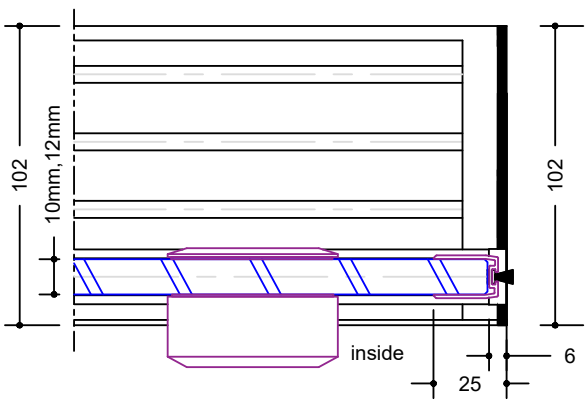


MEET IN THE MIDDLE(MIM)

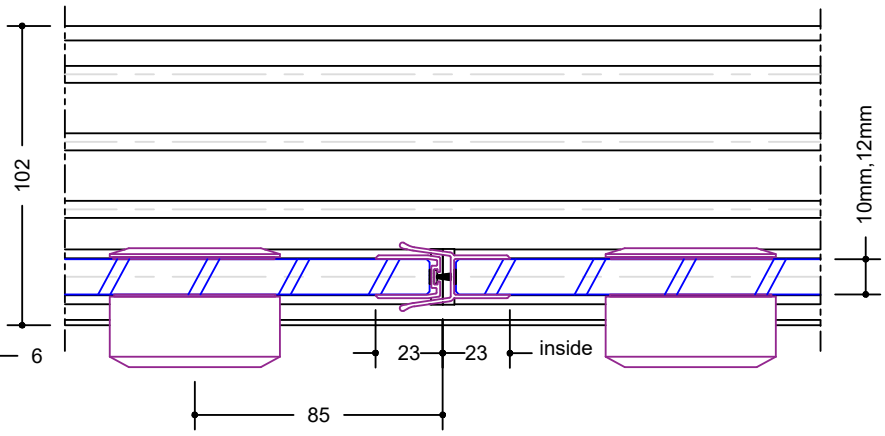



©Louvretec 2025 – All Rights Reserved. Technical specifications subject to change without notice.

**TYPICAL DETAIL :**
**5 PANEL HEAD AND STANDARD TRACK CROSS SECTIONS**



STANDARD 5 PANEL

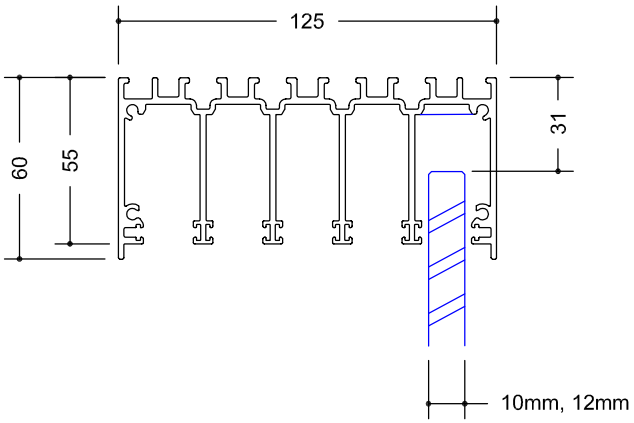


HEAD GUIDE

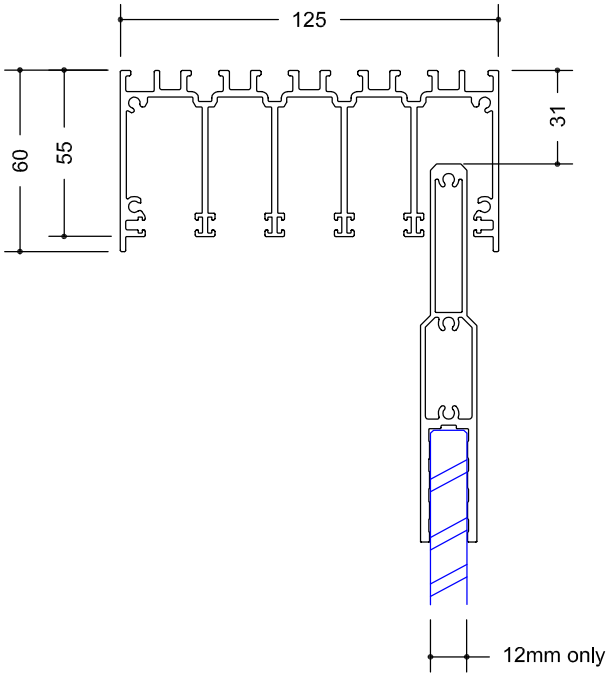


HEAD GUIDE WITH GLASS EXTENDER

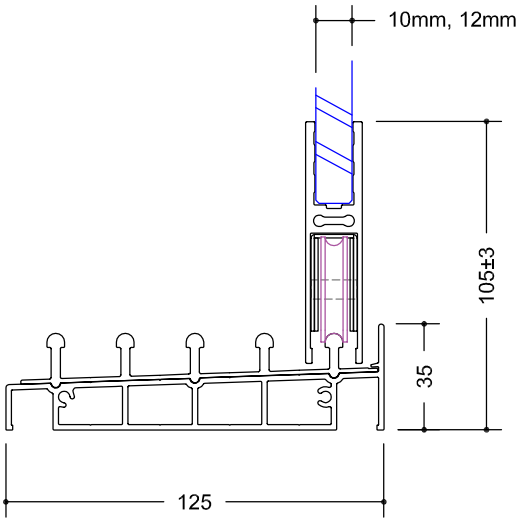


STANDARD TRACK & BASE

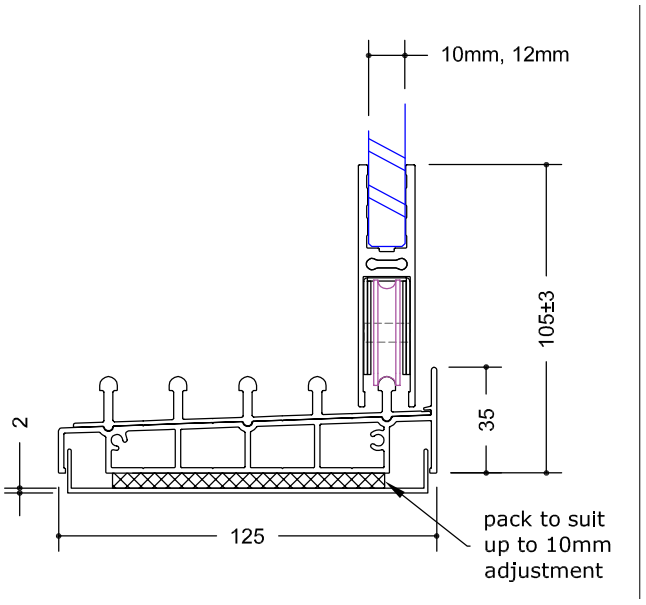


STANDARD TRACK & BASE WITH ADAPTER CHANNEL



FILE: SLIDETEC 5.16 DATE MODIFIED: 01/10/2024 SCALE:

www.louvretec.co.nz www.louvretec.com.au

©Louvretec 2025 – All Rights Reserved. Technical specifications subject to change without notice.

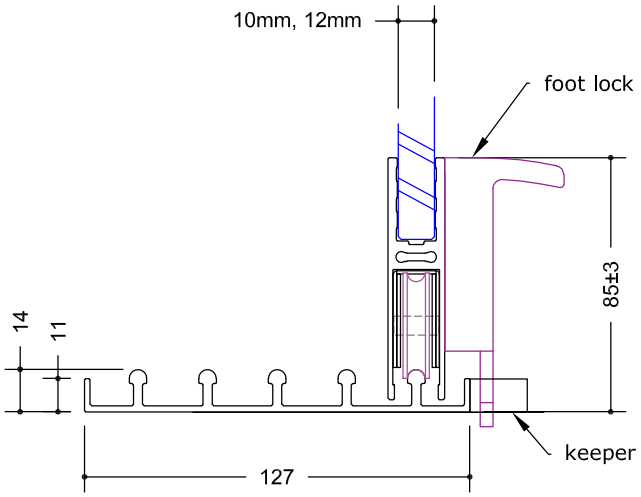


FLUSH TRACK

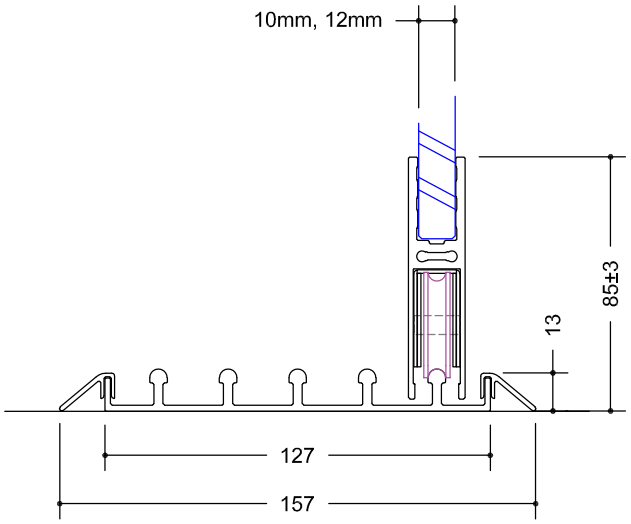


FLUSH TRACK WITH 45° CLIP-ONS

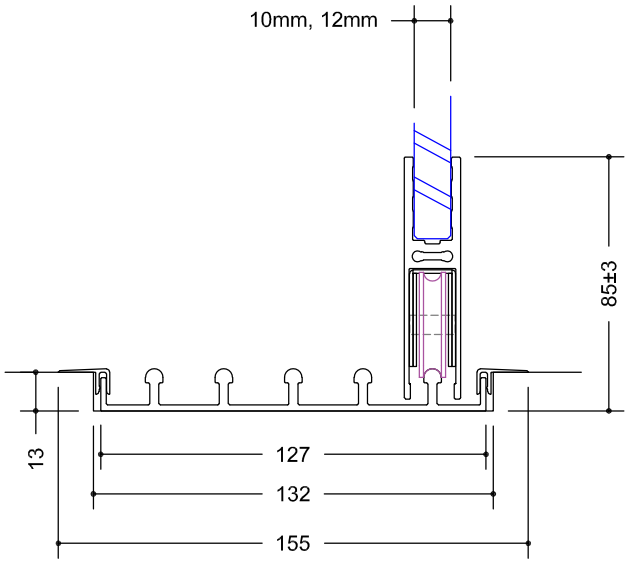


FLUSH TRACK WITH 90° CLIP-ONS

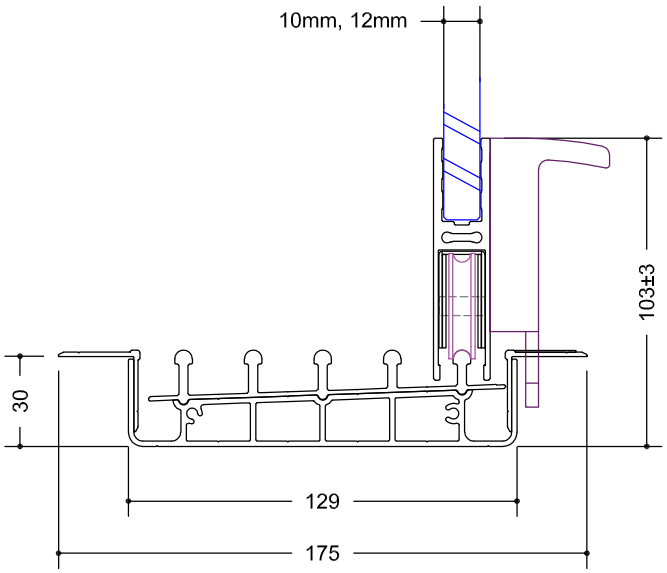


RECESSED TRACK


©Louvretec 2025 – All Rights Reserved. Technical specifications subject to change without notice.

**TYPICAL DETAIL :**
**5 TRACK PLAN VIEW**

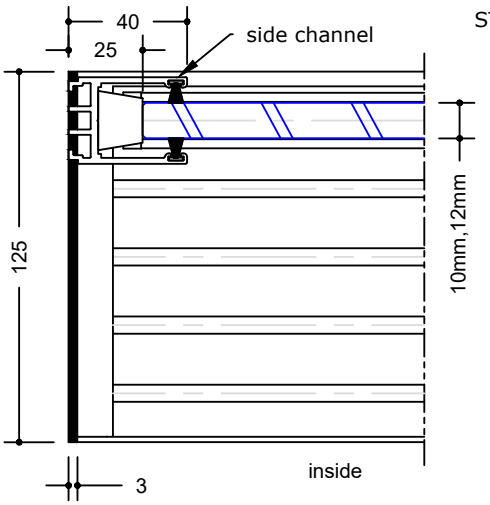


STANDARD LAYOUT WITH SIDE CHANNELS

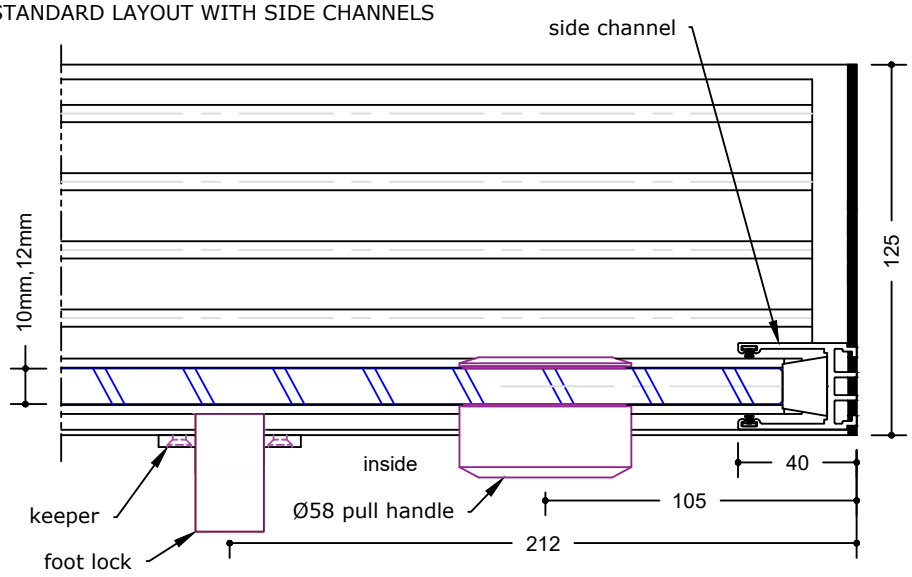


CLOSING OPTION: NO SIDE CHANNELS

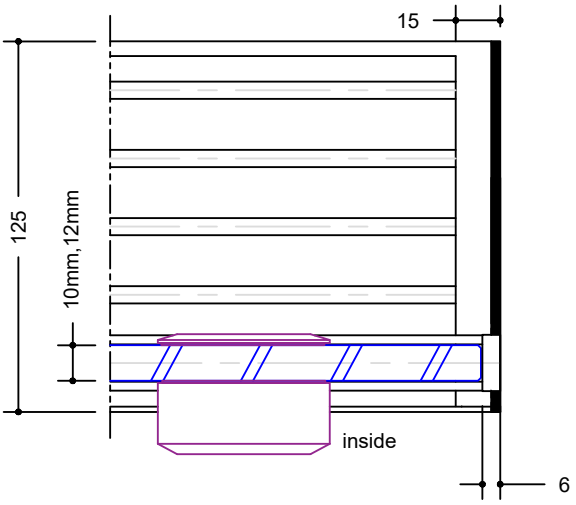


GLASS OVERLAP & PICK UP BLOCKS

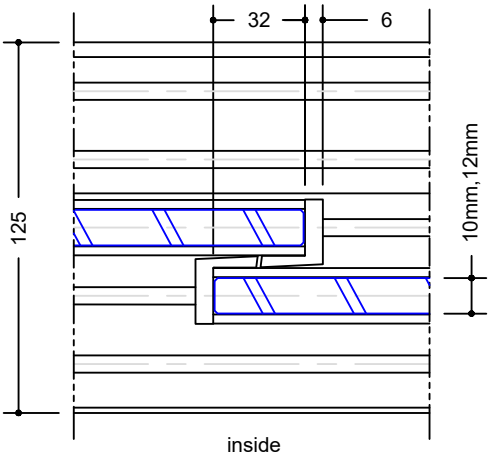


CLOSING OPTION: EDGE WITH BRUSH PILE

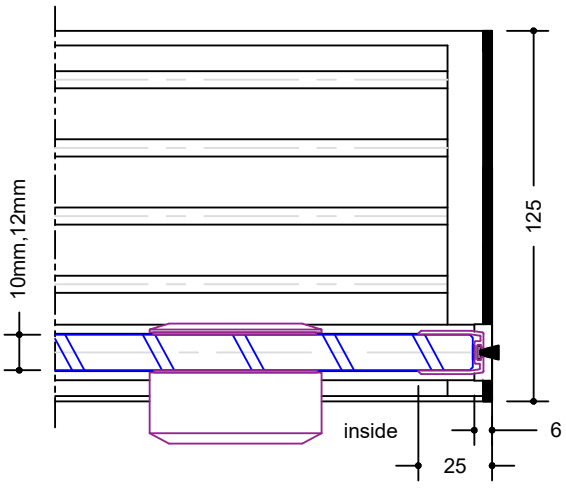


MEET IN THE MIDDLE(MIM)

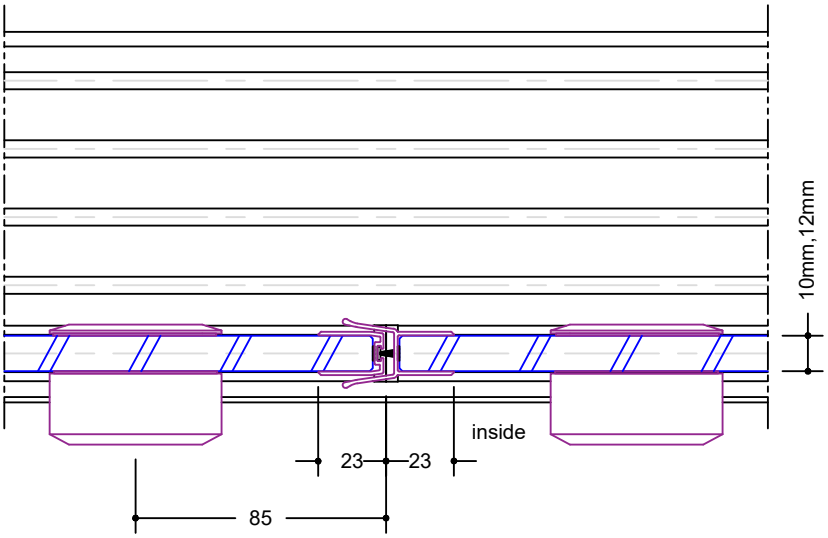




FILE: RETRACT 5.18 DATE MODIFIED: 01/10/2024 SCALE:

www.louvretec.co.nz www.louvretec.com.au

©Louvretec 2025 - All Rights Reserved. Technical specifications subject to change without notice.

## SLIDETEC EXTRUSIONS

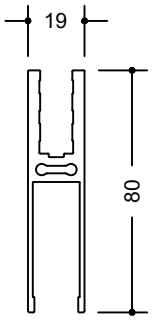


9130
10mm Rail

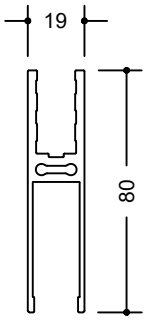


9131
12mm Rail

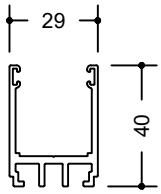


9132
Side Channel

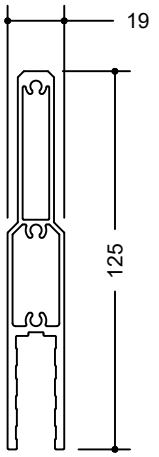


9133
12mm Extender

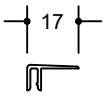


9134
90° Clipon




9135
45° Clipon

for use with flush track only



9214
Recessed Base
Angle



9137
10/12mm Edge

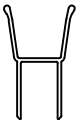

9139
MIM Edge

## SLIDETEC COMPONENTS

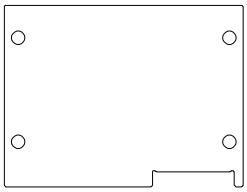

9200
3 Head Cap



9201
4 Head Cap



9202
5 Head Cap

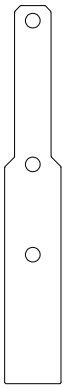

9195
Extender Cap

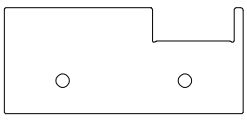

9203
3 Base Cap



9204
4 Base Cap



9205
5 Base Cap


©Louvretec 2025 – All Rights Reserved. Technical specifications subject to change without notice.

SLIDETEC EXTRUSIONS

## FOR 3 PANEL INSTALLATION
DETAILS REFER TO PAGES 5.10 - 5.12

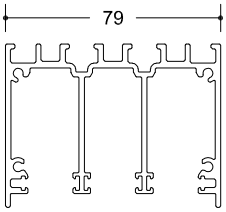


9140
3 Head Guide



9143
3 Standard Track

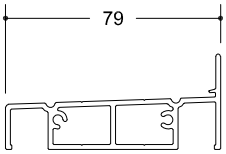


9146
3 Standard Base

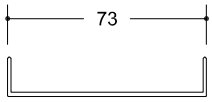


9149
3 Standard Track Adapter *

* NOTE: ADAPTER CHANNELS ALLOWS FOR UP TO 10MM ADJUSTMENT FOR OUT OF LEVEL SURFACES

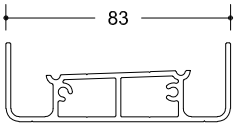


9211
3 Recessed Base

## FOR 4 PANEL INSTALLATION
DETAILS REFER TO PAGES 5.13 - 5.15

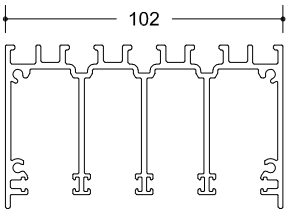


9141
4 Head Guide



9144
4 Standard Track

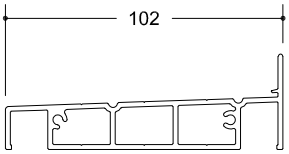


9147
4 Standard Base

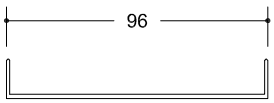


9150
4 Standard Track Adapter *

* NOTE: ADAPTER CHANNELS ALLOWS FOR UP TO 10MM ADJUSTMENT FOR OUT OF LEVEL SURFACES

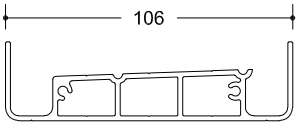


9212
Recessed Base

## FOR 5 PANEL INSTALLATION
DETAILS REFER TO PAGES 5.16 - 5.18

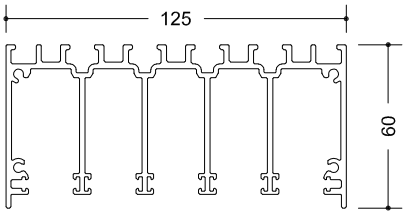


9142
5 Head Guide

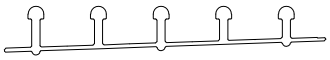

9145
5 Standard Track

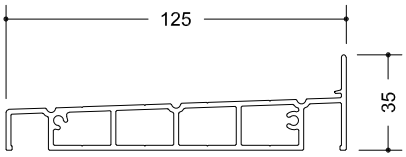


9148
5 Standard Base

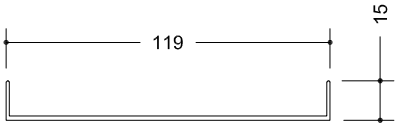


9151
5 Standard Track Adapter *

* NOTE: ADAPTER CHANNELS ALLOWS FOR UP TO 10MM ADJUSTMENT FOR OUT OF LEVEL SURFACES

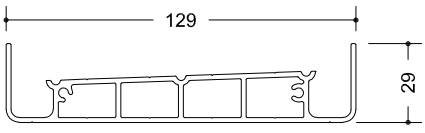


9213
5 Recessed Base

FLUSH TRACK REQUIRING A CONTINUOUS LEVEL SURFACE TO FIX TO

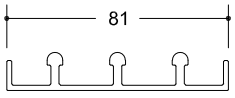


9152
3 Flush Track

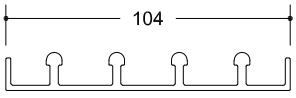


9153
4 Flush Track

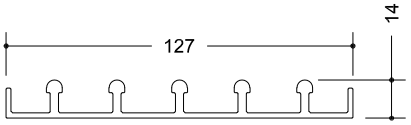


9154
5 Flush Track



FILE: RETRACT 5.20 DATE MODIFIED: 01/10/2024 SCALE:

www.louvretec.co.nz www.louvretec.com.au

©Louvretec 2025 - All Rights Reserved. Technical specifications subject to change without notice.

## SLIDETEC COMPONENTS & HARDWARE - STANDARD



9165 Left
9166 Right
9167 Plain
Glass Rail End Caps - catch panels as they pull along.



9171
Carriage



9169
Back Stop(44mm)
44mm long



9175 Headguide Brushpile for 10mm glass 48-650
9176 Headguide Brushpile for 12mm glass 48-500
9177 Side Channel Brushpile 48-1000



9187
Ø58mm Pull
(S/S)



9188
Ø58mm Pull
(Black PVC)



9178
Double Sided
Tape



9179
Vinyl Wrap



9170
Buffer

## SLIDETEC COMPONENTS & HARDWARE - MEET IN THE MIDDLE (MIM) SETS



9193
MIM Centre Stop

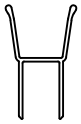

9139
MIM Edge



9137
10/12mm Edge



9222
Edge Wrap


©Louvretec 2025 – All Rights Reserved. Technical specifications subject to change without notice.

FOOT LOCK



9223
Foot Lock



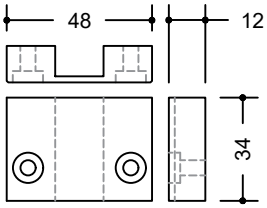


9224
Foot Lock
Keeper Standard
(Alum.)

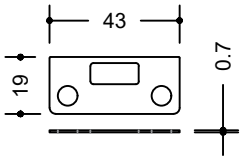


9225
Foot Lock
Keeper Recessed/Flush
(S/S)

SAFE & SECURE

The Foot lock lets you easily lock the Slidetec Frameless Glass Door panels in place by pushing down on top of the Footlock with your foot. The easy to use Footlock has been designed to easily get your foot under the lock when you're ready to unlock and slide the doors back again.




©Louvretec 2025 - All Rights Reserved. Technical specifications subject to change without notice.

# WIND LOADS & DEFLECTIONS

## Calculating glass & overall maximum opening height

### DEFLECTION

The amount of movement of glass under uniform wind pressure (wind load).

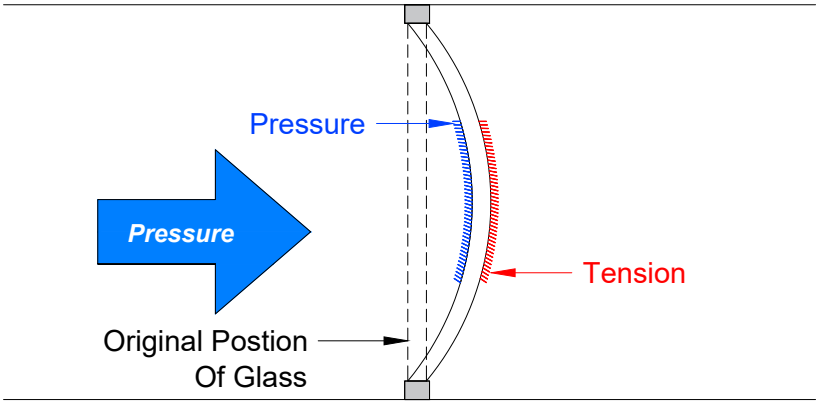


When wind loads are applied to glass it causes both compression and tensile stresses as illustrated in the diagram above.

The face of the glass that has the load imposed on it is subject to compressive stresses for which the glass has a high resistance. The opposite face has the tensile stresses applied to it for which glass has a lower resistance.

10mm & 12mm toughened glass deflects to the same extent, but toughened glass can withstand more deflection before breaking.

### DETERMINING THE WIND LOAD

The actual design wind load pressure for each individual application can be determined by specific engineering design using NZS 4203 or AS/NZS 1170. Most regulatory authorities offer information relevant to the job specific site – on larger projects the project engineer will provide this information. Loads will vary due to ground terrain, building height and glazing location, with much higher loads on the corners of buildings and edges of roofs.

ULTIMATE WIND PRESSURE (UWP)

| WIND ZONE | WIND ZONE SYMBOL | BASIC WIND SPEED M/S | ULTIMATE WIND PRESSURE PA |
|---|---|---|---|
| Low | L | 32 | 650 |
| Medium | M | 37 | 850 |
| High | H | 44 | 1200 |
| Very High | VH | 50 | 1550 |
| Extra High | EH | 55 | - |

©Louvretec 2025 – All Rights Reserved. Technical specifications subject to change without notice.

# GLASS

## The key component - A sheet of toughened 10mm or 12mm glass

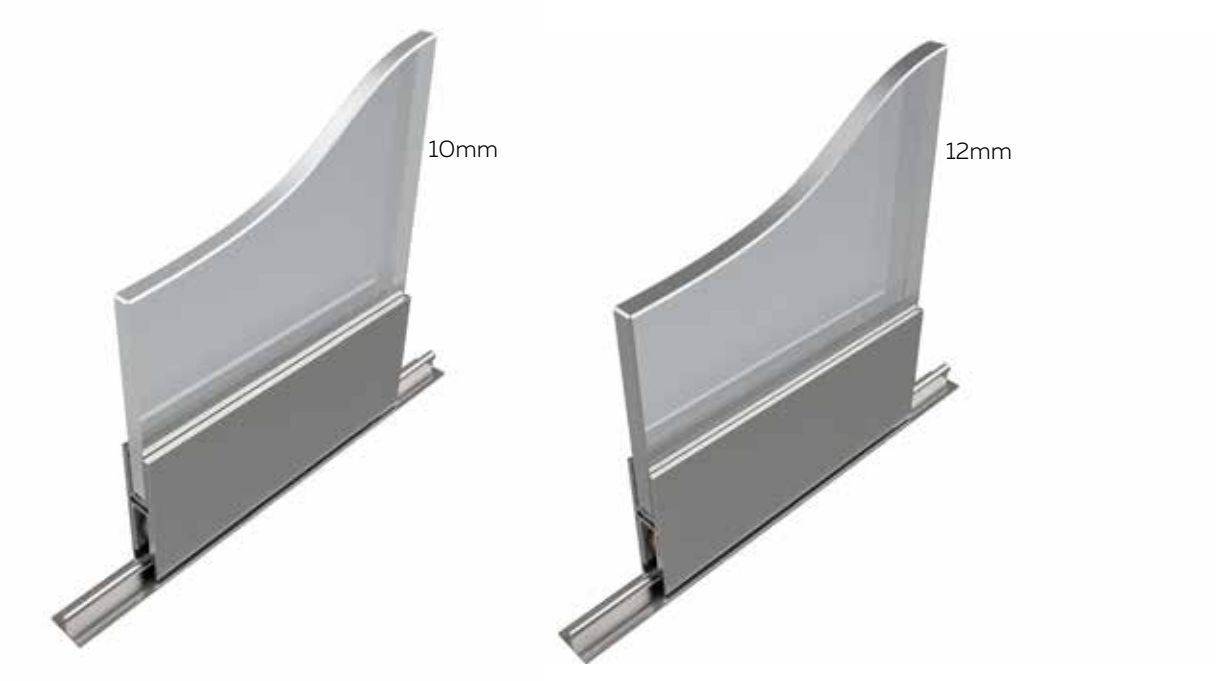


## Everything revolves around the glass

- Slidetec Glass Sliders are designed around the tensile strength or toughened glass.
- The Glass Span Charts (further on in this manual) determine (based on wind zones) the required glass thickness and heights of the panels
- Spans to NZ Standards are based on a specific deflection of span/60 with a max of 40mm in the given wind zone
- The deflection is based on a minimum tensile strength requirement of 70 mPa and is covered by a generic PS1
- This surpasses the NZ/AU Standard minimum and can only be signed off by a suitably qualified engineer with a site specific PS1
- Slidetec can be supplied as completed panels or as pre-finished extrusion cut and milled to size, along with all componentry required. A job specific glass cutting sheet will be supplied to the Dealer who will source the glass locally
- A step by step Installation Guidelines document will be supplied specific to each job


©Louvretec 2025 – All Rights Reserved. Technical specifications subject to change without notice.

# SLIDETEC SPAN CHART

| Glass Span (visible sight line) | | | | | | |
|---|---|---|---|---|---|---|
| | NZS3604 Wind Zone: | Low | Medium | High | Very High | Extra High |
| Glass Thickness | | | | | | |
| 10mm | Maximum Span | 2285 | 2080 | 1855 | 1705 | 1600 |
| 12mm | Maximum Span | 2760 | 2510 | 2235 | 2055 | 1930 |

*Glass spans in this chart limited to installations associated with buildings up to importance level 2, under 10m high, and within a designated general wind-zone (not SED).
*This span chart can only be used in conjunction with toughened safety glass supplied by Viridian Glass (NZ).
*All glass panel related PS1 documents to be supplied by Viridian Glass (NZ).
*This standard design PS1 covers glass selection to NZS4223.3 and NZS4223.4 only (frame design and support of the glass panels is excluded).
*Max glass spans to the NZ standard are based on a maximum allowable deflection of span/60 in the given wind-zone.
*The glass span tables do not take into account any deflection caused by bending of the SlideTec frames.
*Glazing safeguarding a fall of 1m or more requires specific design.

*Minimum panel width = 500mm. Maximum panel width = 2400mm.

The figures below give the maximum opening height per type of application. Refer to sheet 2 of this publication for further explanation / detail.

| Standard Base/Track (includes guide/track of 160mm) | | | | | | |
|---|---|---|---|---|---|---|
| | Wind Zone: | Low | Medium | High | Very High | Extra High |
| Glass Thickness | | | | | | |
| 10mm | Maximum Opening | 2445 | 2240 | 2015 | 1865 | 1760 |
| 12mm | Maximum Opening | 2920 | 2670 | 2395 | 2215 | 2090 |

| Standard Base/Track & Extender (includes guide/track/extender of 260mm) | | | | | | |
|---|---|---|---|---|---|---|
| | Wind Zone: | Low | Medium | High | Very High | Extra High |
| Glass Thickness | | | | | | |
| 10mm | Maximum Opening | 2545 | 2340 | 2115 | 1965 | 1860 |
| 12mm | Maximum Opening | 3020 | 2770 | 2495 | 2315 | 2190 |

| Recessed Base/Track (includes guide/track of 130mm) | | | | | | |
|---|---|---|---|---|---|---|
| | Wind Zone: | Low | Medium | High | Very High | Extra High |
| Glass Thickness | | | | | | |
| 10mm | Maximum Opening | 2415 | 2210 | 1985 | 1835 | 1730 |
| 12mm | Maximum Opening | 2890 | 2640 | 2365 | 2185 | 2060 |

| Recessed Base/Track & Extender (includes guide/track/extender of 230mm) | | | | | | |
|---|---|---|---|---|---|---|
| | Wind Zone: | Low | Medium | High | Very High | Extra High |
| Glass Thickness | | | | | | |
| 10mm | Maximum Opening | 2515 | 2310 | 2085 | 1935 | 1830 |
| 12mm | Maximum Opening | 2990 | 2740 | 2465 | 2285 | 2160 |

| Flush Track (includes guide/track of 140mm) | | | | | | |
|---|---|---|---|---|---|---|
| | Wind Zone: | Low | Medium | High | Very High | Extra High |
| Glass Thickness | | | | | | |
| 10mm | Maximum Opening | 2425 | 2220 | 1995 | 1845 | 1740 |
| 12mm | Maximum Opening | 2900 | 2650 | 2375 | 2195 | 2070 |

| Flush Track & Extender (includes guide/track/extender of 240mm) | | | | | | |
|---|---|---|---|---|---|---|
| | Wind Zone: | Low | Medium | High | Very High | Extra High |
| Glass Thickness | | | | | | |
| 10mm | Maximum Opening | 2525 | 2320 | 2095 | 1945 | 1840 |
| 12mm | Maximum Opening | 3000 | 2750 | 2475 | 2295 | 2170 |

| | |
|---|---|
| Drawn By | Viridian-DY |
| Scale | NA @ A4 |
| Date | Feb 2025 |

LouvreTec™ New Zealand Ltd
All dimensions in mm unless stated otherwise


©Louvretec 2025 – All Rights Reserved. Technical specifications subject to change without notice.

## SPANS: SLIDETEC GLASS SPANS | OUTER FRAME OVERALL MEASUREMENT

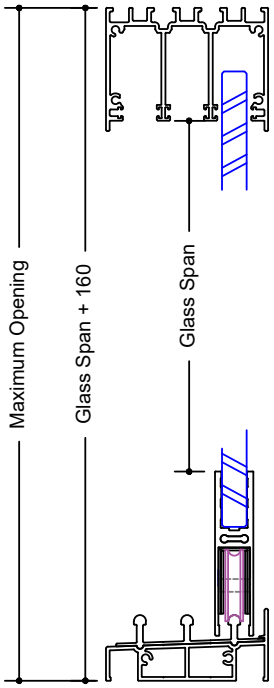


STANDARD BASE TRACK

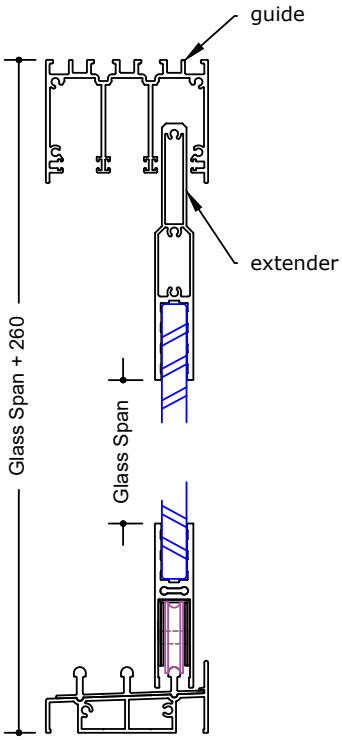


STANDARD BASE TRACK
& EXTENDER

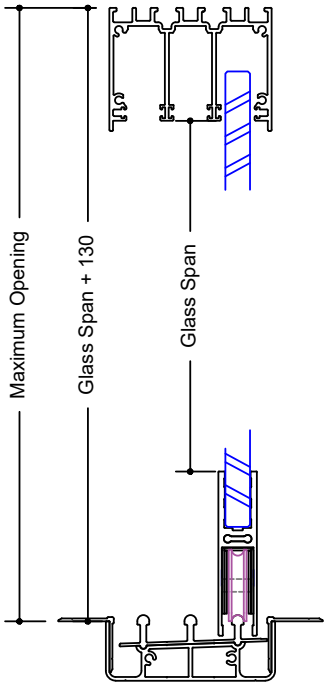


RECESSED BASE TRACK

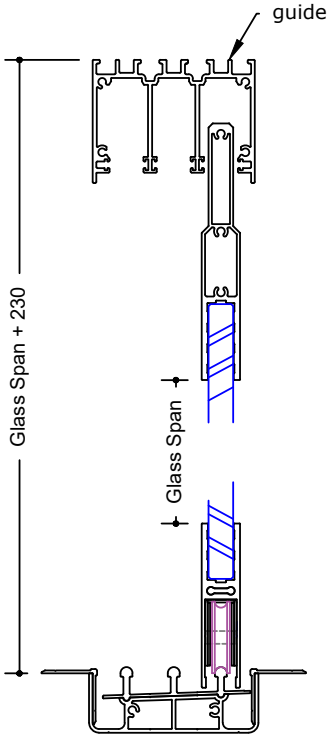


RECESSED BASE TRACK
& EXTENDER

NTS

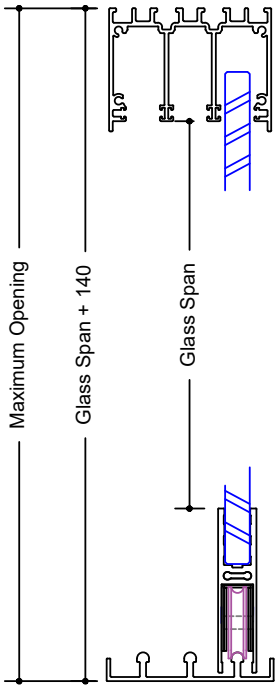


FLUSH TRACK

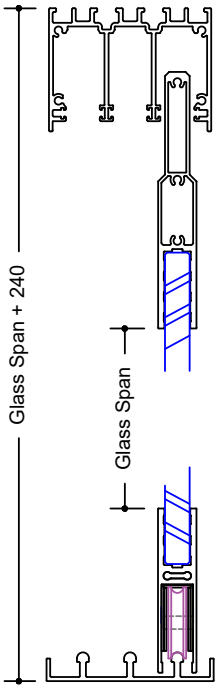


FLUSH TRACK
& EXTENDER

NTS

| | |
|---|---|
| Drawn By | Viridian-DY |
| Scale | 1:3 @ A4 |
| Date | Feb 2025 |

LouvreTec™ New Zealand Ltd
All dimensions in mm unless stated otherwise



FILE: SLIDETEC 5.26 DATE MODIFIED: 01/08/2023 SCALE:

www.louvretec.co.nz www.louvretec.com.au

©Louvretec 2025 - All Rights Reserved. Technical specifications subject to change without notice.

PS1 no: (By Viridian) .
CPEng 1163388
Auckland Council Author Number: 124000
SBGC Author Number: PSA/2020/14

Building Code Clause(s) B1, F2

# PRODUCER STATEMENT – PS1 – DESIGN

**ISSUED BY:** Viridian Glass Ltd Partnership
(Design Firm)

**TO:** LouvreTec NZ
(Owner/Developer)

**TO BE SUPPLIED TO:** ### Council
(Building Consent Authority)

**IN RESPECT OF:** Maximum Viridian Toughened Safety Glass Spans for SlideTec Sliding Panel System.
(Description of Building Work)

**AT:** ###
(Address)

Town/City: ### **LOT** ..... **DP** ..... **SO** .....
(Address)

We have been engaged by the owner/developer referred to above to provide:

Design services with respect to maximum Viridian Toughened Safety Glass spans for SlideTec Sliding Panel System.
This PS1 excludes the design of all supporting structure and substrate beyond the immediate fixings which must be designed by others to NZ Building Code and AS/NZS 1170.
(Extent of Engagement)

services in respect of the requirements of Clause(s) B1, F2 of the Building Code for:

☐ All or ■ Part only (as specified in the attachment to this statement), of the proposed building work.

The design carried out by us has been prepared in accordance with:

■ Compliance Documents issued by the Ministry of Business, Innovation & Employment B1/VM1/AS1 F2/AS1 or
(verification method/acceptable solution)

☐ Alternative solution as per the attached schedule

The proposed building work covered by this producer statement is described on the drawings titled:

Refer attached drawings and numbered Refer attached drawings;
together with the specification, and other documents set out in the schedule attached to this statement.

**On behalf of the Design Firm,** and subject to:
(i) Site verification of the following design assumptions Refer attachment below
(ii) All proprietary products meeting their performance specification requirements;

**I believe on reasonable grounds** that a) the building, if constructed in accordance with the drawings, specifications, and other documents provided or listed in the attached schedule, will comply with the relevant provisions of the Building Code and that b), the persons who have undertaken the design have the necessary competency to do so. I also recommend the following level of construction monitoring/observation:

☐ CM1 ☐ CM2 ☐ CM3 ☐ CM4 ☐ CM5 (Engineering Categories) or ■ as per agreement with owner/developer/Architect

I, Woo Ching, Yong (Dominic) am: ■ CPEng 1163388
(Name of Design Professional)

I am a member of: ■ Engineering New Zealand and hold the following qualifications: BEng.(Hons), Mst Eng

The Design Firm issuing this statement holds a current policy of Professional Indemnity Insurance no less than $200,000*.
The Design Firm is a member of ACE New Zealand: ☐

**SIGNED BY** Woo Ching, Yong (Dominic) (Signature)
(Name of Design Professional)

**ON BEHALF OF** Viridian Glass Ltd Partnership Date Feb 2025
(Design Firm)

*Note: This statement shall only be relied upon by the Building Consent Authority named above. Liability under this statement accrues to the Design Firm only. The total maximum amount of damages payable arising from this statement and all other statements provided to the Building Consent Authority in relation to this building work, whether in contract, tort or otherwise (including negligence), is limited to the sum of $200,000*.*

This form is to accompany **Form 2 of the Building (Forms) Regulations 2004** for the application of a Building Consent.

THIS FORM AND ITS CONDITIONS ARE COPYRIGHT TO ACE NEW ZEALAND AND ENGINEERING NEW ZEALAND

# GUIDANCE ON USE OF PRODUCER STATEMENTS

Producer statements were first introduced with the Building Act 1991. The producer statements were developed by a combined task committee consisting of members of the New Zealand Institute of Architects, Institution of Professional engineers New Zealand (now Engineering New Zealand), ACE New Zealand in consultation with the Building Officials Institute of New Zealand. The original suit of producer statements has been revised at the date of this form as a result of enactment of the Building Act (2004) by these organisations to ensure standard use within the industry.

The producer statement system is intended to provide Building Consent Authorities (BCAs) with reasonable grounds for the issue of a Building Consent or a Code Compliance Certificate, without having to duplicate design or construction checking undertaken by others.

**PS1 Design** Intended for use by a suitably qualified independent design professional in circumstances where the BCA accepts a producer statement for establishing reasonable grounds to issue a Building Consent;

**PS2 Design Review** Intended for use by a suitably qualified independent design professional where the BCA accepts an independent design professional's review as the basis for establishing reasonable grounds to issue a Building Consent;

**PS3 Construction** Forms commonly used as a certificate of completion of building work are Schedule 6 of NZS 3910:2013 or Schedules E1/E2 of NZIA's SCC 2011[2]

**PS4 Construction Review** Intended for use by a suitably qualified independent design professional who undertakes construction monitoring of the building works where the BCA requests a producer statement prior to issuing a Code Compliance Certificate.

This must be accompanied by a statement of completion of building work (Schedule 6).

The following guidelines are provided by ACE New Zealand and Engineering New Zealand to interpret the Producer Statement.

**Competence of Design Professional**

This statement is made by a Design Firm that has undertaken a contract of services for the services named, and is signed by a person authorised by that firm to verify the processes within the firm and competence of its designers.

A competent design professional will have a professional qualification and proven current competence through registration on a national competence based register as a Chartered Professional Engineer (CPEng).

Membership of a professional body, such as Engineering New Zealand (formerly IPENZ) provides additional assurance of the designer's standing within the profession. If the design firm is a member of ACE New Zealand, this provides additional assurance about the standing of the firm.

Persons or firms meeting these criteria satisfy the term "suitably qualified independent design professional".

***Professional Indemnity Insurance**

As part of membership requirements, ACE New Zealand requires all member firms to hold Professional Indemnity Insurance to a minimum level.

The PI Insurance minimum stated on the front of this form reflects standard, small projects. If the parties deem this inappropriate for large projects the minimum may be up to $500,000.

**Professional Services during Construction Phase**

There are several levels of service which a Design Firm may provide during the construction phase of a project (CM1-CM5 for Engineers[3]). The Building Consent Authority is encouraged to require that the service to be provided by the Design Firm is appropriate for the project concerned.

**Requirement to provide Producer Statement PS4**

Building Consent Authorities should ensure that the applicant is aware of any requirement for producer statements for the construction phase of building work at the time the building consent is issued as no design professional should be expected to provide a producer statement unless such a requirement forms part of the Design firm's engagement.

**Attached Particulars**

Attached particulars referred to in this producer statement refer to supplementary information appended to the producer statement.

**Refer Also:**

1 Conditions of Contract for Building & Civil Engineering Construction NZS 3910: 2013

2 NZIA Standard Conditions of Contract SCC 2011

Guideline on the Briefing & Engagement for Consulting Engineering Services (ACE New Zealand/Engineering New Zealand 2004)

4 PN Guidelines on Producer Statements

**www.acenz.org.nz**
**www.engineeringnz.org**





FILE: SLIDETEC 5.28 DATE MODIFIED: 01/10/2024 SCALE:
www.louvretec.co.nz www.louvretec.com.au
©Louvretec 2025 – All Rights Reserved. Technical specifications subject to change without notice.

**Viridian Glass**
15 Waiouru Road,
East Tāmaki,
Auckland 2013
M +64 27 880 2391
E dyong@viridianglass.net.nz

**Re: Clause B2 Statement for Viridian Glass System -:**

We are unable to provide a Producer Statement for Clause "B2 - Durability" of the Building Code because the Ministry of Business Innovation and Employment compliance documents do not contain an effective verification method.

However, for the specific designed structural elements in Viridian Glass Producer Statement PS1, we can confirm the following:

When glass is installed in accordance with NZS 4223 and installation instructions, it will meet the durability requirements of Table 1 Acceptable Solution B2/AS1.

To ensure the durability of the system, the care and maintenance requirements included in the Viridian Glass product manual must be met. Please refer attached documents.

Yours sincerely,

Dominic Yong
CPEng 1163388

**Viridian Glass**
15 Waiouru Road,
East Tāmaki,
Auckland 2013
M +64 27 880 2391
E dyong@viridianglass.net.nz

**To Whom It May Concern**

**Construction Monitoring**

The design is based on the verification of construction specified in the PS1 by a suitably qualified professional.

Inspection shall include at least the following:

- The glass type, thickness and dimensions are as provided by the PS1, and are supplied by Viridian Glass.
- The permanent glass markings are visible after installation, and meet the requirements of NZS 4223.
- The hardware and fixings are supplied and installed at the specified centres as per the PS1.
- Substitution of glass or hardware is not allowed.
- The supporting structures has been engineered by a suitably qualified design professional to support design loads from the glass. This is not responsibility of Viridian Glass.

We note additional inspections will be required as part of the Council's normal inspection regime.

Yours sincerely,



Technical Manager
CPEng | CMEngNZ | Mst.Eng

T 0800 847 434 | F 64 9 573 0389
15 Waiouru Rd, Highbrook, Auckland 2013
www.viridianglass.co.nz

## CARE AND MAINTENANCE

To ensure the long-term durability of glass, regular washing and drying are necessary. In urban areas, it is recommended to wash them every three to six months. The following guidelines should be followed:

a. When washing, soak the glass surface with a mild soap detergent solution, warm water, or proprietary glass cleaners to loosen dirt and debris.

b. Use a soft, grit-free cloth or sponge to wash the glass and avoid washing in direct sunlight. Do not use scrapers or razor blades.

c. After washing, rinse the glass with clean water and dry it using a clean, grit-free squeegee, cloth, or paper towel. Remember that wet glass can be dirty.

d. Ensure that all water and cleaning solution residue is dried from the gaskets, sealants, and frames to prevent water spots.

e. Avoid cleaning tinted and reflective glass surfaces in direct sunlight.

f. For laminated glass, use the same washing procedures as above, but be careful not to allow solvents to come into contact with the edge laminate interlayer.

g. It is recommended to check that hardware drainage is not blocked, as this can affect laminated glass.


©Louvretec 2025 - All Rights Reserved. Technical specifications subject to change without notice.



OVERHEAD RECTANGULAR PANELS



OVERHEAD RAKING PANEL



FULL HEIGHT FIXED PANEL

# 2. SLIDETEC FIXED PANELS GLAZING SYSTEM

## Fixed glass panels to compliment Slidetec Doors & Windows

Slidetec Fixed Panels are designed to compliment the Slidetec Sliding Door & Window system.

## Two typical applications

### 1. Fixed overhead panels

If the sliding panel is over height and exceeds design limitations, a suitably sized fixed overhead panel can be fitted.

Fixed overhead panels can also be used on pitched roof frames to square up the opening to allow for a sliding panel to be installed under.

### 2. Full height fixed panels

Ideal to use to provide light and shelter as a full height fixed panel when sliding access is not required.

©Louvretec 2025 – All Rights Reserved. Technical specifications subject to change without notice.

## PANEL DETAILS

Top fixed panels to reduce the height of an over height opening.

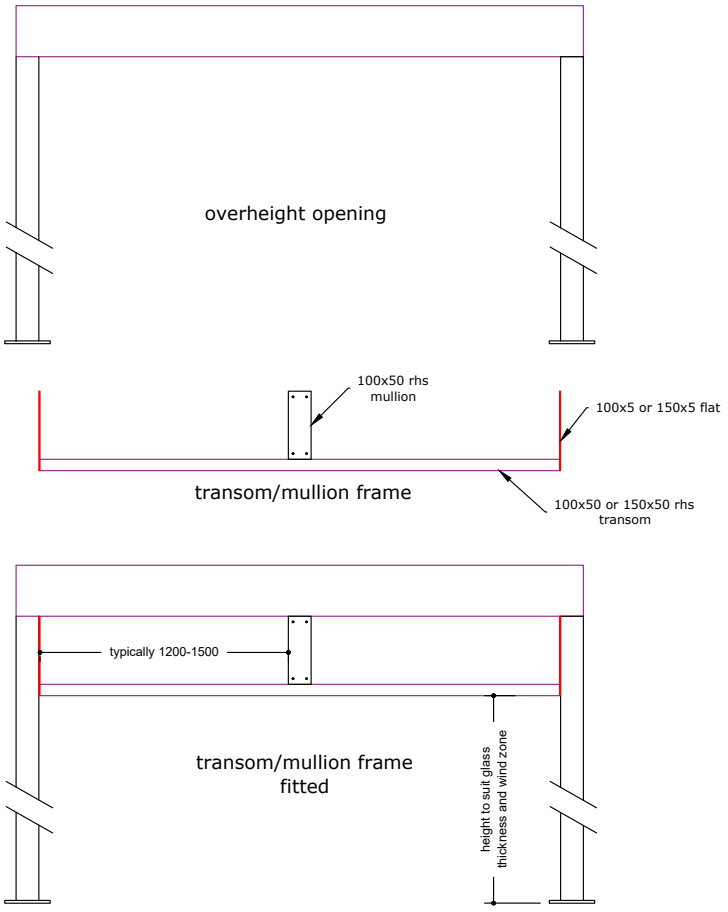


## RAKING FIXED PANELS

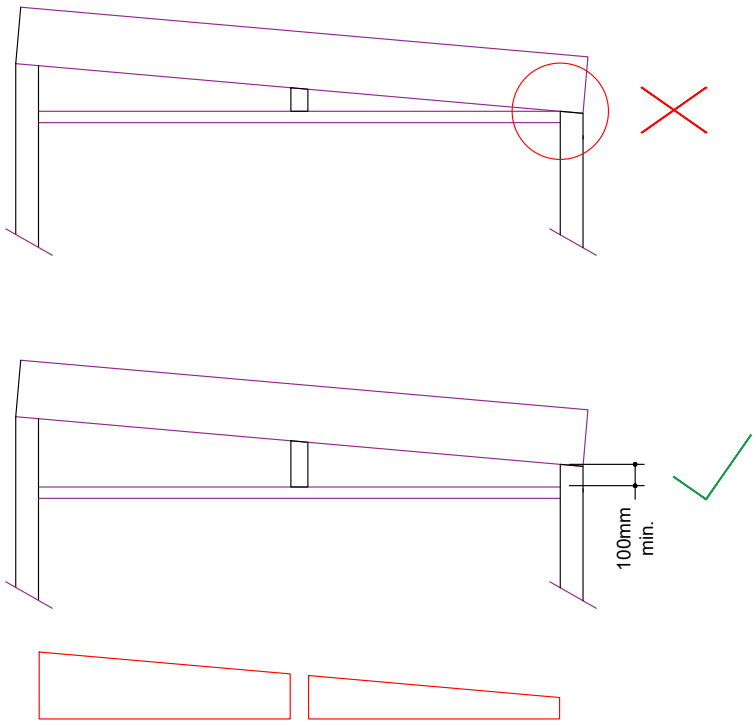




FILE: SLIDETEC 5.32 DATE MODIFIED: 01/10/2024 SCALE:

www.louvretec.co.nz www.louvretec.com.au

©Louvretec 2025 - All Rights Reserved. Technical specifications subject to change without notice.

# TWO FIXING SYSTEMS

## 1. Flush Fit fixed option

This simple 'traditional' system has the advantage of minimal clean lines and hidden fixings.

Designed with pocket fit flush within existing openings.



OVERHEAD RECTANGULAR PANELS




OVERHEAD RAKING PANELS



FIXED GLAZING PANELS

©Louvretec 2025 – All Rights Reserved. Technical specifications subject to change without notice.

## TYPICAL DETAIL:
## SLIDETEC FLUSH FIT FIXED GLAZING PANELS

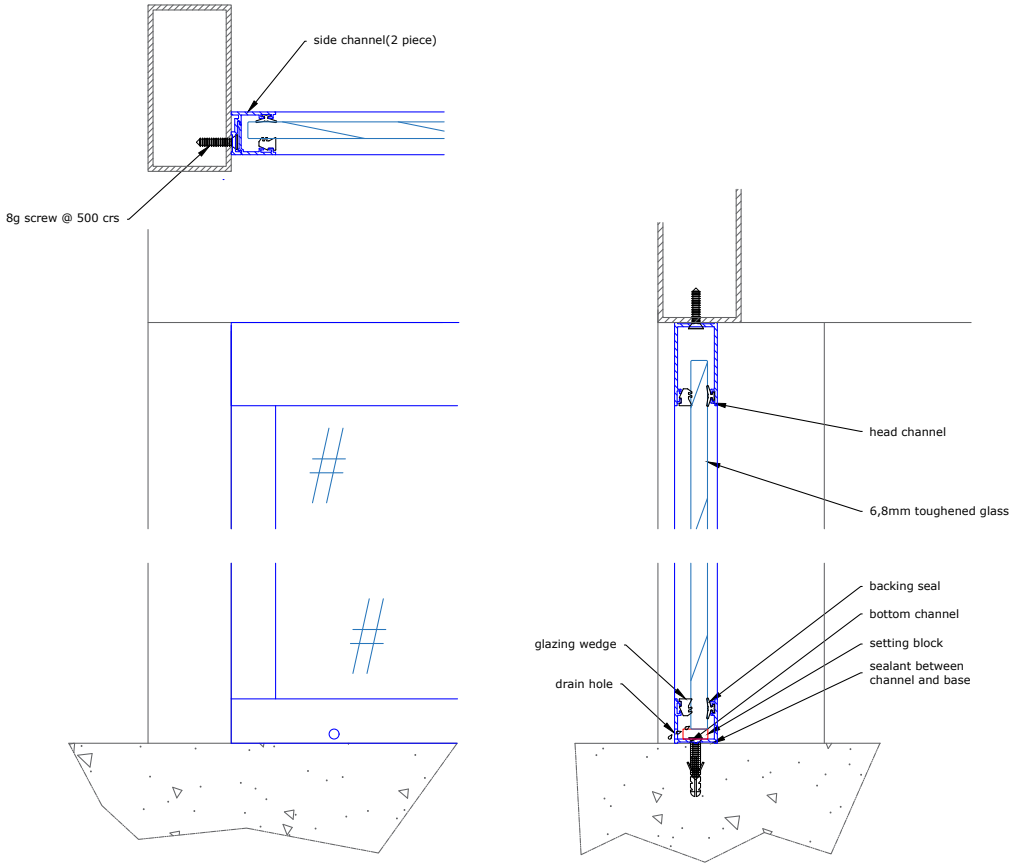


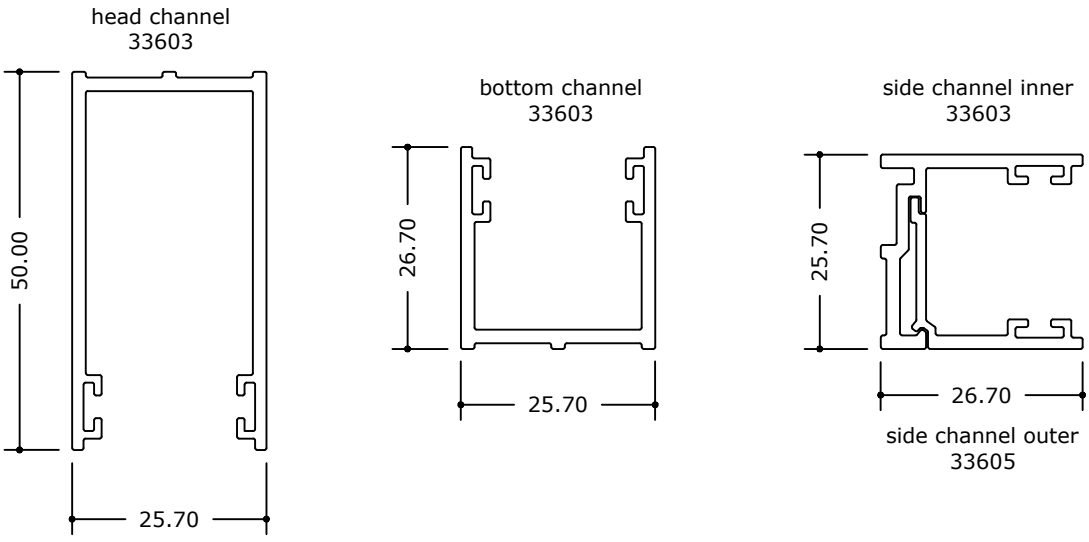


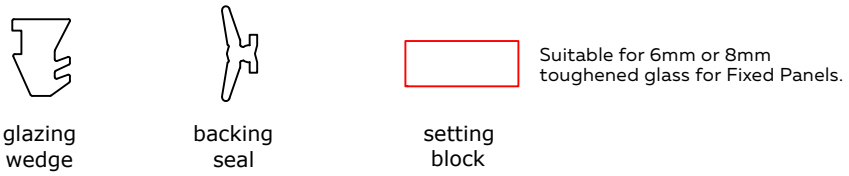




FILE: SLIDETEC 5.34 DATE MODIFIED: 01/10/2024 SCALE:

www.louvretec.co.nz www.louvretec.com.au

©Louvretec 2025 – All Rights Reserved. Technical specifications subject to change without notice.

GLASS DEDUCTIONS

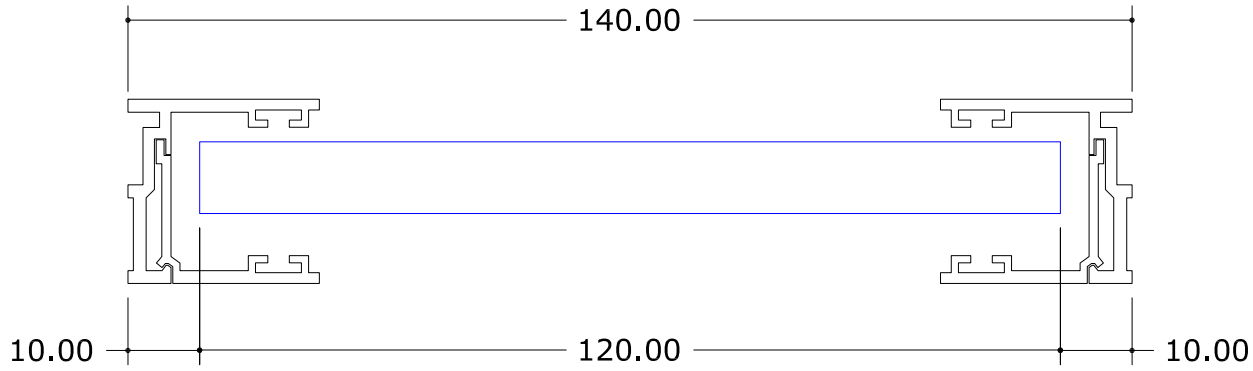


CROSS SECTION WIDTH - GLASS WIDTH = OVERALL WIDTH -20MM

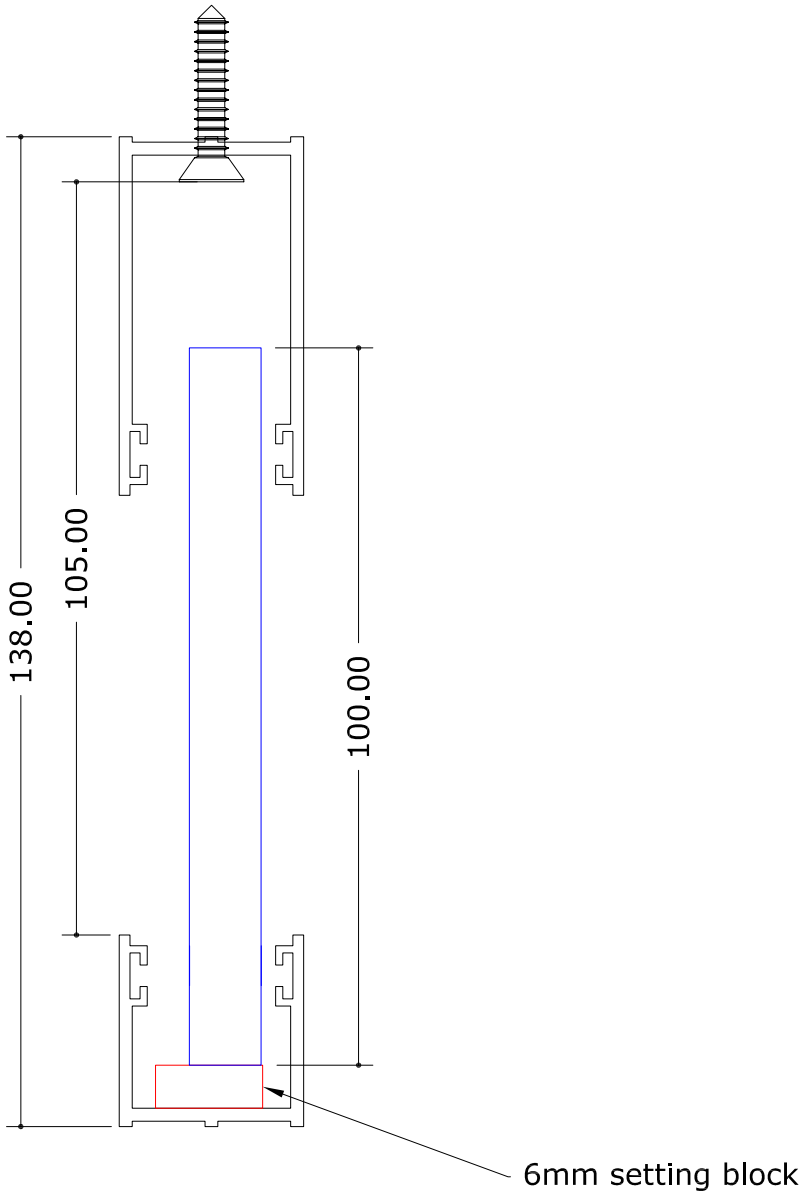


CROSS SECTION HEIGHT - GLASS HEIGHT = OVERALL HEIGHT -38MM


©Louvretec 2025 – All Rights Reserved. Technical specifications subject to change without notice.

# TWO FIXING SYSTEMS

## 2. Face Fixed option

This system is based on typical aluminium joinery design, incorporating a facing to all four sides of the outer frame.

In contrast to the Flush Fixed option, this section incorporates a flange to the outer frame enabling the glass panel to be fixed directly through the flange to the face of the opening.

A glazing channel clip provides cover to hide the fixings.

The flange may be ripped smaller at the glazing channel rip line.



OVERHEAD RECTANGULAR PANELS




OVERHEAD RAKING PANELS



FIXED GLAZING PANELS

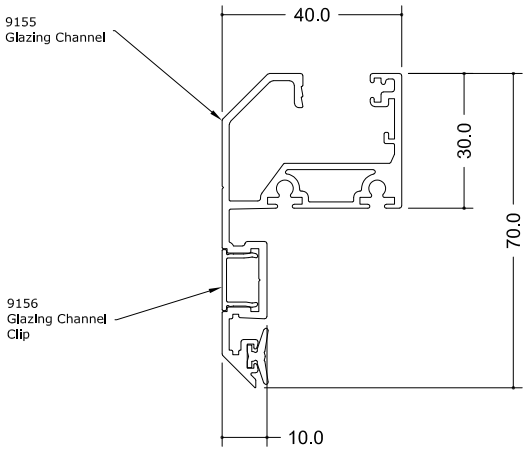


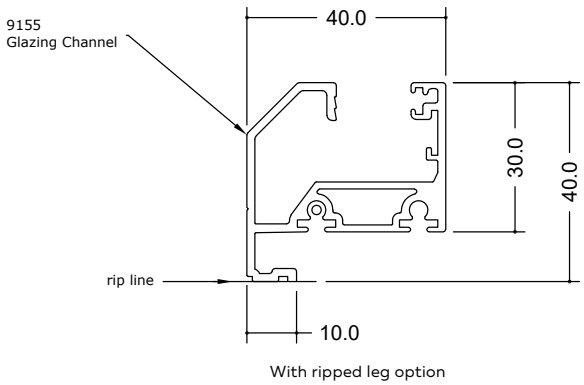


With ripped leg option



©Louvretec 2025 – All Rights Reserved. Technical specifications subject to change without notice.

TYPICAL FIXING DETAILS

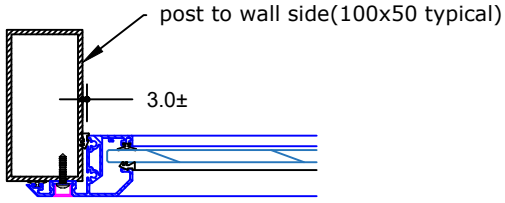


**H - WITHOUT POST FOOT**

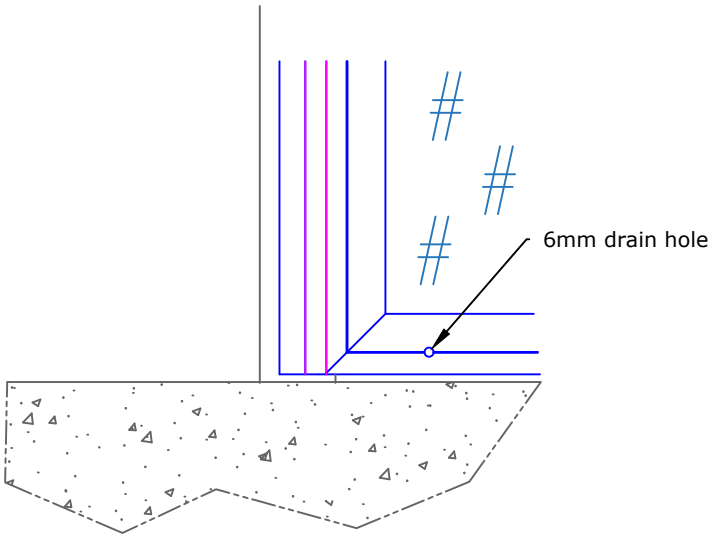


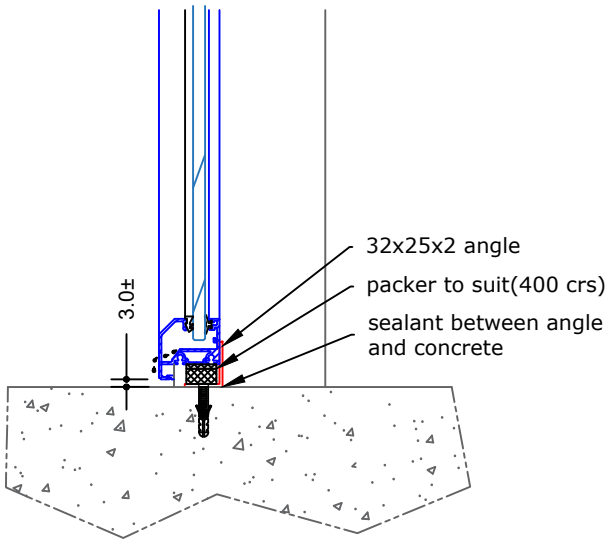


**SECTION H**

COMPONENTS

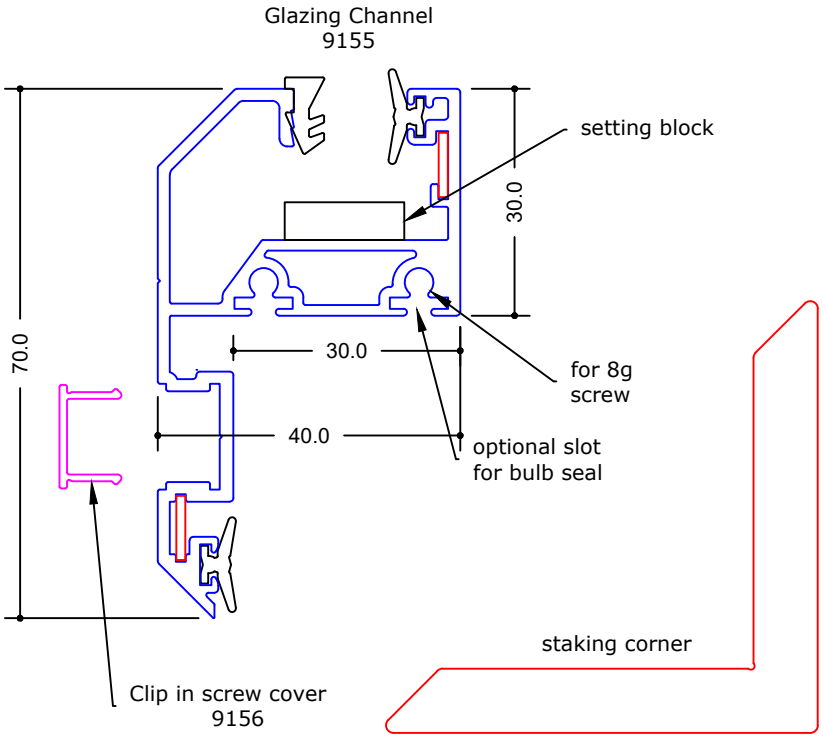


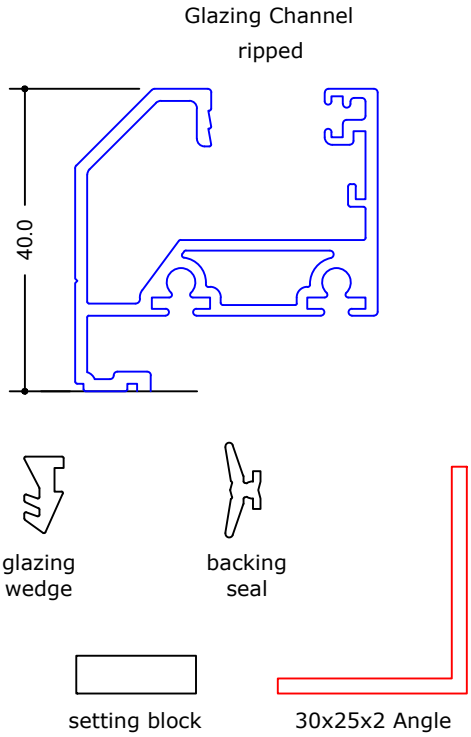



©Louvretec 2025 – All Rights Reserved. Technical specifications subject to change without notice.

**TYPICAL DETAIL:**
**SLIDETEC FACE FIXED, FIXED GLAZING PANELS**

TYPICAL FIXING DETAILS

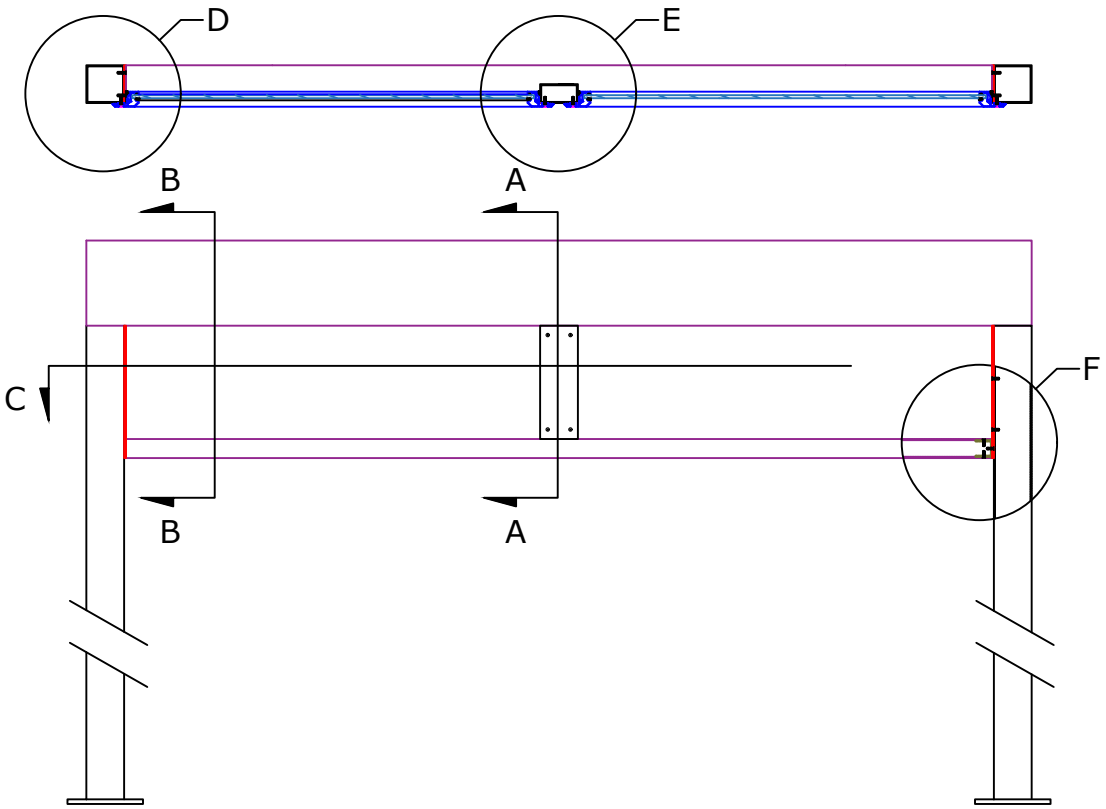


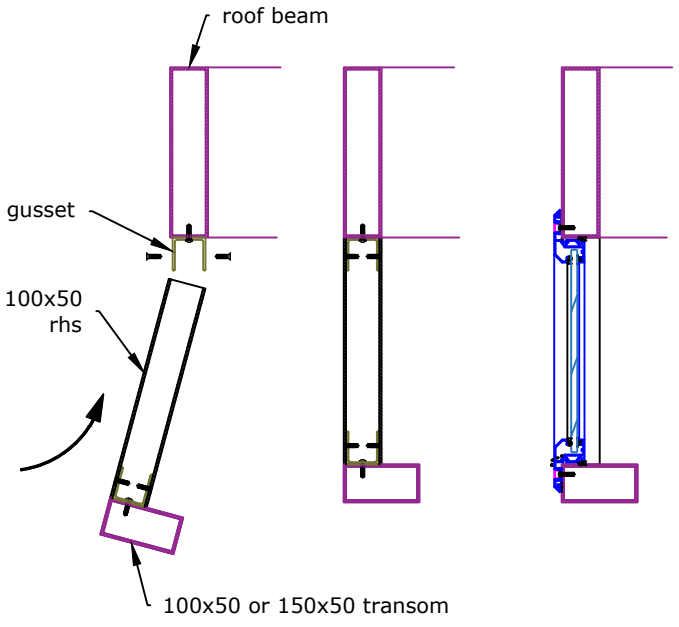


**SECTION A: MULLION FIXING**

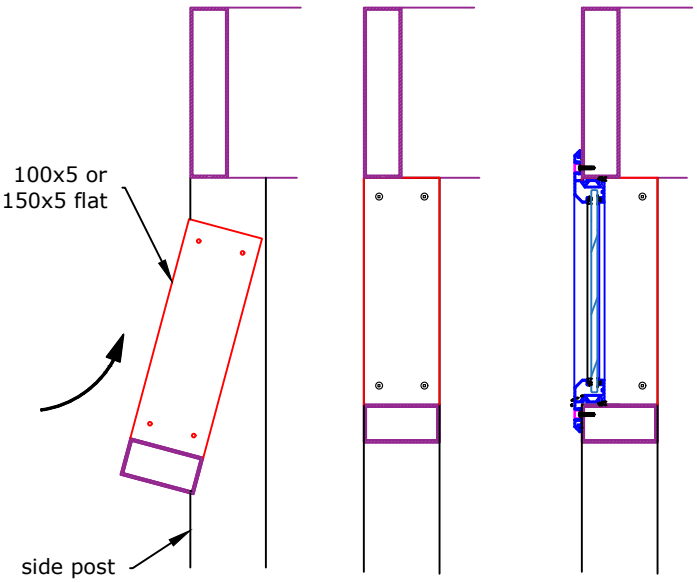


**SECTION B: TRANSOM FIXING AT SIDES**



FILE: SLIDETEC 5.38 DATE MODIFIED: 01/10/2024 SCALE:

www.louvretec.co.nz www.louvretec.com.au
©Louvretec 2025 – All Rights Reserved. Technical specifications subject to change without notice.

TYPICAL FIXING DETAILS

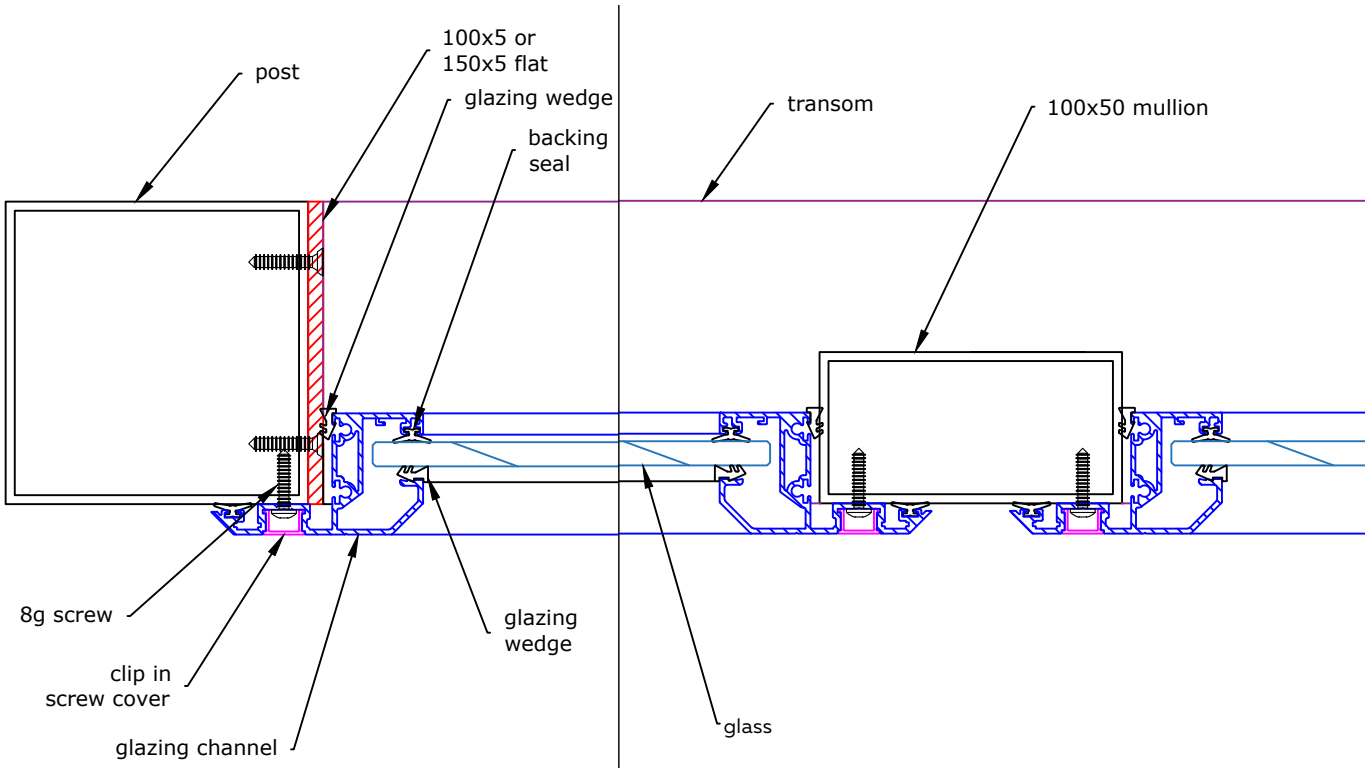


**DETAIL D** **DETAIL E**

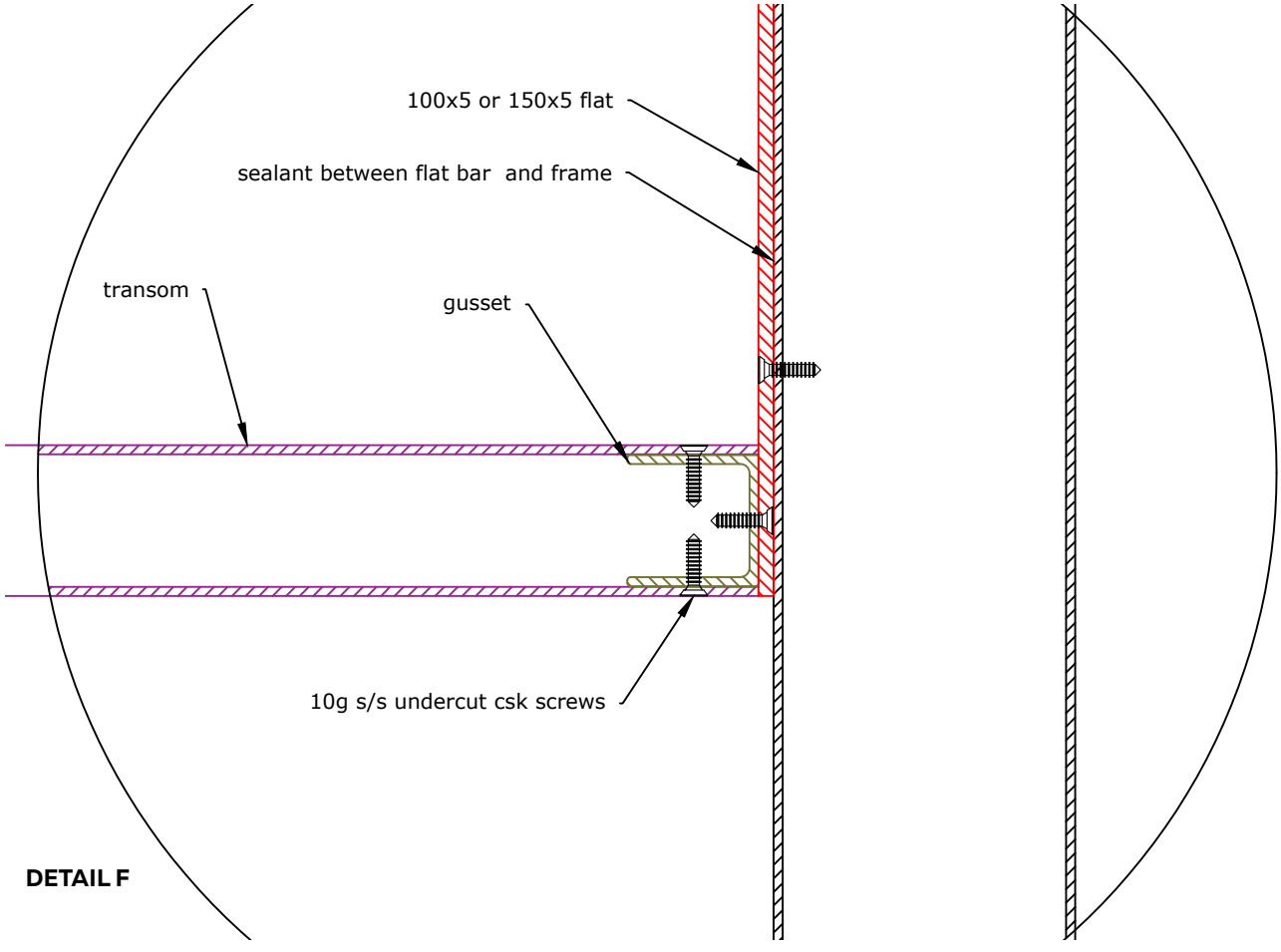


**DETAIL F**


©Louvretec 2025 – All Rights Reserved. Technical specifications subject to change without notice.

**TYPICAL DETAIL:**
**SLIDETEC FACE FIXED, FIXED GLAZING PANELS**

TYPICAL FULL HEIGHT FIXED PANELS

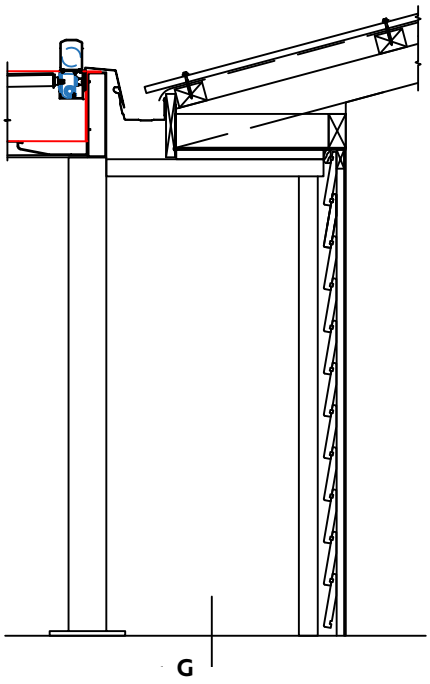

G

**WITH POST FOOT**

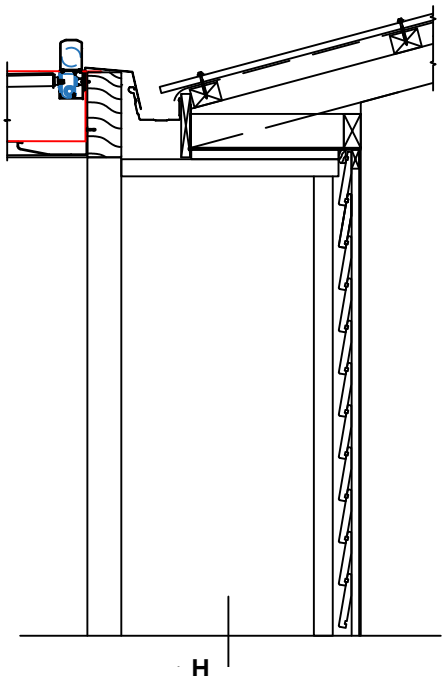

H

**WITHOUT POST FOOT**

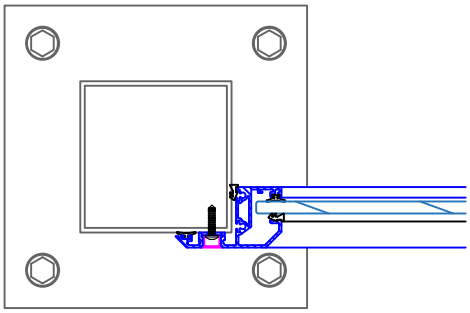

**G - WITH POST FOOT**

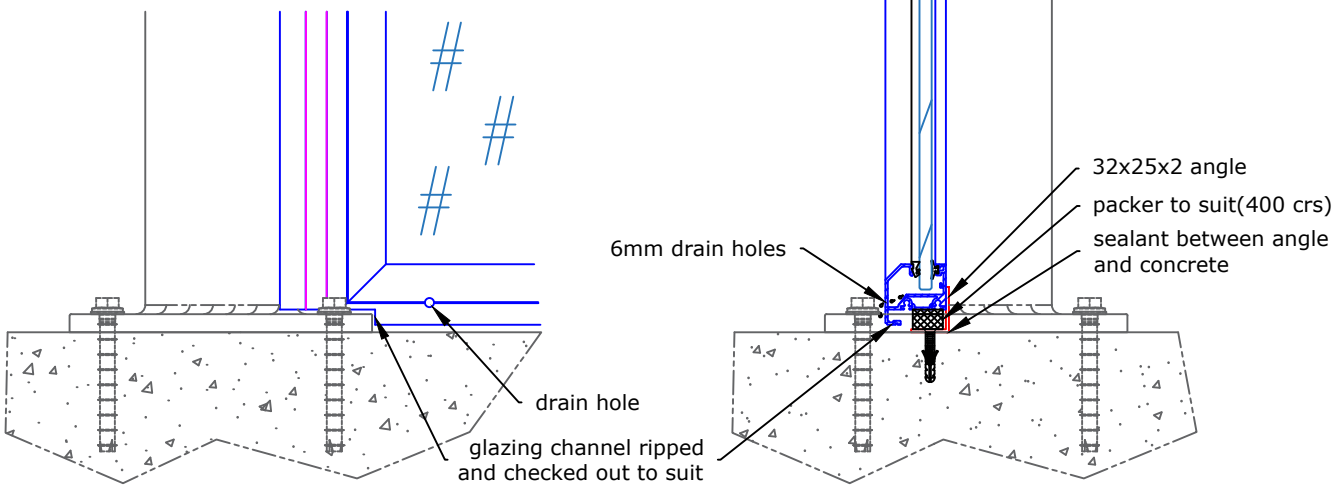


**SECTION G**



FILE: SLIDETEC 5.40 DATE MODIFIED: 01/10/2024 SCALE:

www.louvretec.co.nz www.louvretec.com.au

©Louvretec 2025 – All Rights Reserved. Technical specifications subject to change without notice.

# LOUVRETEC PRODUCT WARRANTY

## SLIDETEC FRAMELESS GLASS SLIDING DOORS & PANELS

**The Louvretec range of products:**

All Louvretec branded products are designed and engineered in Australia & New Zealand by Louvretec to comply with relevant AS/NZS standards - refer to full Louvretec Engineering data Design Manual 2025 Section 13.

Louvretec has the most extensive range of outdoor sun shading/ outdoor living products available in Australasia, backed by a comprehensive network of Louvretec Dealers.

Most Louvretec products sold in Australia are made in Australia*

Most Louvretec products sold in New Zealand are made in New Zealand*

*Some specialised products may only be made in Australia or in NZ and are shipped between each country.

**The Authorised Louvretec Dealer Network:**

Your Louvretec product will have been supplied and installed by your local Authorised Louvretec Dealer. All Louvretec Dealerships are privately owned, and the same Louvretec Dealer who supplied your Louvretec will also service your Louvretec.

Your Louvretec product has been "Engineered for Life" and we are committed to ensuring that happens.

**Louvrecare:**

Preventative maintenance and valet. Regular scheduled servicing by a Louvrecare team has real benefits. Louvrecare can vary between Dealerships - consult your local Louvretec Dealer.

LouvreCare
PREVENTATIVE MAINTENANCE & VALET









*Engineered for Life*

LouvreTec®
OPENING & RETRACT ROOFS / SUN LOUVRES / SHUTTERS

©Louvretec 2025 - All Rights Reserved. Technical specifications subject to change without notice.

# LOUVRETEC PRODUCT WARRANTY

slidetec
By Louvretec

## SLIDETEC FRAMELESS GLASS SLIDING DOORS & PANELS

| | |
|---|---|
| warranty details | All product installed by Louvretec (excluding glass*) or an Authorised Louvretec Installer, is from date of invoice, fully warranted for the first two years. This warranty covers workmanship, all componentry (except glass*) with all labour costs included. |
| product materials | All aluminium extrusions used in Louvretec's systems are manufactured in an IS09002 quality assured environment to AS1866 & AS3902 standards. Marine grade T316 stainless steel is used for drive axles, with stainless steel componentry fixings being standard. Plastic injected moulded componentry is all UV stabilised |
| powdercoat finishes | A wide range of exterior powder coat finishes are available. Duralloy or equivalent is the standard finish supplied unless stated otherwise and this carries a 10 year film and colour integrity warranty as per the Dulux Powder and Industrial Coatings Warranty. If your project has used the Duratec powdercoat range please refer to the Dulux Powder and Industrial Coatings Warranty wording. |
| anodised finishes | The current specifications re anodised aluminium range from 12-20-25 microns depth. The greater the microns the better the protection. With regular cleaning anosided material will retain its original integrity for no less than 10 years. |
| fully engineered | Our systems are designed to conform to New Zealand and Australian standards wind loadings. Full engineering details available on request. |
| cleaning | Periodic cleaning is essential to remove dirt, grime and accumulated salt deposits from both powder coated and anodised surfaces. Three steps for cleaning are:<br>1 Carefully remove any loose deposits with a wet sponge.<br>2 Use a soft non abrasive brush and a mild car cleaning detergent solution to remove dust, salt and other deposits.<br>3 Rinse off with clean fresh water.<br>4 Dry glass using a clean grit-free squeegee, cloth or paper towel |
| glass* | The glass chosen for your Slidetec system is fit for all purposes for which they are commonly supplied and are acceptable in appearance and finish to the standard referred to in AS/NZS 4667 and are safe and durable to the standard referred to in NZS 4223 |
| effective from | Warranty effective from _____/_____/_____<br>Louvretec Representative _____ Print name _____<br>Site Adddress _____ |

LOUVRETEC NZ LTD
T +64 9 415 4949
Head office: 23c Douglas Alexander Parade, Albany 0632, Auckland New Zealand
E info@louvretec.co.nz
www.louvretec.com



©Louvretec 2025 – All Rights Reserved. Technical specifications subject to change without notice.



# outdoor blinds

*By Louvretec*


| | |
|---|---|
| Gallery and Overview | 6.02 - 6.06 |
| Overview and options | 6.07 - 6.12 |
| Product Warranty | 6.13 - 6.16 |


©Louvretec 2025 – All Rights Reserved. Technical specifications subject to change without notice.





©Louvretec 2025 – All Rights Reserved. Technical specifications subject to change without notice.




©Louvretec 2025 – All Rights Reserved. Technical specifications subject to change without notice.













1. MESH SHADE BLIND 2. MESH SHADE BLIND 3. OUT TO THE OUTDOOR ROOM 4. MESH SHADE BLIND



©Louvretec 2025 – All Rights Reserved. Technical specifications subject to change without notice.


5.


6.


7.


8.

5. MESH SHADE BLIND 6. OUTDOOR ROOM 7. MESH SHADE BLIND 8. OUTDOOR ROOM

©Louvretec 2025 – All Rights Reserved. Technical specifications subject to change without notice.



MOTORISED OUTDOOR BLINDS - PART OF A LOUVRETEC OUTDOOR ROOM. EACH BLIND SPANNING 5.4 METRES



MT EDEN, AUCKLAND



©Louvretec 2025 – All Rights Reserved. Technical specifications subject to change without notice.



RED BEACH, AUCKLAND

# OUTDOOR BLINDS

## External screening options

Outdoor Blinds are a popular option when considering closing in a Louvretec Room or outdoor space.

Louvretec does not offer a proprietary 'Louvretec branded' Outdoor Blind. There are many excellent brands of Outdoor Blinds available, giving Louvretec Dealers a wide range of product options best suited to compliment a Louvretec installation. The best of both worlds.

## Custom made

All Outdoor Blinds destined to fit within a Louvretec installation are individually site measured and custom made accordingly.

Many Louvretec Dealers carry mill finish stocks & manufacture the Outdoor Blinds themselves with others receiving kits from their local Outdoor Blind supplier.



LOUVRETEC ROOM (OPPOSITE PAGE) AS VIEWED FROM INSIDE
MT EDEN, AUCKLAND

©Louvretec 2025 – All Rights Reserved. Technical specifications subject to change without notice.

# OPTIONS & FEATURES

- Outdoor Blinds provide great protection during every season, protecting from UV, wind, rain and dust.
- Outdoor Blinds are custom made to exact measures ensuring a perfect fit.
- Easy to operate, lightweight spring-loaded Outdoor Blinds are easy to push up or pull down. Let the blind go and it will stay in the chosen position.
- All Mesh Outdoor Blinds can be motorised. The same Louvretec remote control that operates your Opening Roof also operates your Outdoor Blinds.
- Most Outdoor Blinds incorporate a centrally mounted locking mechanism in the handle allowing the blinds to be locked when fully down.
- 'Ziptrack' style systems fit snug between the side frame and the skin. This provides a no rattle fit.
- Modern, heavy duty option Outdoor Blinds with mesh infills can now span up to 5.8m wide.
- Your Louvretec Dealer will advise how best to integrate the Outdoor Blind seamlessly into the Louvretec installation. Powder coat colour of your choice.



MOTORISED MESH SHADE BLINDS & OPENING ROOF



PROTECTION DURING EVERY SEASON



CHOOSE FROM A RANGE OF MESH DENSITY LEVELS OF 'OPEN-NESS'

MOTORISED OR HAND OPERATED

Controller and Sensor Options Refer Section 1 for range of options



SPRING ASSIST

Outdoor Blind will stay in chosen position.



PULL DOWN | PUSH UP

SURFACE FINISHING OPTIONS

A wide range of options are available.

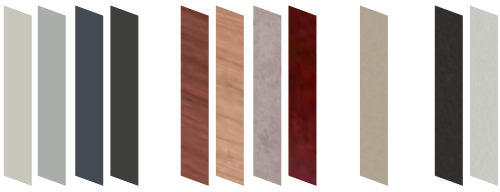



©Louvretec 2025 – All Rights Reserved. Technical specifications subject to change without notice.

# THE OUTDOOR BLIND INFILL OR SKIN:



MESH SHADE BLIND



A LARGE RANGE OF MESH DENSITY OPTIONS IS AVAILABLE

## Mesh Outdoor Blinds

By far the majority of Outdoor Blinds in residential installations choose Mesh skins.

- There is an ever increasing range of superb fiberglass based skin options available.
- Choose from a wide range of colours. Warranties differ between manufacturers - enquire when ordering.
- Choose from a wide range of mesh density options providing up to 99% UV block and 96% wind block.
- Outdoor Blinds over 3500mm width (depending on wind zone) must have mesh skins.
- Mesh Outdoor Blinds can span up to and in some cases over 6000mm depending on wind zone.
- Only Mesh Outdoor Blinds can be motorised.

# OR PVC



CLEAR PVC BLIND

## PVC Outdoor Blinds

- Louvretec supplied PVC Outdoor Blinds carry a one year workmanship and product warranty - excluding the PVC skins.
- PVC skins provide for maximum views and rain protection, however due to the unstable nature of PVC there is no manufacturers warranty available for the PVC skin itself.
- PVC Blinds cannot be motorised.
- PVC Blinds can span up to a maximum of 3500m depending on wind zone.
- PVC Blinds can react adversely to both heat and cold. Please discuss further with your Louvretec Dealer.

©Louvretec 2025 – All Rights Reserved. Technical specifications subject to change without notice.

# KEY OPTIONS & FEATURES AT A GLANCE

## Moveable Walls:

- Outdoor Blinds are a perfect fit with a Louvretec Room.
- With an Opening or fully Retractale Roof overhead, vertically retractable walls further enhance the total indoor/outdoor experience.

## Weather Protection when you need it:

- Sealed Mesh & Clear PVC outdoor blinds can be customed to provide the level of weather protection you require.
- Protect your space from wind, rain, glare and cold weather

## Environmentally Friendly:

- Protection from heat and UV in summer
- Helping to close in and capture warmth in winter - enjoy outdoor living all year round.

## Easy to Operate:

- Mesh blinds only can be motorized, as well as hand operable - simple individual or group control at the touch of a button.
- Clear PVC blinds are only offered as hand operable
- Hand operated push up / pull down is made easy with the use of an internally mounted spring balanced assist system.
- Lightweight and simple to use, the blind will stay firm in the designated position without rattling in the wind.







©Louvretec 2025 – All Rights Reserved. Technical specifications subject to change without notice.



# KEY OPTIONS & FEATURES AT A GLANCE

## Recommended Maximum Spans:

- The inclusion of extra heavy-duty bottom rails has enhanced achieveable spans.
- Mesh blinds up to 3500mm high can span up to, and in some cases over 5800mm depending on wind zones.
- Clear PVC blinds up to 3500mm high are recommended to span no more than 3500mm.
- Openings exceeding the above require either a fixed or removable mid-post.

## Pelmets for Louvretec Blinds:

- Unless stated otherwise by your Louvretec Dealer full aluminium pelmets are standard for all Mesh blinds.
- A half pelmet only, protecting the outside of the roll is recommended for Clear PVC blinds.



## Colour Options:

- A full range of powder coat colours ensure the perfect match for stand-alone or Louvretec Room installations

## Sunscreen Mesh:

- Is available in a wide range of colours and transparencies
- Up to 99% UV block
- Up to 96% wind block
- Allows airflow and reduces sun glare
- Easy to maintain, extremely durable and provides high degree of privacy during the day

©Louvretec 2025 – All Rights Reserved. Technical specifications subject to change without notice.

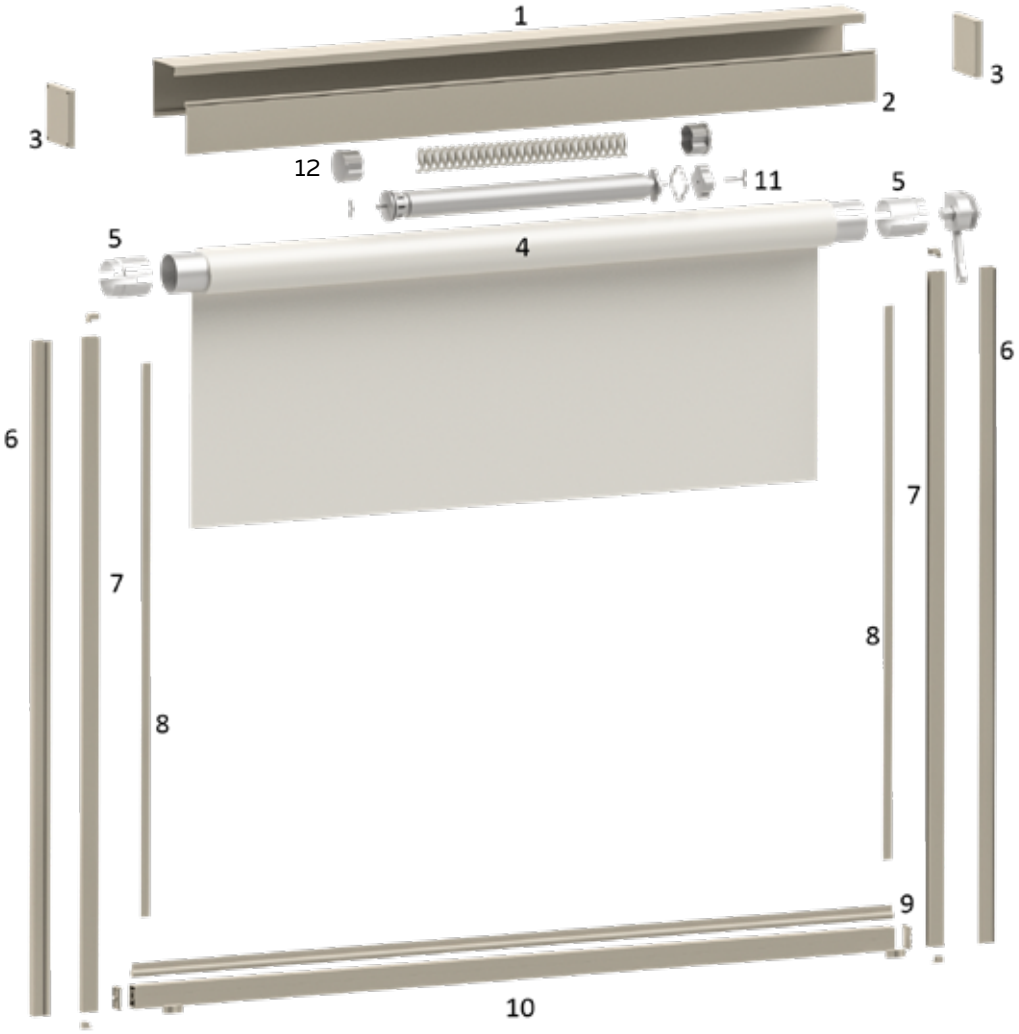


## Index

1. Rear headbox
2. Front headbox (Mesh blinds only - cannot be used on PVC Blinds)
3. End caps
4. Axle tube
5. Axle tube reducer
6. Outer side channel
7. Zip inner rail
8. Zip on blind skin
9. Bottom spline
10. Bottom rail
11. Motor option
12. Spring assist

## Outdoor Blinds Size guidelines

### MESH

Width up to 5800mm

Height up to 3500mm

### PVC

Width up to 3500mm

Height up to 3000mm

### HEADBOX

Sizes vary from 110m to 130m square

Typical Outdoor Blind showing motor, crank, or hand operable (spring assist) option



FILE: OUTDOOR BLINDS 6.12 DATE MODIFIED: 01/06/2024 SCALE:
www.louvretec.co.nz www.louvretec.com.au

©Louvretec 2025 - All Rights Reserved. Technical specifications subject to change without notice.

# LOUVRETEC PRODUCT WARRANTY

## OUTDOOR BLINDS

**The Louvretec range of products:**

All Louvretec branded products are designed and engineered in Australia & New Zealand by Louvretec to comply with relevant AS/NZS standards - refer to full Louvretec Engineering data Design Manual 2025 Section 13.

Louvretec has the most extensive range of outdoor sun shading/ outdoor living products available in Australasia, backed by a comprehensive network of Louvretec Dealers.

Most Louvretec products sold in Australia are made in Australia*

Most Louvretec products sold in New Zealand are made in New Zealand*

*Some specialised products may only be made in Australia or in NZ and are shipped between each country.







**The Authorised Louvretec Dealer Network:**

Your Louvretec product will have been supplied and installed by your local Authorised Louvretec Dealer. All Louvretec Dealerships are privately owned, and the same Louvretec Dealer who supplied your Louvretec will also service your Louvretec.

Your Louvretec product has been "Engineered for Life" and we are committed to ensuring that happens.

**Louvrecare:**

Preventative maintenance and valet. Regular scheduled servicing by a Louvrecare team has real benefits. Louvrecare can vary between Dealerships - consult your local Louvretec Dealer.

LouvreCare
PREVENTATIVE MAINTENANCE & VALET

*Engineered for Life*

LouvreTec®
OPENING & RETRACT ROOFS / SUN LOUVRES / SHUTTERS

©Louvretec 2025 – All Rights Reserved. Technical specifications subject to change without notice.

# LOUVRETEC PRODUCT WARRANTY

## OUTDOOR BLINDS

outdoor blinds
By Louvretec

| | |
|---|---|
| **warranty details** | All outdoor blinds installed by Louvretec , or an Authorised Louvretec Installer, is from date of invoice, fully warranted for the first year. Mesh blind skins are also covered by a five year manufacturer's warranty. Due to the unstable nature of PVC, there is no manufacturer's warranty available on the PVC skin itself. This warranty covers workmanship, and all componentry, motors, switches and electronics with all labour costs included. In addition, from year two to end of year five, a warranty replacement of parts only applies for all motors, switches and electronics. Labour costs excluded. (Excludes any wiring and electrical connections done by others). |
| **motorisation** | Louvretec exclusively uses Somfy motors. Somfy offers a 5 year warranty on all motors and electronics. Please contact your Louvretec Dealer or Somfy for a complete list of all terms and conditions. |
| **product materials** | All aluminium and extrusions used in Louvretec's systems are manufactured in an IS09002 quality assured environment to AS1866 & AS3902 standards. Marine grade T316 stainless steel is used for drive axles, with stainless steel componentry fixings being standard. Plastic injected moulded componentry is all UV stabilised. |
| **powdercoat finishes** | A wide range of exterior powder coat finishes are available. Duralloy or equivalent is the standard finish supplied unless stated otherwise and provides excellent resistance to weather and salt spray. This carries warranties of a maintainable service life of 25 years, film integrity of 10 years and colour integrity of 7 years. |
| **anodised finishes** | The current specifications re anodised aluminium range from 12-20-25 microns depth. The greater the microns the better the protection. With regular cleaning anosided material will retain its original integrity for no less than 10 years. |
| **fully engineered** | Our systems are designed to conform to New Zealand and Australian standards wind loadings. Full engineering details available on request. |
| **cleaning** | All blinds require regular cleaning and use to prolong their performance and to help prevent scratching and mould. A warm soapy water washdown is recommended using a car wash detergent. For the Louvretec Ziptrak system, the side guide channels and fabric in the side guide channel should be sprayed with a food grade silicone spray like CRC 808 every 3 months. To apply the lubricant, lower your blind all the way down and apply the silicone spray in the groove between the spline tape and the track, one on each side of the skin. Vuplex or Plexus sprays can be used to rejuvenate your clear PVC screen and reduce the accumulation of dust and other dirt. |
| **product description** | _____ |
| **louvrecare** | Louvrecare is a planned preventative maintenance and valet service designed to keep your Louvretec product clean and in good working order. Contact your Louvretec Dealer for full details. |
| **effective from** | Warranty effective from _____/_____/_____<br>Louvretec Representative _____ Print name _____<br>Site Adddress _____ |

LOUVRETEC NZ LTD
Head office: 23c Douglas Alexander Parade, Albany 0632, Auckland New Zealand
T +64 9 415 4949
E info@louvretec.co.nz
**www.louvretec.com**


©Louvretec 2025 – All Rights Reserved. Technical specifications subject to change without notice.

# LOUVRETEC PRODUCT WARRANTY

## OUTDOOR BLINDS

outdoor blinds
By Louvretec

GENERAL INFORMATION AND MAINTENANCE

Louvretec Outdoor Blinds come with a wide range of options. These options determine both the aesthetics and functionality of the blinds. Please take a moment to familiarise yourself with the following:

### options

There are two Outdoor Blind options, both with differing features and benefits: Mesh Blinds - for privacy & airflow. These Blinds are typically a composition pvc/polyester mesh, available in a range of colours with varying degrees of openness. PVC Blinds - for weather protection. PVC Blinds can be clear or tinted. Coloured PVC provides full privacy.

### operating systems

Hand operated - Blinds are pulled down or pushed up by a spring assisted axle.
Manual Gearbox - Blinds are operated by a gearbox and crank handle.
Motorised - Blinds are operated by a Somfy Tubular motor fitted within the axle, with hand held remote controls as standard. Note - it is not recommended to motorise PVC blinds.

### design choices & additional warranty info

- There is a wide range of Mesh fabrics and colours available
- PVC is available clear or tinted.
- Mesh fabrics vary with the percentage of openness and are best selected according to desired levels of privacy and wind protection.
- A full range of powdercoat colours are available for frame and headbox.
- Headboxes or pelmets are additional with Mesh blinds. They are not supplied with PVC blinds due to the potential, when retracted on hot days, to bunch and wrinkle around the axle.
- All Louvretec Outdoor Blinds carry a 1 year workmanship and installation warranty.
- Mesh blinds skins are also covered by a five year manufacturer's warranty.
- Due to the unstable nature of PVC there is no manufacturer's warranty available for the PVC skin itself.

### general information

LOUVRETEC OUTDOOR BLINDS ARE COVERED BY A ONE YEAR WORKMANSHIP + INSTALLATION WARRANTY.

SPARE PARTS AND REPAIRS ARE AVAILABLE FROM YOUR LOUVRETEC DEALERSHIP.

ONLY LOUVRETEC APPROVED PARTS ARE TO BE USED.

- In windy conditions, (winds greater than 30km/h) your Outdoor Blinds should be fully retracted all the way up. Moving blinds in windy conditions can be difficult. Wait for a break in the wind, then move your blinds, pushing on the skin with your hand against the wind - in order to free it between the tracks.
- If you're going away, retract the blind up to the top position (fully retracted) to keep it safe in the event of bad weather.
- All blinds require regular cleaning and use to prolong their performance and to help prevent scratching and mould. Use warm soapy water & wash down using household grade mild detergent.
- For the Louvretec Ziptrack system, the fabric and side guide channels should be sprayed with a food grade silicone spray like CRC 808 every 3 months. To apply the lubricant, lower your blind all the way down, and apply the silicone spray in the groove between the spline tape and the track, on each side of the skin.
- For our Ziptrack system, manual hand operated blinds should be operated from the CENTRE of the bottom rail, for even rolling of the blind's skin on the top tube. Motorised blinds should be supervised while in motion.
- Sagging as a result of the blinds own weight will occur. This is not a fault in the system and is unavoidable.
- Once a week fully extend your blind to even out the fabric and let it breathe. Leave it down all day to let it retain its shape.

LOUVRETEC NZ LTD
Head office: 23c Douglas Alexander Parade, Albany 0632, Auckland New Zealand
T +64 9 415 4949
E info@louvretec.co.nz
www.louvretec.com

©Louvretec 2025 – All Rights Reserved. Technical specifications subject to change without notice.

# LOUVRETEC PRODUCT WARRANTY

## OUTDOOR BLINDS

outdoor blinds
By Louvretec

### summary of standard maintenance required by owner

- Visually check the state of the fabric at least twice a year - in the spring before summer use and in the autumn before winter.
- Make sure the fabric is clean and that there is no mould caused by dust or other materials before the summer.
- Lubricate the moving parts with silicone lubricant every 3-6 months.
- Clean the fabric, if required, using a damp sponge or cloth soaked in warm water and mild car wash detergent. Allow fabric to dry before retracting.
- DO NOT use solvents, ammonia or hydrocarbons.
- DO NOT use alkaline products on PVC fabrics as they cause opaqueness and decrease transparency.

### PVC Blinds

- PVC will expand and shrink depending on ambient temperatures. When warm, the PVC is soft and pliable. When cold the blind will tighten up and the PVC will be less pliable. This may affect the ease of movement of the screen.
- In hot weather, leave your blind down at night and operate it during the day to stop it burning on the tube.
- The PVC stiffness in cold weather is not a problem with a manually operated blind, but in a motorised blind, the weighted bottom rail cannot always overcome the PVC stiffness.
- Avoid rolling up your blind when it is wet. This will result in the clear PVC blind having a milky appearance (this should dissipate naturally when the screen is rolled down in warmer conditions and with sun-light), and accelerate the growth of mould or mildew on PVC blinds.
- VuPlex or Plexus Sprays can be used to rejuvenate your clear PVC screen and reduce the accumulation of dust and other dirt.
- Crumpling or wrinkling will occur with PVC blinds, this is very normal due to it's volatile nature.

### Mesh Blinds

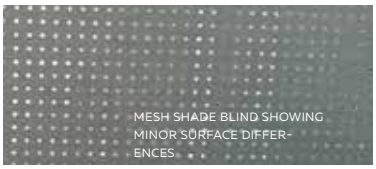

MESH SHADE BLIND SHOWING MINOR SURFACE DIFFERENCES



PVC BLINDS SHOWING SLIGHT CRUMPLING



PVC BLINDS SHOWING SLIGHT CRUMPLING

- Mesh/Fabric materials as with other fabrics can occasionally have small knots, spots of colour, short cord breaks, irregular runs of thread or minor differences in the surface of uniformity or colour and are unavoidable.
- Lighter coloured fabrics will allow more light to pass through than darker coloured fabrics. This is a result of light being absorbed by the darker coloured fabrics.
- Fabric with a stripe or pattern may experience crumpling along the bands of colour. If there is a stripe or pattern on your fabric like the example below, specify to Louvretec how you want the pattern to run (vertical or horizontal) as there is an aesthetic consideration to this.
- Given the high level of pollutants in our atmosphere which lead to acid rain, if the blind is installed near to road, air ducts, forest trees with risk of dripping resin and leaves, and even though they are treated with anti-mould, if they are not frequently cleaned the fabrics can be attacked by micro organisms which make it impossible to clean after.
- Cobweb effect can form when the fabric is being made up, especially in light colours these creases become darker marks, however they do not affect the quality of the blind.
- Waves can form near to the sewing and side edges due to the double thickness of the fabric.
- If the blind is exposed to continuous strong winds, it may show signs of wear, fraying and abrasion.

**The above are not product defects and are not covered by the warranty.**

LOUVRETEC NZ LTD
Head office: 23c Douglas Alexander Parade, Albany 0632, Auckland New Zealand
T +64 9 415 4949
E info@louvretec.co.nz
**www.louvretec.com**



©Louvretec 2025 – All Rights Reserved. Technical specifications subject to change without notice.

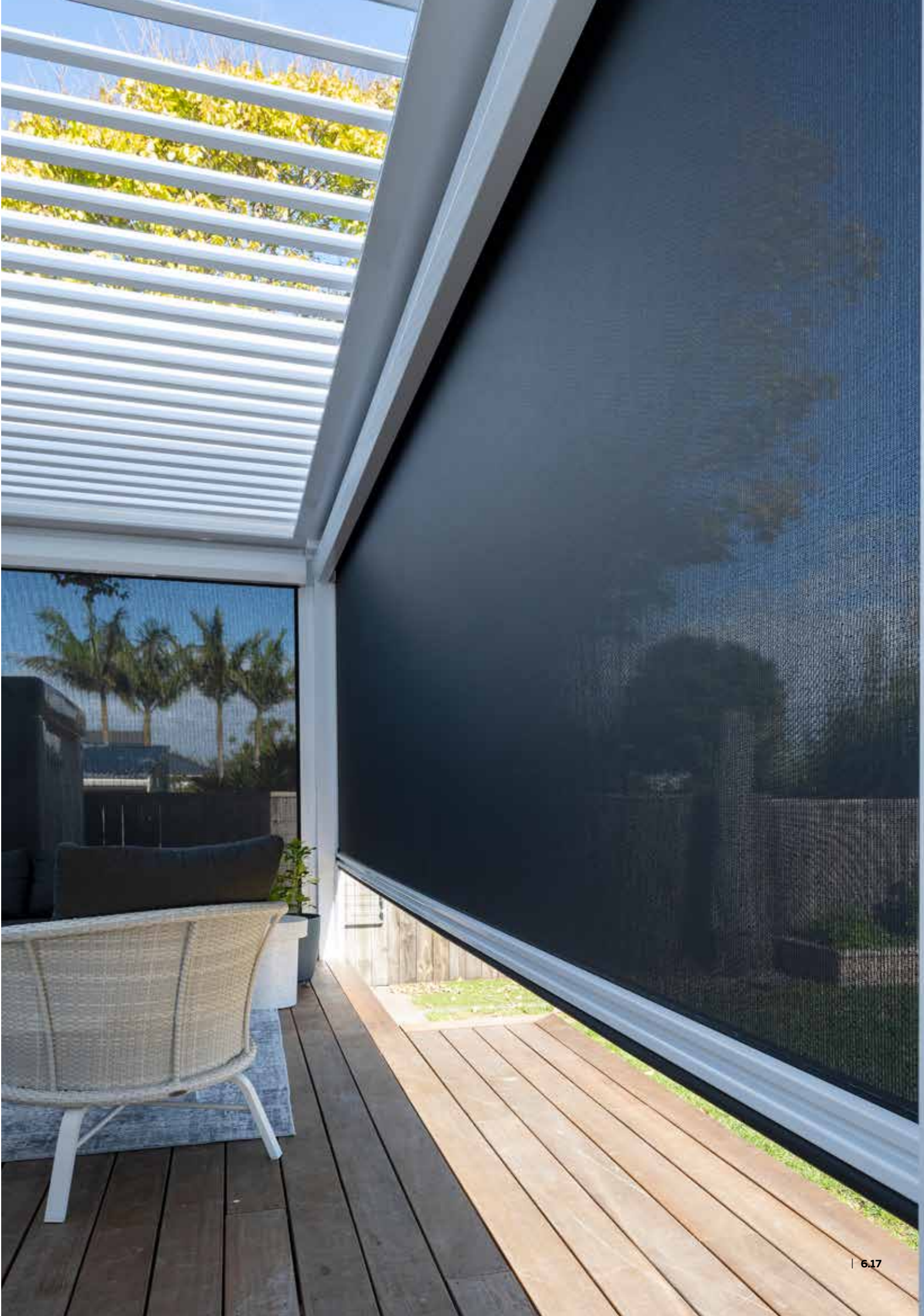

# the louvretec room


| | |
|---|---|
| Gallery and Overview | 9.02 - 9.05 |
| Louvretec Room options | 9.06 - 9.07 |
| Step 1 Decking | 9.08 |
| Step 2 Structural Frames | 9.09 |
| Step 3 Opening Roof or Retract | 9.10 - 9.11 |
| Step 4 Infill Sides | 9.12 - 9.14 |
| Step 5 Finishing Touches: Lighting / Heating | 9.15 - 9.16 |
| Louvretec Room Warranty | 9.17 - 9.18 |


©Louvretec 2025 – All Rights Reserved. Technical specifications subject to change without notice.






©Louvretec 2025 – All Rights Reserved. Technical specifications subject to change without notice.

# THE LOUVRETEC ROOM



©Louvretec 2025 – All Rights Reserved. Technical specifications subject to change without notice.

# THE LOUVRETEC ROOM **GALLERY**


1.


2.


3.


4.

1. OPENING ROOF AND 135 HI SPAN LOUVRES 2. CLEAR PVC BLINDS 3. MESH BLINDS 4. SLIDING SHUTTERS



©Louvretec 2025 – All Rights Reserved. Technical specifications subject to change without notice.









# THE LOUVRETEC ROOM

## "The heart of the home"

*In modern architecture today everything has a flow to the oustide.....*

Which is wonderful, however the outside is always changing and isn't always that hospitable.

A Louvretec Room genuinely gives you options to make the most out of whatever is going on outside all year round.

Roofs and walls can be opened, closed, retracted.....

Walls can be glass, mesh, louvres in many configurations - all of which can slide or raise should you so wish.

Lighting and heating can be added - all operable from a single hand held wireless remote controller

Be creative, have some fun, look and consider how this would work at your place.

## 5 BASIC STEPS

1. Decks: You will need a deck

2. Structural Frame: Add custom Louvretec engineered beams and posts

3. Opening Roof: Now you can choose between Opening only or fully Retractable

4. Infill options: Choose from Slidetec Frameless Glass, Outdoor Blinds or Louvred Shutters

5. The finishing touches: Add Lighting or Heating to suit

Please turn over for an easy-to-follow step x step guide.

©Louvretec 2025 – All Rights Reserved. Technical specifications subject to change without notice.

the louvretec room

# DECKS: STRUCTURAL FRAME | OPENING OR RETRACT ROOF



1.DECK



2.STRUCTURAL LOUVRETEC FRAME



3. OPENING ROOF



3. RETRACT ROOF






©Louvretec 2025 – All Rights Reserved. Technical specifications subject to change without notice.

# INFILL OPTIONS | FINISHING TOUCHES






4.INFILL OPTIONS:
SLIDETEC FRAMELESS GLASS SLIDERS



5.INFILL OPTIONS: OUTDOOR BLINDS



6.INFILL OPTIONS:
LOUVRE SHUTTERS AND PANELS




7. FINISHING TOUCHES:
LIGHTING AND HEATING

©Louvretec 2025 – All Rights Reserved. Technical specifications subject to change without notice.

# STEP 1 DECKING

Most Louvretec Dealers don't do decks (so make sure you check this first with your local Louvretec Dealer) - this is the only part of the five steps not undertaken by Louvretec. You may have an existing deck, or the deck may be part of your new home build.

Decks are typically timber or composite such as eco-deck or concrete with tiled finish. Deck construction is critical as it forms the foundation to support your Louvretec Room structure. For decks under construction, discuss layout and fixing options with Louvretec.

## TIMBER DECKING



Make sure your deck complies with council requirements.

On existing decks additional structural support may be required. Posts can sit outside of deck or within deck structure with decking cut around post.

If the structural posts are fitting directly to the deck ensure there is adequate solid timber fixing at post connection points. Alternatively extend the posts to ground level and fix to a suitably engineered concrete pad.

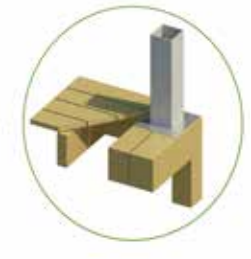

POSTS SITTING DIRECTLY ON TO DECK

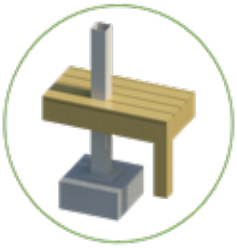

POSTS PROJECTED THROUGH DECK ON TO CONCRETE PAD

## CONCRETE DECKING

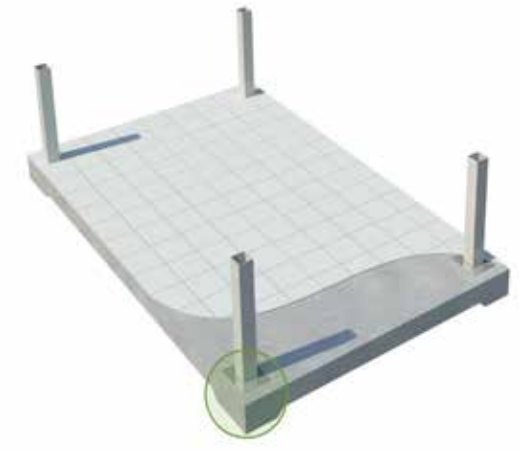

A typical 100mm concreted reinforced patio requires a concrete foundation under the post fixing points.  Tiles or decorative surfaces can be laid to cover the base plate.

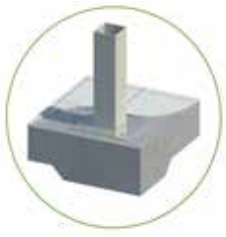

FIXING TO CONCRETE



©Louvretec 2025 – All Rights Reserved. Technical specifications subject to change without notice.

louvretec structural
Frames | Posts | Connections



# STEP 2 THE LOUVRETEC STRUCTURAL FRAME

- Louvretec offers a fully engineered structural aluminium frame system specifically designed for Outdoor Rooms.
- Beams & posts are custom designed to be structurally compliant to the specific wind zone.
- Louvretec structural frames provide for clean aesthetically pleasing lines and with regular cleaning, are virtually maintenance free. They are also designed to incorporate wall in-fills such as outdoor blinds, frameless sliding glass doors as well as a range of louvre panel infills.



TYPICAL FRAME LAYOUTS

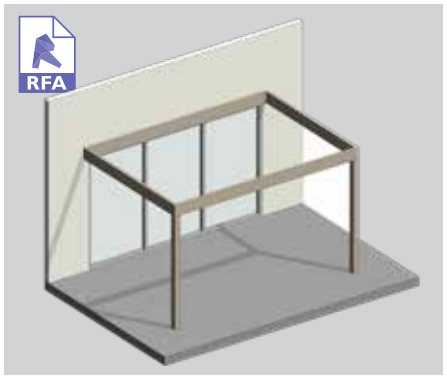


SIMPLY SUPPORTED

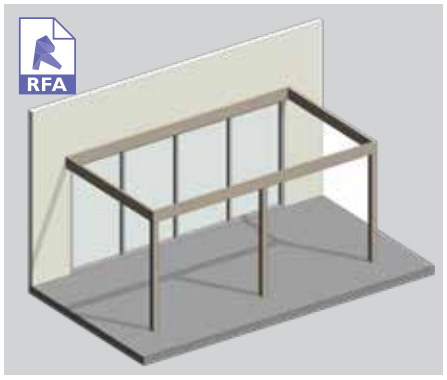


LENGTH EXTENDED - CONTINUOUS SPAN

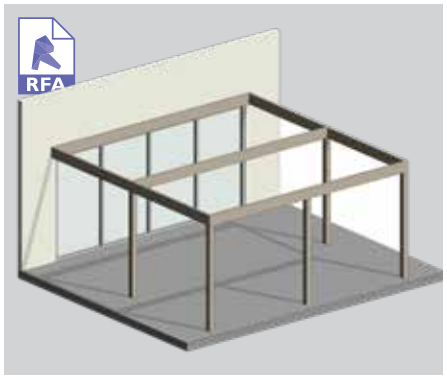


WIDTH EXTENDED

CONTACT YOUR NEAREST LOUVRETEC DEALER TO DISCUSS OPTIONS BEST SUITED FOR YOUR INSTALLATION

©Louvretec 2025 – All Rights Reserved. Technical specifications subject to change without notice.

opening roofs
By Louvretec

# STEP 3 1 OF 2 OPENING ROOF OPTION

## Opening Roof

We have a range of six different Opening Roofs to choose from. Offering a range of design styles, blade sizes and even a Translucent choice. Factors such as wind zones, and blade spans must be considered, with bigger spans and higher wind speeds requiring heavy duty blades.

Refer to Section 13 for Engineering Reports covering not only choice of blade but also structural frame and post sizes. A visit to your nearest Louvretec showroom is strongly recommended to see the actual range of options before deciding

REFER SECTION 2 FOR FULL DETAILS



OPENING ROOF OPTIONS

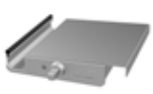

180/30 SLIMLINE ROOF
PGS 2.19 - 2.22



200/35 SLIMLINE ROOF
PGS 2.23 - 2.26



220/35 SLIMLINE ROOF (RETRACT COMPATIBLE)
PGS 2.27 - 2.30



220/45 ALPINE ROOF (RETRACT COMPATIBLE)
PGS 2.31 - 2.34



200 SUBURBAN
PGS 2.35 - 2.38 &
SUBURBAN SOLAR PG 2.14



270 TRANSLUCENT ROOF
PGS 2.39 - 2.42



©Louvretec 2025 – All Rights Reserved. Technical specifications subject to change without notice.

louvretec retract
Retract Roofs

# STEP 3 2 OF 2 RETRACT ROOF OPTION

## Retract Roof

Our new Somfy powered Retract Roof is also an option to consider. Blades can stack either all to one end or evenly to both ends giving clear open spaces above. Two new 220 Retract roof louvres have been designed that incorporates a number of innovative ideas.

Contact your Louvretec Dealer for full details. Truly putting another dimension into indoor/outdoor living

REFER SECTION 3 FOR FULL DETAILS



RETRACT ROOF OPTIONS



220/35 SLIMLINE ROOF



220/45 ALPINE ROOF

©Louvretec 2025 – All Rights Reserved. Technical specifications subject to change without notice.

slidetec
*By Louvretec*

# STEP 4 1 OF 3 SLIDETEC FRAMELESS GLASS SLIDING PANELS

## Slidetec Frameless Glass Sliding Doors, Windows & Fixed Panels

Slidetec has been designed, developed and manufactured by Louvretec specifically to meet the harsh demands of the Australian and NZ climate.

Frameless Glass sliding Doors and Windows are an ideal infill option for a Louvretec Outdoor Room, providing wonderful protection without compromising your view.

REFER SECTION 5 FOR FULL DETAILS



CHOOSE FROM A WIDE RANGE OF PANEL CONFIGURATIONS

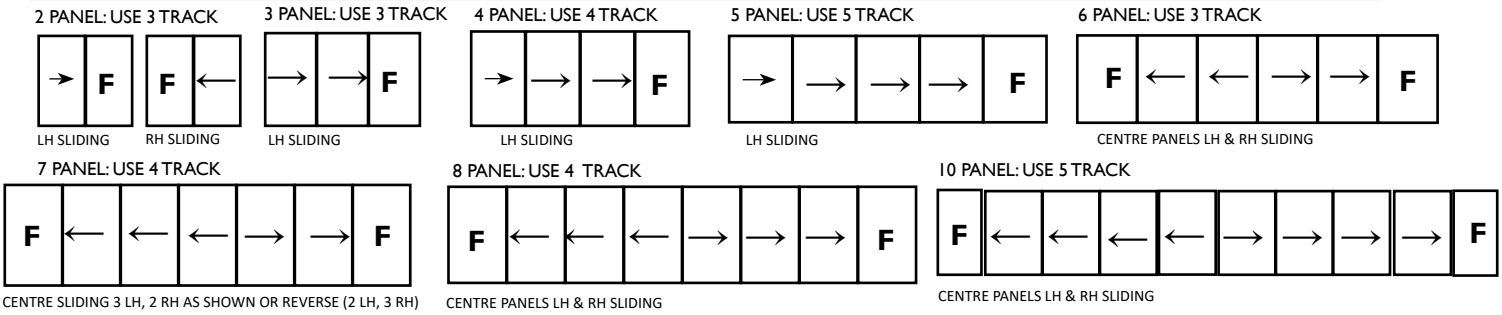




©Louvretec 2025 – All Rights Reserved. Technical specifications subject to change without notice.

outdoor blinds
By Louvretec

# STEP 4 2 OF 3 OUTDOOR BLINDS

## Outdoor Blinds

Outdoor Blinds are a popular option when considering closing in a wall of a Louvretec Room.

Outdoor Blinds provide great protection during every season, protecting from UV, wind, rain and dust.

Easy to operate, either pull down/push up, or motorised, speak to your local Louvretec Dealer regarding the best custom-made option for your installation.

REFER SECTION 6 FOR FULL DETAILS



A LARGE RANGE OF MESH DENSITY AND MESH COLOUR OPTIONS ARE AVAILABLE



©Louvretec 2025 – All Rights Reserved. Technical specifications subject to change without notice.

sun louvres
By Louvretec

# STEP 4 3 OF 3 LOUVRE SHUTTERS

## Louvre Shutters

Louvretec has a wide range of Operable and Fixed Shutters available, ideally suited for closing in Outdoor Room walls.

There is a range of Airfoil and Rectangular shaped louvre blades, ranging from 90mm to 150mm that fit within Fixed panels, Sliding or Bi-Folding panels.

Larger Fixed, Hand Operated or Motorised louvres ranging from 120mm to 200mm can also be incorporated into half or full walls providing aesthetically pleasing fit for purpose design options.

REFER SECTIONS 10 & 12 FOR FULL DETAILS



CHOOSE FROM A RANGE OF SLIDING / BIFOLDING LOUVRED DOORS OR WINDOWS









©Louvretec 2025 – All Rights Reserved. Technical specifications subject to change without notice.

# STEP 5 1 OF 2 LIGHTING

## Lighting

Louvretec has developed the Light-tec custom range of premium lighting options, specifically to enhance a Louvretec Room, but equally as well suited for any Louvretec installation. Choose from three Light-tec options:

1. Continuous LED Pure Flow strip lighting to inside face of gutter. This popular option shines diffused light to the underside of the louvre blade.

2. Continuous LED Neon strip lighting to the front face of gutter. The ultra slim strip sits flush with the front face of the lighting clip providing seamless, continuous lighting to the inside of the Louvretec Room.

3. Underframe downlights

Discuss options that can be custom fitted to your Outdoor Room with your Louvretec Dealer.
REFER SECTION 7 FOR FULL DETAILS



3 SIMPLE LIGHTING OPTIONS



INSIDE FACE GUTTER



OUTSIDE FACE GUTTER



DOWNLIGHTS

©Louvretec 2025 – All Rights Reserved. Technical specifications subject to change without notice.

HEATING

# STEP 5 2 OF 2 FINISHING TOUCHES

## Heating

Heaters are a popular addition to an Outdoor Room. There is a wide range of heater options suitable for outdoor use.

Most Louvretec Dealers offer a suitable heater option.

In NZ, Louvretec offer Bromic infrared electric heaters as part of our Outdoor Room Package.

REFER SECTION 8 FOR FULL DETAILS



## BROMIC HEATERS

· Award winning design made of high quality stainless steel

· Superior technology allowing the heater to spread radiant heat evenly across a large area creating ideal comfort

· With a wide range of sizes available, find the ideal heater to suit your outdoor space

· Black and white colours available

· With a wide array of mounting options, Bromic offers solutions to compliment any decor and provide functionality for ambiance and comfort



©Louvretec 2025 – All Rights Reserved. Technical specifications subject to change without notice.

# LOUVRETEC PRODUCT WARRANTY

## OPENING ROOFS - SUN LOUVRES - SHUTTERS

**The Louvretec range of products:**

All Louvretec branded products are designed and engineered in Australia & New Zealand by Louvretec to comply with relevant AS/NZS standards - refer to full Louvretec Engineering data Design Manual 2025 Section 13.

Louvretec has the most extensive range of outdoor sun shading/ outdoor living products available in Australasia, backed by a comprehensive network of Louvretec Dealers.

Most Louvretec products sold in Australia are made in Australia*

Most Louvretec products sold in New Zealand are made in New Zealand*

*Some specialised products may only be made in Australia or in NZ and are shipped between each country.

**The Authorised Louvretec Dealer Network:**

Your Louvretec product will have been supplied and installed by your local Authorised Louvretec Dealer. All Louvretec Dealerships are privately owned, and the same Louvretec Dealer who supplied your Louvretec will also service your Louvretec.

Your Louvretec product has been "Engineered for Life" and we are committed to ensuring that happens.

**Louvrecare:**

Preventative maintenance and valet. Regular scheduled servicing by a Louvrecare team has real benefits. Louvrecare can vary between Dealerships - consult your local Louvretec Dealer.









*Engineered for Life*

LouvreTec®
OPENING & RETRACT ROOFS / SUN LOUVRES / SHUTTERS

©Louvretec 2025 – All Rights Reserved. Technical specifications subject to change without notice.

# LOUVRETEC PRODUCT WARRANTY

## OPENING ROOFS - SUN LOUVRES - SHUTTERS

| | |
|---|---|
| warranty details | All product installed by Louvretec (excluding Outoor Blinds - please refer separate warranty for this) , or an Authorised Louvretec Installer, is from date of invoice, fully warranted for the first two years. This warranty covers workmanship, louvres and all componentry, motors, switches and electronics with all labour costs included. In addition, from year two to end of year five, a warranty replacement of parts only applies for all motors, switches and electronics. Labour costs excluded. (Excludes any wiring and electrical connections done by others). |
| motorisation | Louvretec exclusively uses Somfy motors, switches and electronics. Somfy offers a 5-year warranty on all motors and electronics. Please contact Louvretec NZ or Somfy for a complete list of all terms and conditions. |
| product materials | All aluminium louvres and extrusions used in Louvretec's systems are manufactured in an ISO9002 quality assured environment to AS1866 & AS3902 standards. Marine grade T316 stainless steel is used for drive axles, with stainless steel componentry fixings being standard. Plastic injected moulded componentry is all UV stabilised |
| powdercoat finishes | A wide range of exterior powder coat finishes are available. Duralloy or equivalent is the standard finish supplied unless stated otherwise and this carries a 10 year film and colour integrity warranty as per the Dulux Powder and Industrial Coatings Warranty. If your project has used the Duratec powdercoat range please refer to the Dulux Powder and Industrial Coatings Warranty wording. |
| anodised finishes | The current specifications re anodised aluminium range from 12-20-25 microns depth. The greater the microns the better the protection. With regular cleaning anosided material will retain its original integrity for no less than 10 years. |
| fully engineered | Our louvre systems are designed to conform to New Zealand and Australian standards wind loadings. Full engineering details available on request. |
| cleaning | Periodic cleaning is essential to remove dirt, grime and accumulated salt deposits from both powder coated and anodised surfaces. Three steps for cleaning are:<br>1 Carefully remove any loose deposits with a wet sponge.<br>2 Use a soft non abrasive brush and a mild car cleaning detergent solution to remove dust, salt and other deposits.<br>3 Rinse off with clean fresh water. |
| product description | _____ |
| louvrecare | Louvrecare is a planned preventative maintenance and valet service designed to keep your Louvretec product clean and in good working order. Contact your Louvretec Dealer for full details. |
| effective from | Warranty effective from _____/_____/_____<br>Louvretec Representative _____ Print name _____<br>Site Adddress _____ |

LOUVRETEC NZ LTD
Head office: 23c Douglas Alexander Parade, Albany 0632, Auckland New Zealand
T +64 9 415 4949
E info@louvretec.co.nz
www.louvretec.com



©Louvretec 2025 – All Rights Reserved. Technical specifications subject to change without notice.



# sun louvres

By Louvretec


| | |
|---|---|
| Gallery and Overview | 10.02 - 10.05 |
| Airfoil Sun Louvres - Spans | 10.06 |
| Rectangular Sun Louvres - Spans | 10.07 |
| RL Rectangular Sun Louvres - Spans | 10.08 |


***Each Sun Louvre Application has their own section as follows:***


| | |
|---|---|
| Kiss Pivot System (Hand Operable Louvres) | 10.1.01-10.1.13 |
| Spiral Pivot System (Motorised & Hand Op.) | 10.2.01-10.2.45 |
| Maxi Drive (Motorised 300mm Maxi Louvre) | 10.3.01-10.3.07 |
| End Fixed Louvre System | 10.4.01-10.4.49 |
| Bracket Fixed Louvre System | 10.5.01-10.5.43 |


©Louvretec 2025 – All Rights Reserved. Technical specifications subject to change without notice.





©Louvretec 2025 – All Rights Reserved. Technical specifications subject to change without notice.

# SUN LOUVRES




©Louvretec 2025 – All Rights Reserved. Technical specifications subject to change without notice.


1.


2.


3.


4.

1. SPIRAL MOTORISED 135 HI SPAN PANEL 2. KISS HAND ADJUSTABLE 90MM MIDI SHUTTERS 3. SPIRAL MOTORISED 200 FLUSH PANEL
4. BRACKET FIXED 150 MIDI LOUVRES



©Louvretec 2025 – All Rights Reserved. Technical specifications subject to change without notice.



STYLE & SUN CONTROL



OUTDOOR LIVING YEAR ROUND



LOUVRE CHIMNEY SURROUND, FIXED LOUVRE PANELS & COASTAL SHUTTERS FOR PRIVACY, STYLE & WEATHER PROTECTION

# SUN LOURES OVERVIEW

## Style with function

Sun Louvres form our most varied and versatile product range.

## Many options

All Louvretec Sun Louvre systems have been beautifully designed to provide an unparalleled degree of choice. Their uses are many and varied including;

- sun protection
- shelter
- privacy control
- style giving a dramatic effect
- for both Residential & Commercial projects

## Available in an Airfoil or Rectangular shape with functionality choices

Due to the range of louvre blade sizes, three different types of motorisation or hand operable systems are available:

1. **KISS Pivot system (Hand operable)** - Blades: 90mm to 150mm
   Section 10.1
2. **Spiral Pivot system (Motorised)** - Blades: 120mm to 200mm
   Section 10.2
3. **Maxi-Drive system (Motorised)** - Blade: 300mm
   Section 10.3

Additionally, all Louvretec louvres can be:

4. **End Fixed** - Blades: All
   Section 10.4
5. **Bracket Fixed** - Blades: All
   Section 10.5

Plus, for a Retractable Louvre option refer to:

**Retract Sun Louvre system** - At time of printing this product is under design & development. See Section 11 & contact your local Louvretec Dealer for more info.

All options are fully engineered and certified for Residential and Commercial use.

## Need more Sun Louvre systems/applications info?

For specific information regarding louvre blade & application/system choice, please refer to one of the five Sun Louvre applications (listed above) in Sun Louvres Sections 10.1 to 10.5 of this Design Manual.

©Louvretec 2025 – All Rights Reserved. Technical specifications subject to change without notice.

MINIMUM - MAXIMUM BLADE SPANS AT A GLANCE AS DETERMINED BY WIND SPEED. REFER TO SECTION 13 ENGINEERING REPORTS FOR FULL DETAILS ON BLADE SPANS.

EXTRA HIGH WIND SPEED 198KM/H 55M/S

LOW WIND SPEED 115KM/H 32M/S

# AIRFOIL SUN LOUVRES

| 7 DIFFERENT STYLES | MAXIMUM SPANS | OPTIONS AVAILABLE |
|---|---|---|
|  90 MIDI LOUVRE | 1400MM EX HIGH<br>2000MM LOW | KISS PIVOT, END FIXED, BRACKET FIXED |
|  150 MIDI LOUVRE | 1900MM EX HIGH<br>2750MM LOW | SPIRAL PIVOT, KISS PIVOT, END FIXED, BRACKET FIXED |
|  120 AIRFOIL LOUVRE | 1600MM EX HIGH<br>2300MM LOW | SPIRAL PIVOT, END FIXED, BRACKET FIXED |
|  180 AIRFOIL LOUVRE | 2050MM EX HIGH<br>2950MM LOW | SPIRAL PIVOT, END FIXED, BRACKET FIXED |
|  200 MAXI LOUVRE | 2350MM EX HIGH<br>3700MM LOW | SPIRAL PIVOT, END FIXED, BRACKET FIXED |
|  300 MAXI LOUVRE | 3350MM EX HIGH<br>4800MM LOW | MAXI DRIVE, END FIXED, BRACKET FIXED |
|  600 MAXI LOUVRE | 3700MM EX HIGH<br>5800MM LOW | END FIXED, BRACKET FIXED |



©Louvretec 2025 – All Rights Reserved. Technical specifications subject to change without notice.

MINIMUM – MAXIMUM BLADE SPANS AT A GLANCE AS DETERMINED BY WIND SPEED. REFER TO SECTION 13 ENGINEERING REPORTS FOR FULL DETAILS ON BLADE SPANS.

EXTRA HIGH WIND SPEED 198KM/H 55M/S

LOW WIND SPEED 115KM/H 32M/S

# RECTANGULAR SUN LOUVRES

| 10 RECTANGULAR LOUVRES | MAXIMUM SPANS | OPTIONS AVAILABLE |
|---|---|---|
|  120 FLUSH MINI | 1750MM – 2500MM EX HIGH / LOW | SPIRAL PIVOT; END FIXED; BRACKET FIXED |
|  180 FLUSH MIDI | 2250MM – 3350 MM EX HIGH / LOW | SPIRAL PIVOT; END FIXED; BRACKET FIXED |
|  200 FLUSH MAXI | 2250MM – 3350MM EX HIGH / LOW | SPIRAL PIVOT; END FIXED; BRACKET FIXED |
|  125 WEATHERBOARD | 1750MM – 2500MM EX HIGH / LOW | SPIRAL PIVOT; END FIXED; BRACKET FIXED |
|  180 WEATHERBOARD | 2100MM – 3050MM EX HIGH / LOW | SPIRAL PIVOT; END FIXED; BRACKET FIXED |
|  150 HELENA BAY | 2050MM – 3050MM EX HIGH / LOW | END FIXED; BRACKET FIXED |
|  95 BELLA VISTA | 1450MM – 2100MM EX HIGH / LOW | KISS PIVOT; END FIXED |
|  95 BELLA VISTA HEAVY | 1900MM – 2800MM EX HIGH / LOW | KISS PIVOT; END FIXED |
|  135 HI SPAN LOUVRE | 3500MM – 4400MM EX HIGH / LOW | SPIRAL PIVOT; END FIXED |
|  165 HI SPAN LOUVRE | 3500MM – 4500MM EX HIGH / LOW | SPIRAL PIVOT; END FIXED |
|  135 HI SPAN BALUSTRADE LOUVRE | 3000MM – 3000MM EX HIGH / LOW | SPIRAL PIVOT; END FIXED |
|  165 HI SPAN BALUSTRADE LOUVRE | 3300MM – 3300MM EX HIGH / LOW | SPIRAL PIVOT; END FIXED |

©Louvretec 2025 – All Rights Reserved. Technical specifications subject to change without notice.

MINIMUM - MAXIMUM BLADE SPANS AT A GLANCE AS DETERMINED BY WIND SPEED. REFER TO SECTION 13 ENGINEERING REPORTS FOR FULL DETAILS ON BLADE SPANS.

EXTRA HIGH WIND SPEED 198KM/H 55M/S

LOW WIND SPEED 115KM/H 32M/S

# RL RECTANGULAR SUN LOUVRES

| 6 DIFFERENT STYLES | MAXIMUM SPANS | OPTIONS AVAILABLE |
|---|---|---|
| 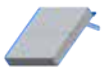 RL 300 SQUARE | 4050MM EX HIGH<br>5800MM LOW | MAXI DRIVE; END FIXED; BRACKET FIXED |
| 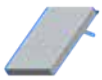 RL 450 SQUARE | 4050MM EX HIGH<br>5800MM LOW | MAXI DRIVE; END FIXED; BRACKET FIXED |
|  RL 600 SQUARE | 4050MM EX HIGH<br>5800MM LOW | END FIXED; BRACKET FIXED |
|  RL 300 MITRE | 4050MM EX HIGH<br>5800MM LOW | END FIXED; BRACKET FIXED |
|  RL 450 MITRE | 4050MM EX HIGH<br>5800MM LOW | END FIXED; BRACKET FIXED |
|  RL 600 MITRE | 4050MM EX HIGH<br>5800MM LOW | END FIXED; BRACKET FIXED |



©Louvretec 2025 – All Rights Reserved. Technical specifications subject to change without notice.

**NOTES**

©Louvretec 2025 – All Rights Reserved. Technical specifications subject to change without notice.

sun louvres
By Louvretec

## KISS PIVOT SUN LOUVRES

KISSX PIVOT SYSTEM


| | |
|---|---|
| Gallery | 10.1.02 |
| KISS Pivot Louvre Range | 10.1.03 |
| KISS Pivot Overview | 10.1.04 |
| KISS Pivot 90mm and 150mm louvre | 10.1.05 |
| Blade Specifications: 90mm + 150mm | 10.1.06-10.1.07 |
| Technical Details 90mm + 150mm | 10.1.08 |
| KISS Pivot 95mm Bella Vista + Bella Vista Heavy louvres | 10.1.09 |
| Blade Specifications: 95mm Bella Vista & 95 Bella Vista Heavy Louvres | 10.1.10-10.1.11 |
| Technical Details 95mm Bella Vista louvres | 10.1.12 |


©Louvretec 2025 – All Rights Reserved. Technical specifications subject to change without notice.


1.


2.


3.


4.

1. 95MM BELLA VISTA LOUVRE 2. 150MM KISS PIVOT LOUVRE, DARK RIVERWOOD 3. 90MM LOUVRE BLADE SHUTTERS 4. 95MM BELLA VISTA HEAVY SHUTTERS



©Louvretec 2025 – All Rights Reserved. Technical specifications subject to change without notice.

MINIMUM - MAXIMUM BLADE SPANS AT A GLANCE AS DETERMINED BY WIND SPEED. REFER TO SECTION 13 ENGINEERING REPORTS FOR FULL DETAILS ON BLADE SPANS.

EXTRA HIGH WIND SPEED 198KM/H 55M/S

LOW WIND SPEED 115KM/H 32M/S

# THE LOUVRETEC RANGE OF KISS PIVOT SUN LOUVRES

## Kiss Pivot System

| ***TYPE/COLLECTION*** | ***LOUVRE STYLE*** | ***MAXIMUM SPANS*** |
|---|---|---|
| AIRFOIL LOUVRE BLADES |  90MM MIDI LOUVRE | 1400MM EX HIGH<br>2000MM LOW |
| |  150MM MIDI LOUVRE | 1900MM EX HIGH<br>2750MM LOW |
| RECTANGULAR LOUVRE BLADES |  95MM BELLA VISTA | 1450MM EX HIGH<br>2100MM LOW |
| |  95MM BELLA VISTA HEAVY | 1900MM EX HIGH<br>2800MM LOW |

## Proven reliability

KISS Pivot sun louvres feature a clean uncluttered style easily hand-operated by full length snug fitting double drive-arms.



©Louvretec 2025 – All Rights Reserved. Technical specifications subject to change without notice.

# DRIVE SYSTEM: KISS PIVOT

## Kiss Pivot Sun Louvres

Choose from two Airfoil and two Rectangular louvre blades.



90MM SLIDING SHUTTERS USING KISS PIVOT DRIVE SYSTEM



KISS PIVOT - 95MM BELLA VISTA RECTANGULAR LOUVRE PANEL

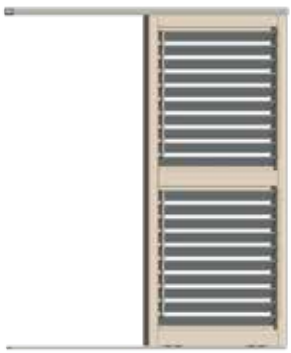

KISS PIVOT LOUVRES IN SLIDING PANEL

## Ease of Operation

- The KISS Pivot system is elegant and simple, tried and true and well proven in the market place.
- An easy to operate, well proven Sun Louvre pivot system.
- Operates off double drive-arms that can be locked closed or in various open positions.
- Offers fully adjustable louvres at little more than fixed louvre prices.
- Ideal as a stand-alone panel or used within Sliding, Bifolding and Hinged doors.
- KISS Pivot louvres allow for greater versatility and design options when considering hand adjustable louvres.
- A flush fitting stainless steel Slidelock provides locking points at fully closed, 45°, 90° and 135°
- Each blade has a woolpile closing strip to ensure snug rattle free closing.
- Functional, reliable operable louvre design.

**SURFACE FINISHING OPTIONS**

A wide range of options are available.

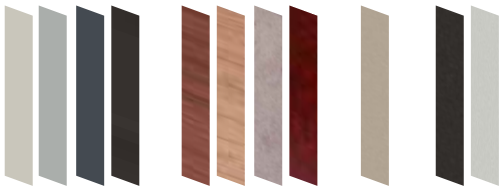



©Louvretec 2025 – All Rights Reserved. Technical specifications subject to change without notice.

# HAND OPERABLE KISS PIVOT LOUVRES

Compatible Louvres: 90 Airfoil, 150 Midi

## 90MM MIDI LOUVRE

Small to medium size

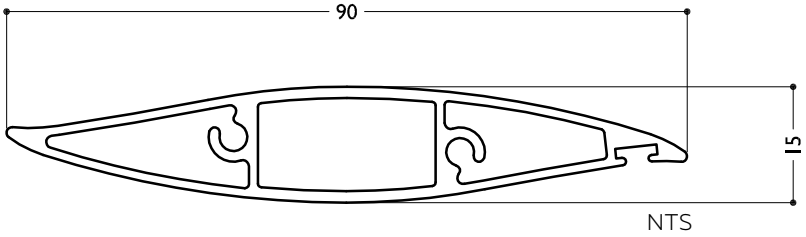


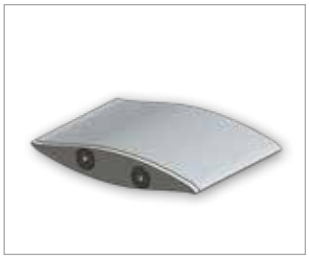

90MM AIRFOIL LOUVRE

The 90mm Midi Louvre is similar to the 'wave' shape of the 150mm blade & is a perfect mix of compact width with good spans. This blade can be hand operated using the KISS Pivot system. The blades can be locked closed or in a number of opening positions. A woolpile closing insert ensures a snug fit when closed.

The 90mm Midi Louvre is well suited fixed within an opening or within sliding, bi-folding or hinged doors.

Also available end and bracket fixed.

REFER TECHNICAL DETAILS PAGE 10.1.06

## 150MM MIDI LOUVRE

Wave shaped blade

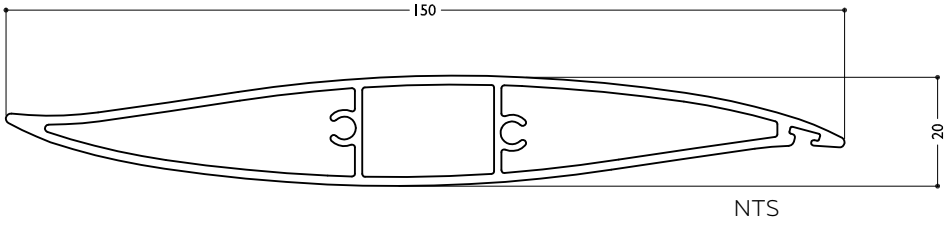




150MM AIRFOIL LOUVRE

The 150mm Midi is the largest of the 'wave' shape group of louvres.

The wider blade spans well and is ideal for closing off decks and verandah spaces. This versatile louvre is available in both Spiral (motorised and hand operable) and KISS (hand adjustable) Pivot systems. KISS Pivot louvres are hand operated and can be locked closed in various opened positions.

A woolpile closing insert ensures a snug fit when closed. This blade is well suited fixed within an opening or within sliding, bifolding or hinged doors. Also available end and bracket fixed.

REFER TECHNICAL DETAILS PAGE 10.1.07

©Louvretec 2025 – All Rights Reserved. Technical specifications subject to change without notice.





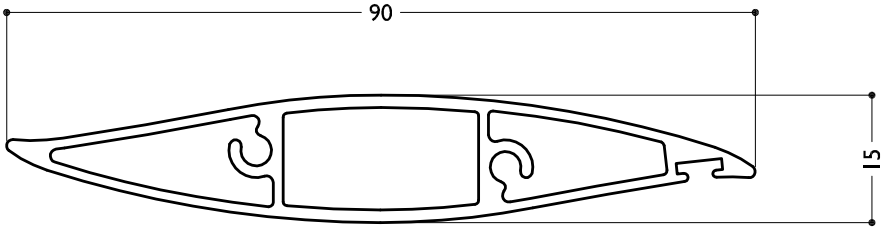


| BLADE SPECIFICATIONS | | | |
|---|---|---|---|
| Blade cover - opening system | 80 mm | Weight per linear metre - opening system | 0.75 kg/lm |
| Weight per square metre - opening system | 9.38 kg/sqm | Actual blade width | 90 mm |
| Blade centres - opening system | 80 mm | | |

## SPANS AT A GLANCE

Refer Engineering Section. Climate, terrain, shielding, location, type of structure contribute to determine spans.

| WIND ZONE | INSIDE | LOW | MEDIUM | HIGH | VERY HIGH | EXTRA HIGH |
|---|---|---|---|---|---|---|
| Factored wind speed at building | Self wt | 32 m/s<br>115 km/hr | 37m/s<br>133 km/hr | 44 m/s<br>158 km/hr | 50 m/s<br>179 km/hr | 55 m/s<br>198 km/hr |
| Adjustable & Fixed, Horizontal & Vertical | 2350 | 2000 | 1850 | 1600 | 1500 | 140 |

## INSTALLATION OPTIONS

### CALCULATE OPTIMUM FRAME OPENING SIZES FOR KISS PIVOT

Width: Check engineering limits

Height: Calculation example showing 17 blades

| | |
|---|---|
| STEP 1 | |
| 16 blades x 80 | 1280 |
| 1 blade at 90 | +90 |
| 17 blades | =1370 |
| STEP 2 | |
| Blade cover | 1370 |
| + top and bottom closing angles allow for | |
| 16mm + 16mm | 32 |
| Total exact opening height= | 1402* |

*This is inside measure - not outer frame size



KISS PIVOT SYSTEM - 90MM MIDI LOUVRE PANEL



©Louvretec 2025 – All Rights Reserved. Technical specifications subject to change without notice.



## BLADE SPECIFICATIONS **150MM MIDI LOUVRE**

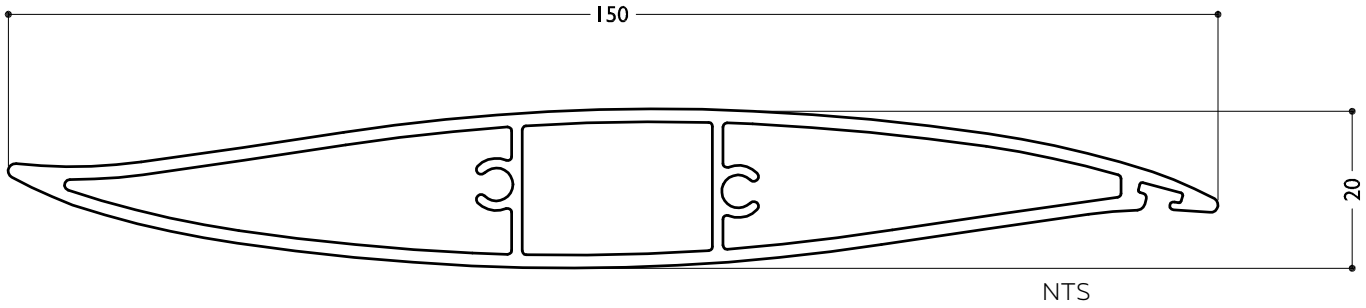


| BLADE SPECIFICATIONS | | | |
|---|---|---|---|
| Blade cover - opening system | 138 mm | Weight per linear metre - opening system | 1.47 kg/lm |
| Weight per square metre - opening system | 10.7 kg/sqm | Actual blade width | 150 mm |
| | | | |

### SPANS AT A GLANCE

Refer Engineering Section. Climate, terrain, shielding, location, type of structure contribute to determine spans.

| WIND ZONE | INSIDE | LOW | MEDIUM | HIGH | VERY HIGH | EXTRA HIGH |
|---|---|---|---|---|---|---|
| Factored wind speed at building | Self wt | 32 m/s<br>115 km/hr | 37m/s<br>133 km/hr | 44 m/s<br>158 km/hr | 50 m/s<br>179 km/hr | 55 m/s<br>198 km/hr |
| Adjustable & Fixed, Horizontal & Vertical | 2900 | 2750 | 2500 | 2200 | 2000 | 1900 |

### INSTALLATION OPTIONS

**CALCULATE OPTIMUM FRAME OPENING SIZES FOR KISS PIVOT**

Width: Check engineering limits

Height: Calculation example showing 17 blades

STEP 1

| | |
|---|---|
| 16 blades x 138 | 2208 |
| 1 blade at 150 | + 150 |
| 17 blades | = 2358 |

STEP 2

| | |
|---|---|
| Blade cover | 2358 |
| + top and bottom closing angles allow for 21mm + 21mm | + 42 |
| Total exact opening height = | 2400* |

*This is inside measure - not outer frame size



KISS PIVOT SYSTEM - 150MM MIDI LOUVRE PANEL

©Louvretec 2025 – All Rights Reserved. Technical specifications subject to change without notice.

90MM KISS PIVOT FITTING INTO DOOR FRAME

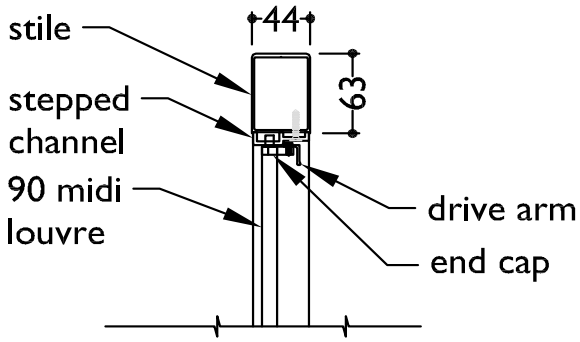


150MM KISS PIVOT FITTING INTO DOOR FRAME

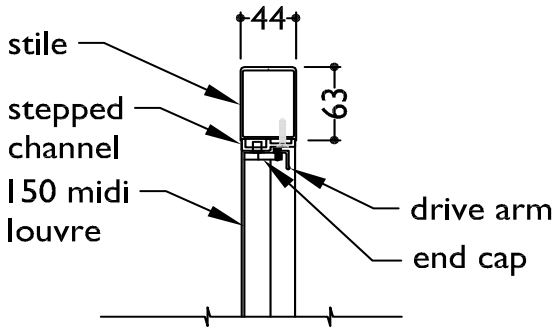


CROSS SECTION - DOOR PANEL SIDE ELEVATION

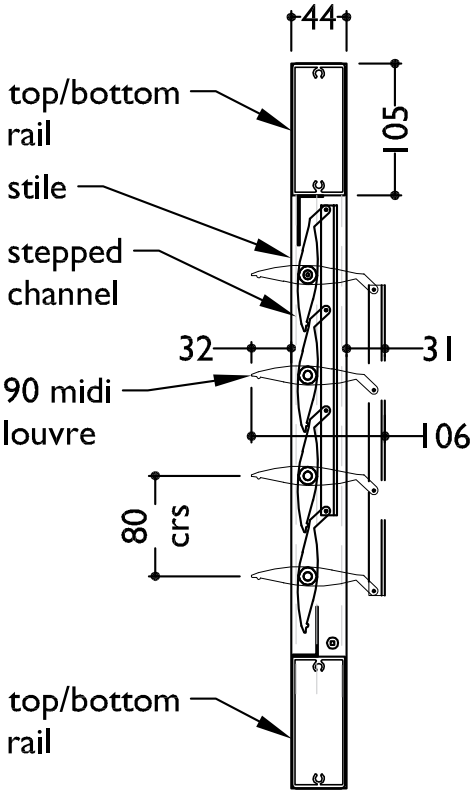


CROSS SECTION - DOOR PANEL SIDE ELEVATION

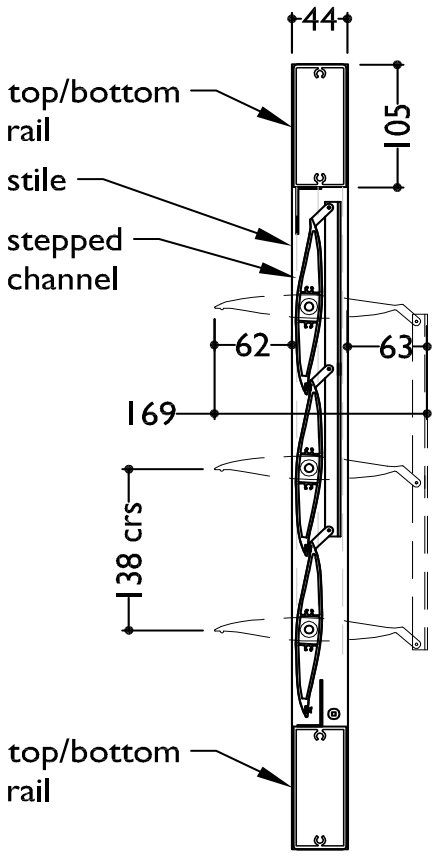




FILE: SUN LOUVRES Kiss Pivot 10.1.08 DATE MODIFIED: 01/06/2024 SCALE:
www.louvretec.co.nz www.louvretec.com.au

©Louvretec 2025 - All Rights Reserved. Technical specifications subject to change without notice.

# HAND OPERABLE KISS PIVOT LOUVRES

Compatible Louvres: 95 Bella Vista, 95 Bella Vista Heavy

## 95MM BELLA VISTA

Rectangular option for infills

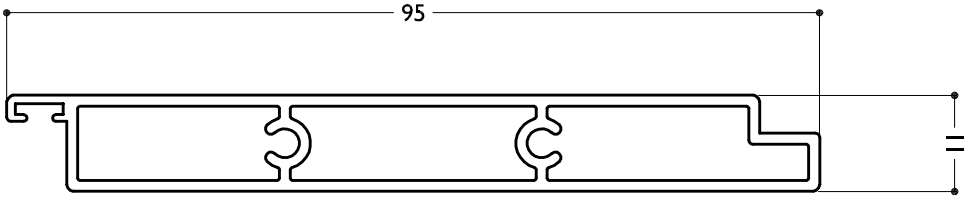


95MM BELLA VISTA

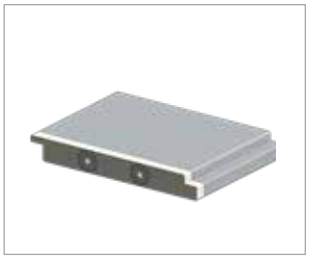

The Bella Vista family of two louvre blades is available in standard or heavy versions and offers a rectangular option to the 90mm KISS Midi Louvre.

Available as a hand operated KISS Pivot system and offering the advantages of fully adjustable louvres at little more than fixed louvre prices.

The rectangular blades close onto a woolpile strip and sit flush when closed giving a pleasing contrast to traditional shaped louvres. Particularly well suited to hinged or sliding shutters.

Also available end fixed.

REFER TECHNICAL DETAILS PAGE 10.1.10

## 95MM BELLA VISTA HEAVY

Ideal for exposed locations

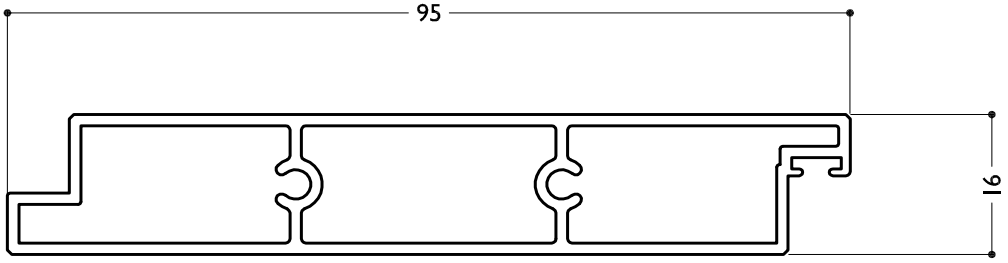


95MM BELLA VISTA HEAVY

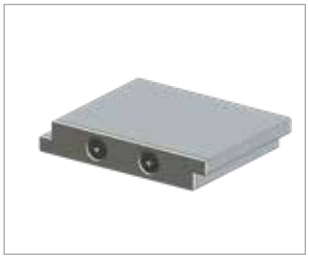

The Bella Vista family of two louvre blades is available in standard or heavy versions and offers a rectangular option to the 90mm KISS Midi Louvre.

Bella Vista Heavy is a hand operated KISS Pivot system and shares all the characteristics of the 95mm Bella Vista.

Designed to incorporate increased spanning capability this blade out performs all other louvres in its class and is particularly well suited to exposed locations.

REFER TECHNICAL DETAILS PAGE 10.1.11

Also available end fixed.

©Louvretec 2025 – All Rights Reserved. Technical specifications subject to change without notice.





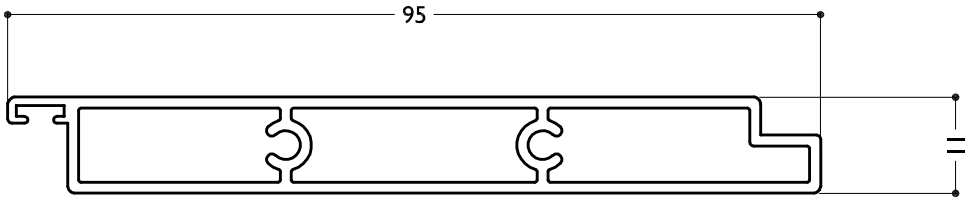


NTS

| BLADE SPECIFICATIONS | | | |
|---|---|---|---|
| Blade cover - opening system | 90 mm | Weight per linear metre - opening system | 0.68 kg/lm |
| Weight per square metre - opening system | 7.55 kg/sqm | Actual blade width | 95 mm |
| Blade centres - opening system | 90 mm | | |

## SPANS AT A GLANCE

Refer Engineering Section. Climate, terrain, shielding, location, type of structure contribute to determine spans.

| WIND ZONE | INSIDE | LOW | MEDIUM | HIGH | VERY HIGH | EXTRA HIGH |
|---|---|---|---|---|---|---|
| Factored wind speed at building | Self wt | 32 m/s<br>115 km/hr | 37m/s<br>133 km/hr | 44 m/s<br>158 km/hr | 50 m/s<br>179 km/hr | 55 m/s<br>198 km/hr |
| Adjustable & Fixed, Horizontal & Vertical | 2550 | 2100 | 1900 | 1700 | 1550 | 1450 |

## INSTALLATION OPTIONS

### CALCULATE OPTIMUM FRAME OPENING SIZES FOR KISS PIVOT

Width: Check engineering limits

Height: Calculation example showing 17 blades

STEP 1

| | |
|---|---|
| 16 blades x 90 | 2208 |
| 1 blade at 95 | + 95 |
| 17 blades | = 1535 |

STEP 2

| | |
|---|---|
| Blade cover | 1535 |
| + top and bottom closing angles allow for 16mm + 16mm | + 32 |
| Total exact opening height = 1567* | |

*This is inside measure - not outer frame size



95MM BELLA VISTA KISS PIVOT PANEL



©Louvretec 2025 – All Rights Reserved. Technical specifications subject to change without notice.



## BLADE SPECIFICATIONS 95MM **BELLA VISTA HEAVY**

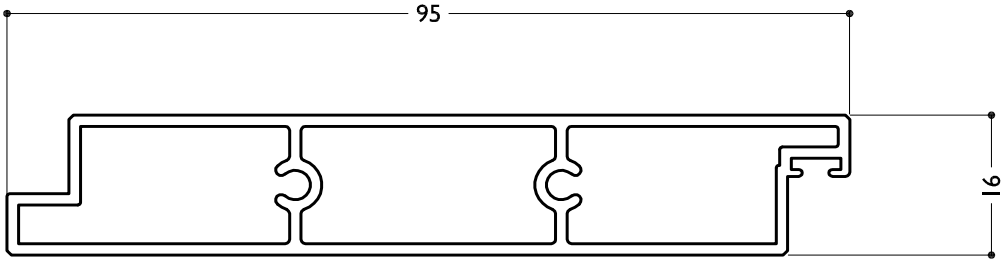


NTS

| BLADE SPECIFICATIONS | | | |
|---|---|---|---|
| Blade cover - opening system | 90 mm | Weight per linear metre - opening system | 0.91 kg/lm |
| Weight per square metre - opening system | 10.1 kg/sqm | Actual blade width | 95 mm |
| Blade centres - opening system | 90 mm | | |

### SPANS AT A GLANCE

Refer Engineering Section. Climate, terrain, shielding, location, type of structure contribute to determine spans.

| WIND ZONE | INSIDE | LOW | MEDIUM | HIGH | VERY HIGH | EXTRA HIGH |
|---|---|---|---|---|---|---|
| Factored wind speed at building | Self wt | 32 m/s<br>115 km/hr | 37m/s<br>133 km/hr | 44 m/s<br>158 km/hr | 50 m/s<br>179 km/hr | 55 m/s<br>198 km/hr |
| Adjustable & Fixed, Horizontal & Vertical | 3000 | 2800 | 2550 | 2250 | 2050 | 1900 |

### INSTALLATION OPTIONS

#### CALCULATE OPTIMUM FRAME OPENING SIZES FOR KISS PIVOT

Width: Check engineering limits

Height: Calculation example showing 17 blades

STEP 1

| | |
|---|---|
| 16 blades x 138 | 1440 |
| 1 blade at 95 | + 95 |
| 17 blades | = 1535 |

STEP 2

| | |
|---|---|
| Blade cover | 1535 |
| + top and bottom closing angles allow for 16mm + 16mm | + 32 |
| Total exact opening height = | 1567* |

*This is inside measure - not outer frame size



95MM BELLA VISTA HEAVY KISS PIVOT PANEL

©Louvretec 2025 – All Rights Reserved. Technical specifications subject to change without notice.

**TYPICAL DETAIL : KISS PIVOT**
**95MM BELLA VISTA & 95MM BELLA VISTA HEAVY**

CROSS SECTION PLAN VIEW 95MM BELLA VISTA
KISS PIVOT FITTING WITHIN AN OPENING

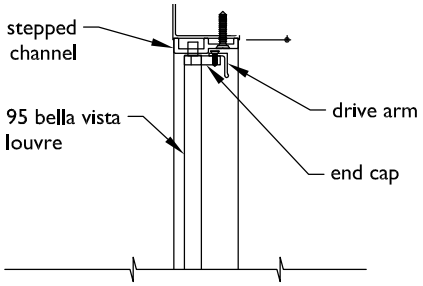


CROSS SECTION PLAN VIEW
95 BELLA VISTA HEAVY KISS PIVOT IN DOOR PANEL

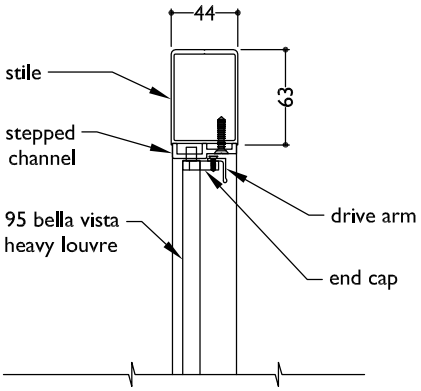


CROSS SECTION - DOOR PANEL SIDE ELEVATION
BELLA VISTA KISS PIVOT FITTING WITHIN AN
OPENING

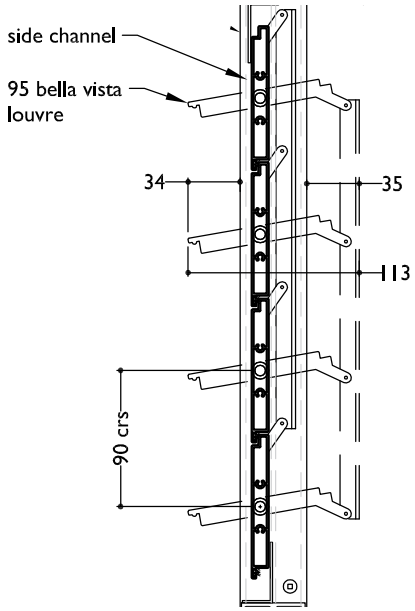


CROSS SECTION - SIDE ELEVATION
95 BELLA VISTA HEAVY KISS PIVOT IN DOOR
PANEL

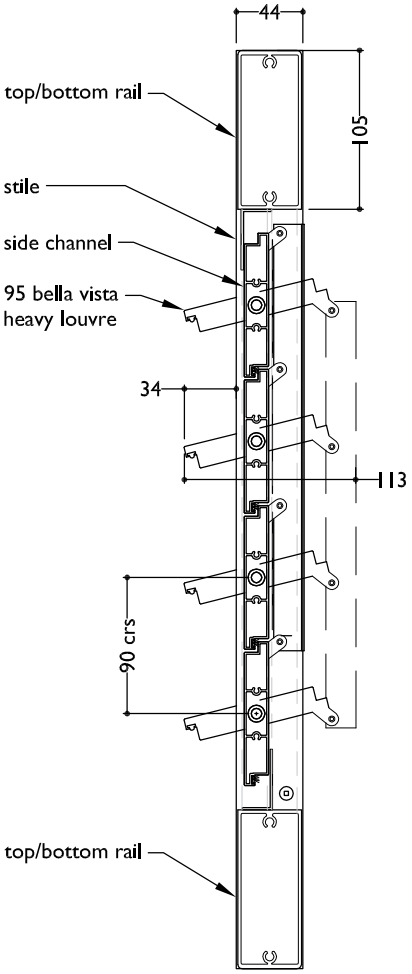




FILE: SUN LOUVRES Kiss Pivot 10.1.12 DATE MODIFIED: 01/06/2024 SCALE:

www.louvretec.co.nz www.louvretec.com.au
©Louvretec 2025 - All Rights Reserved. Technical specifications subject to change without notice.



sun louvres
By Louvretec

## SPIRAL PIVOT SUN LOUVRES


| | |
|---|---|
| Gallery and Overview | 10.2.02 - 10.2.04 |
| Overhead Sun Louvres Fitting into Existing Opening | 10.2.05 - 10.2.07 |
| Vertical Sun Louvres Fitting into Existing Opening | 10.2.08 - 10.2.09 |
| Elam Street Structural Frames | 10.2.10 - 10.2.11 |
| Vertical Balustrades | 10.2.12 |
| Raking Panels | 10.2.13 |
| Hand Operable Panels | 10.2.14 |
| Quick Reference Spiral Plvot Sun Louvre Spans | 10.2.15 - 10.2.16 |
| 120mm Airfoil & 180mm Airfoil Louvres | 10.2.17 - 10.2.21 |
| 150mm Midi & 200mm Maxi Louvres | 10.2.22 - 10.2.27 |
| 120mm Flush, 180mm Flush & 200mm Flush Louvres | 10.2.28 - 10.2.35 |
| 135 Hi-Span Operable Louvre Balustrades (NZ) | 10.2.36 - 10.2.40 |
| 165 Hi-Span Operable Louvre Balustrades (AUS) | 10.2.41 - 10.2.44 |
| 135 & 165 Hi-Span Fixing Details | 10.2.45 |


©Louvretec 2025 – All Rights Reserved. Technical specifications subject to change without notice.

# SUN LOUVRES SPIRAL PIVOT **GALLERY**











1. MOTORISED 165MM HI-SPAN LOUVRES 2. MOTORISED 135MM HI-SPAN LOUVRES IN ELAM STREET FRAMES 3. MOTORISED 200MM FLUSH LOUVRES
4. MOTORISED 200MM RECTANGULAR LOUVRES
5. MOTORISED 150MM MIDI LOUVRES



©Louvretec 2025 – All Rights Reserved. Technical specifications subject to change without notice.

# DRIVE SYSTEM: SPIRAL PIVOT

## Motorised and Hand Operable Sun Louvre Panels

The Spiral Pivot operating system is as well suited for motorising Sun Louvre panels as it is for motorising Opening Roofs.



HAND ADJUSTABLE, OVERHEAD SUN LOUVRES FITTING WITHIN AN OPENING

## The Spiral Pivot System

Louvretec's award winning Spiral Pivot system operates 17 different styles and shapes of louvres.

Engineered to include:

- Marine grade 12.7mm SS hex drive shaft
- Self-lubricating drive and pivot bearings
- Notched angle double fixed blade retention
- Powered by Somfy motors & controls

Everything is hidden from sight & protected from the weather. There are no unsightly drive arms or external motors on show.

## Reliability

2025 sees over one million individual louvre blades worldwide pivoting with the Louvretec Spiral Drive system. Numbers that speak volumes regarding style, reliability & being totally fit for purpose.



MOTORISED, VERTICAL SUN LOUVRES FITTING WITHIN AN OPENING



MOTORISED, VERTICAL SUN LOUVRES INCLUDING STRUCTURAL FRAME

©Louvretec 2025 – All Rights Reserved. Technical specifications subject to change without notice.

# MOTORISED & HAND OPERABLE SPIRAL PIVOT SUN LOUVRE PANELS

Installation options :

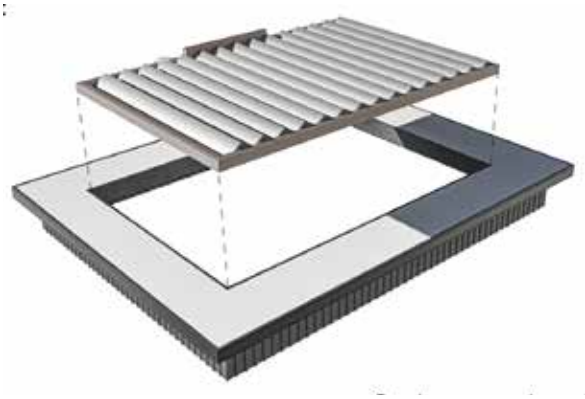

**OVERHEAD FITTING INTO AN EXISTING OPENING**

Sun Louvre panel may have Drive and Pivot Frames only or may have Frame to Four Sides. Motor may be located on top in motor cover, or down under.

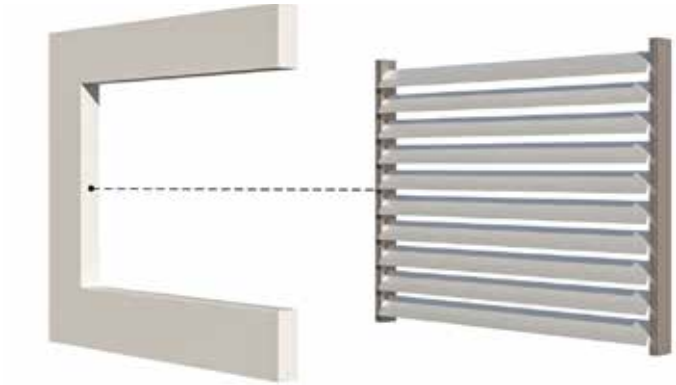

**VERTICAL FITTING INTO AN EXISTING OPENING**

Sun Louvre panel may have Drive and Pivot Frames only or may have Frames to Four Sides. Motor located down under.

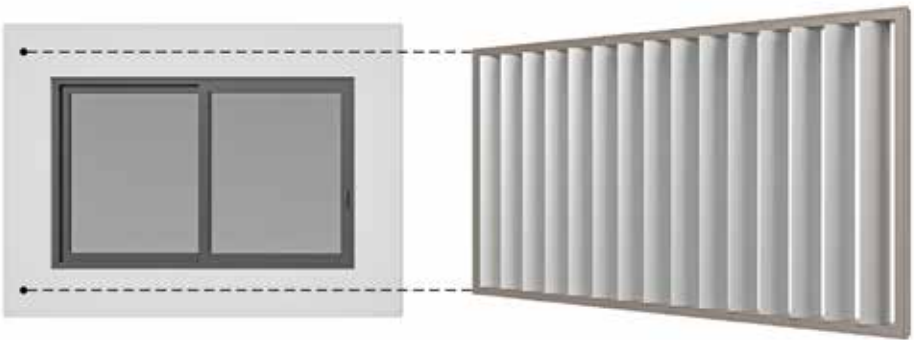

**VERTICAL REQUIRING A STRUCTURAL SUB-FRAME**

Sun Louvre panel includes Elam-Street Structural Frame to Four Sides. Motor located down under.



©Louvretec 2025 – All Rights Reserved. Technical specifications subject to change without notice.

# OVERHEAD SUN LOUVRES FITTING IN TO AN EXISTING OPENING

## Two Frame Options

There are two options when installing Motorised or Hand Operable Sun Louvre Panels into an existing opening.

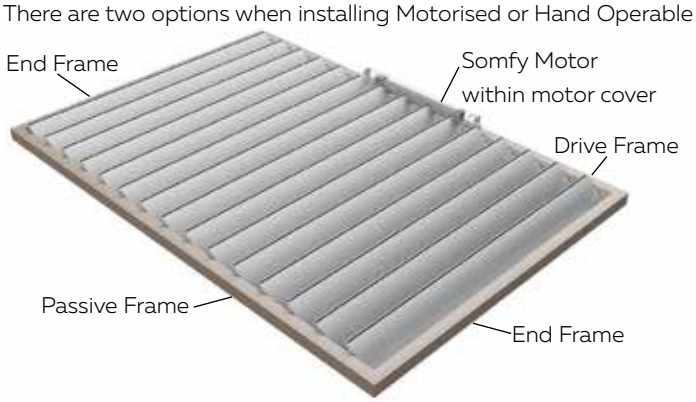


**1. FRAME TO FOUR SIDES - WRAP AROUND**
Drive and Pivot sides are connected with Passive End Frames.

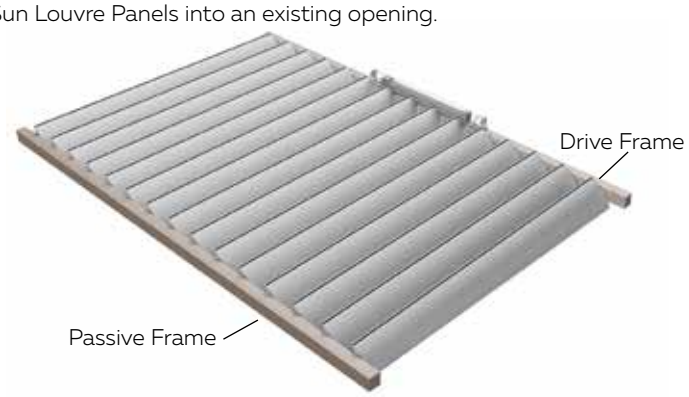


**2. TWO SIDED DRIVE & PASSIVE FRAME**
Frame is Two Sided only with Drive and Passive sides.

## Motorised: Two Options for Motor Location

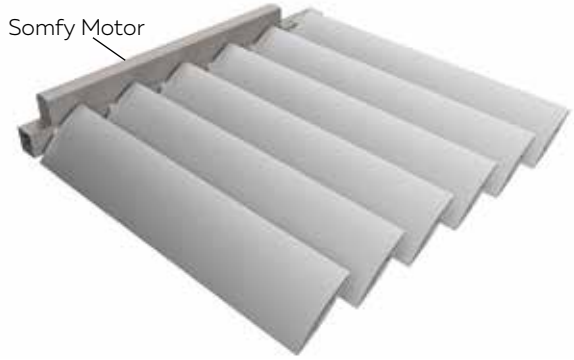


**1. MOTOR ON TOP - LOCATED WITHIN A MOTOR COVER**




**2. MOTOR DOWN-UNDER - LOCATED WITHIN A DOWN-UNDER FRAME**

## Hand Operable Option



**HAND OPERATED OPTION WITH GEARBOX & CRANK HANDLE**

©Louvretec 2025 - All Rights Reserved. Technical specifications subject to change without notice.

## TYPICAL DETAIL: MOTORISED OVERHEAD SPIRAL PIVOT SUN LOUVRES FITTING INTO EXISTING OPENING

SECTION THROUGH SPAN - MOTORISED 200MM MAXI LOUVRE INTO EXISTING OPENING

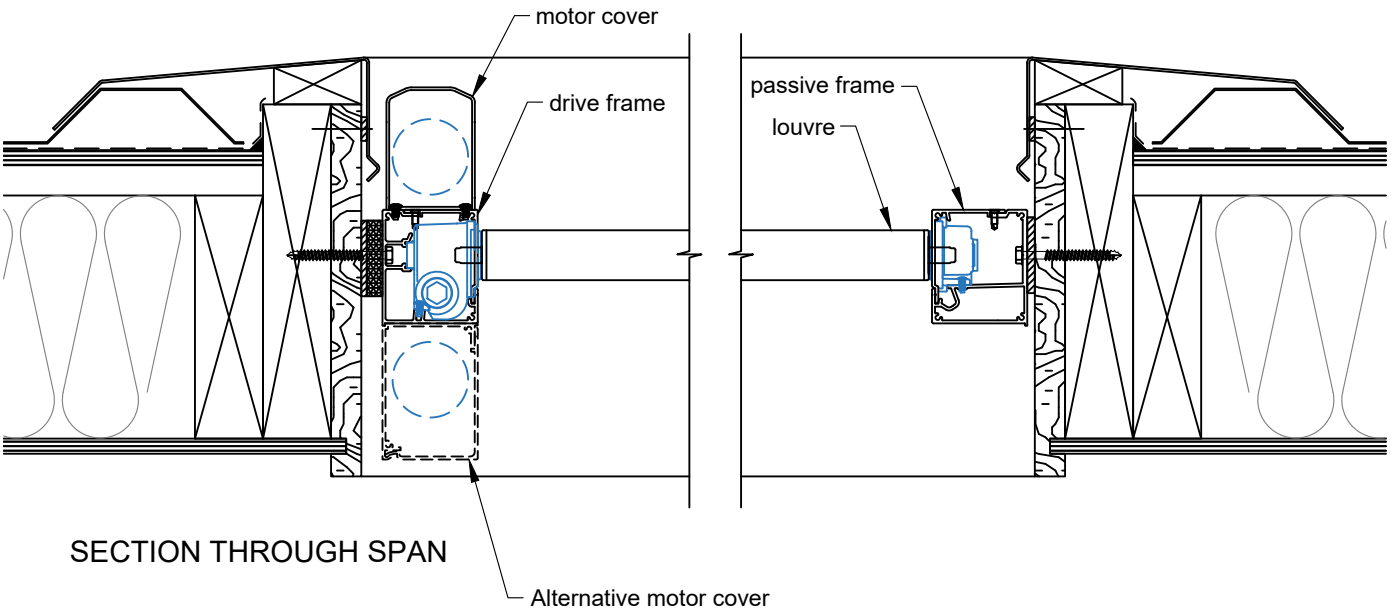


SECTION THROUGH SPAN

SECTION THROUGH LOUVRES - MOTORISED 200MM MAXI LOUVRE INTO EXISTING OPENING

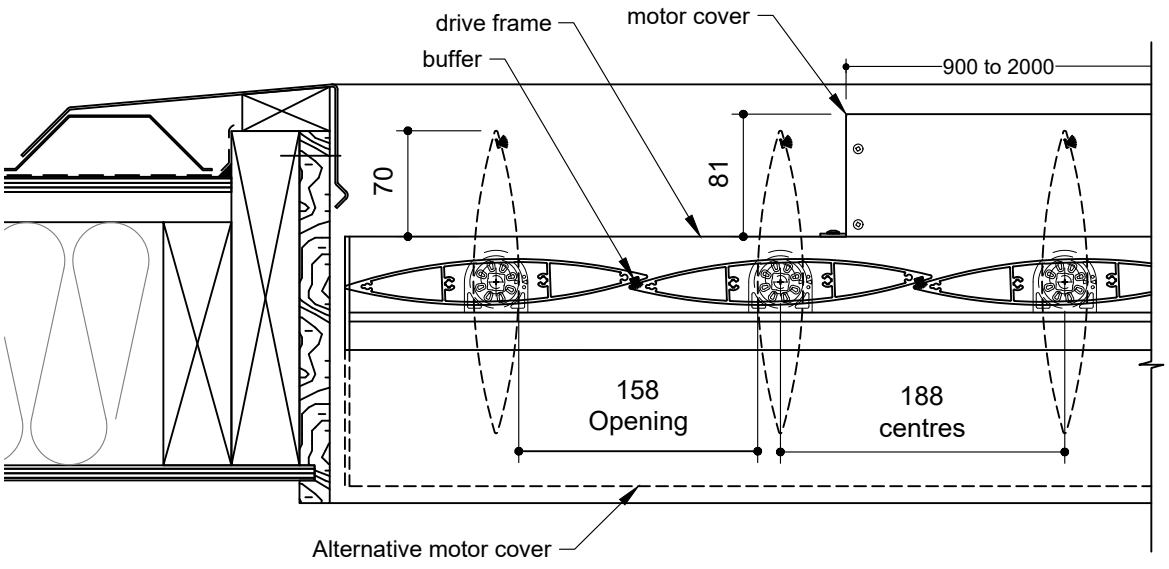


SECTION THROUGH LOUVRES



FILE: SUN LOUVRES Spiral Pivot 10.2.06 DATE MODIFIED: 01/10/2024 SCALE:

www.louvretec.co.nz www.louvretec.com.au

©Louvretec 2025 - All Rights Reserved. Technical specifications subject to change without notice.

SECTION - MANUALLY OPERABLE 200MM MAXI LOUVRE INTO EXISTING OPENING

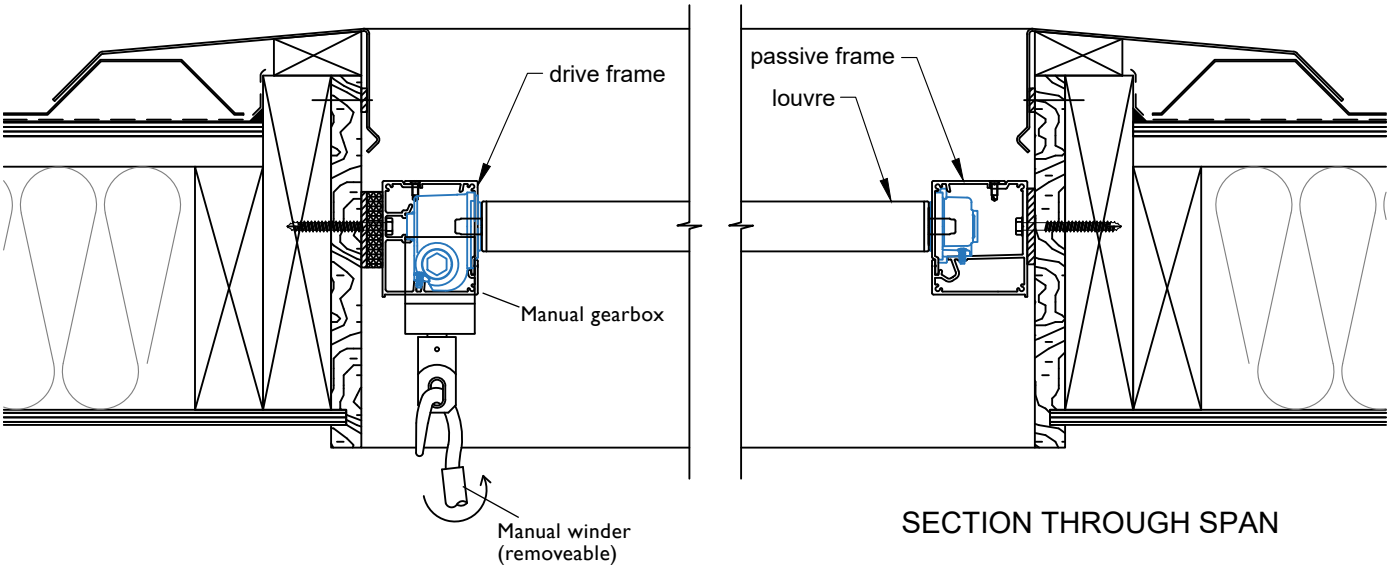


SECTION THROUGH SPAN

SECTION - MANUALLY OPERABLE 200MM MAXI LOUVRE INTO EXISTING OPENING

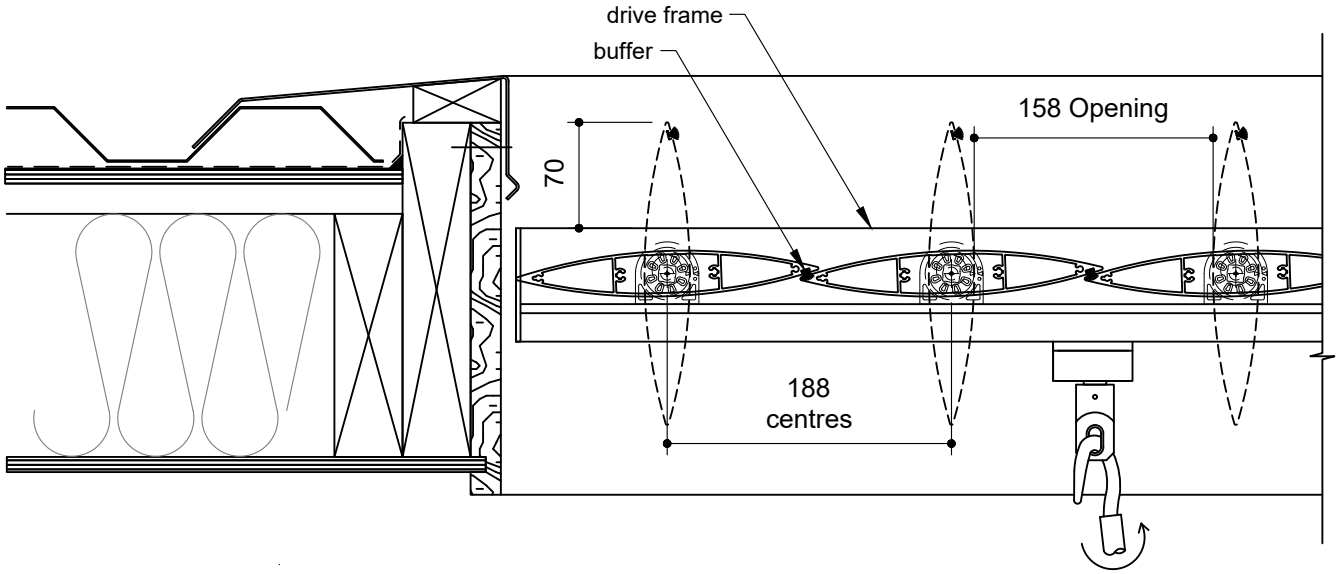


SECTION THROUGH LOUVRES


©Louvretec 2025 – All Rights Reserved. Technical specifications subject to change without notice.

# VERTICAL SPIRAL PIVOT SUN LOUVRE PANELS

Installation: Blades can be installed vertically or horizontally

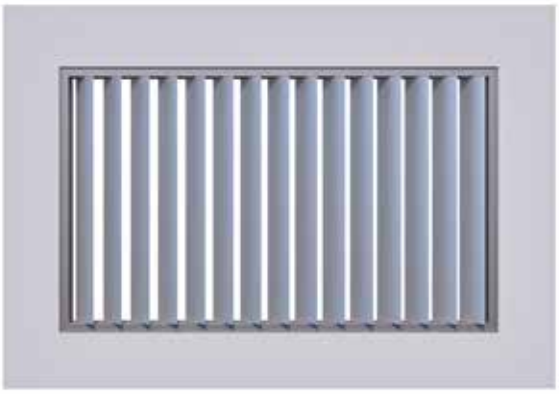

**1. VERTICAL MOTORISED LOUVRE PANEL WITH BLADES RUNNING VERTICALLY, FITTING INTO AN EXISTING OPENING**



**2. VERTICAL MOTORISED LOUVRE PANEL WITH BLADES RUNNING HORIZONTALLY, FITTING INTO AN EXISTING OPENING**

## Location of Motor

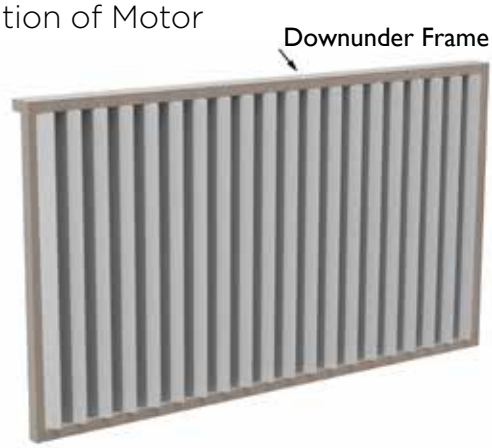


**1. FRAME IS FOUR SIDED WRAP AROUND. DRIVE AND PIVOT SIDES ARE CONNECTED WITH PASSIVE END FRAMES**

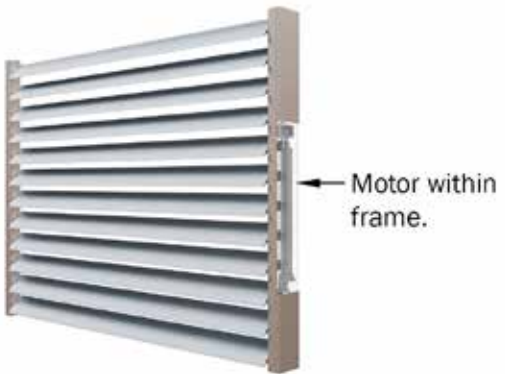


**2. FRAME IS TWO SIDED ONLY, DRIVE AND PIVOT SIDES**

## Hand Operable

**VERTICAL LOUVRES CAN BE HAND OPERATED WITH A GEARBOX & CRANK HANDLE**

**REFER TO PAGE 10.2.14**



**VERTICAL PANELS**

- Short crank handles for easily accessible vertical panels are available in three standard lengths; 30mm, 95mm, 150mm
- Refer to page 10.2.14 for details

**OVERHEAD PANELS**

- Overhead access is made easy with hook handles available in the following standard lengths; 600mm, 900mm 1200mm, 1500mm, 1800mm
- A short or long eyelet is also available.



©Louvretec 2025 – All Rights Reserved. Technical specifications subject to change without notice.

## INSERT HORIZONTAL LOUVRES - PLAN VIEW

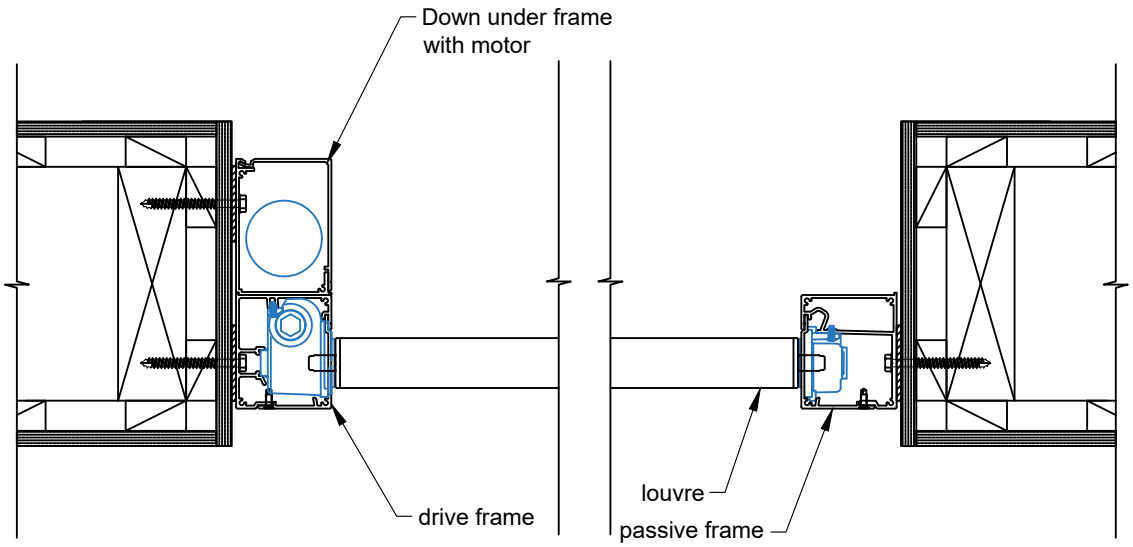


Insert Horizontal Louvres

## INSERT VERTICAL LOUVRES - SECTION VIEW

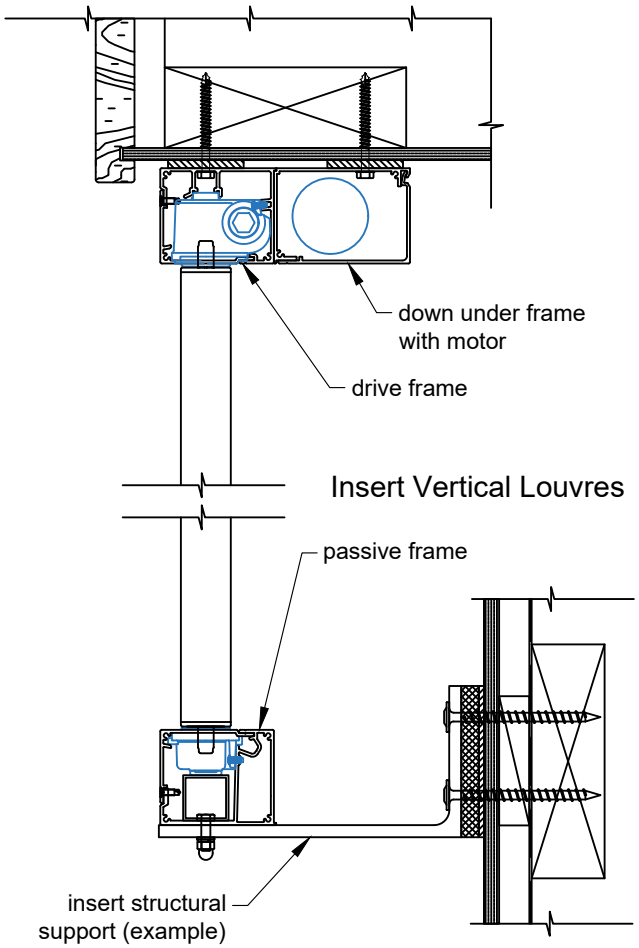


Insert Vertical Louvres

## DRIVE, PASSIVE & DOWN UNDER FRAMES



6102
spiral cover
angle

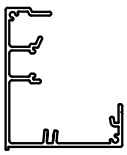

6105
spiral 63mm
drive frame

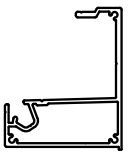

6104
spiral 63mm
passive frame

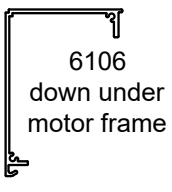

6106
down under
motor frame

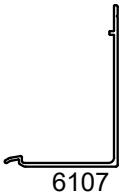

6107
down under
motor cover


©Louvretec 2025 – All Rights Reserved. Technical specifications subject to change without notice.

# VERTICAL SPIRAL PIVOT SUN LOUVRE PANELS

Installation: Blades can be installed vertically or horizontally in a Structural Sub-Frame

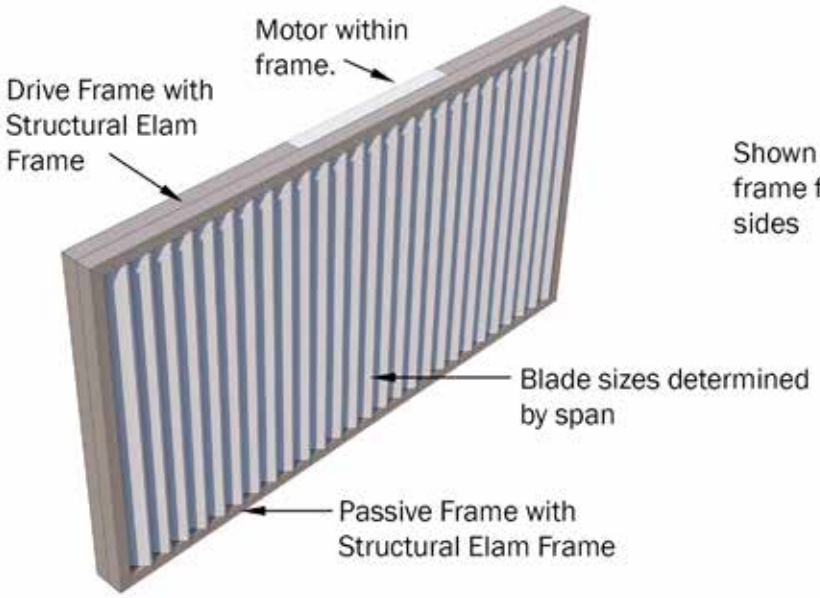


**1. VERTICAL MOTORISED SUN LOUVRES RUNNING VERTICALLY, FITTING WITHIN AN ELAM STREET STRUCTURAL SUB-FRAME**

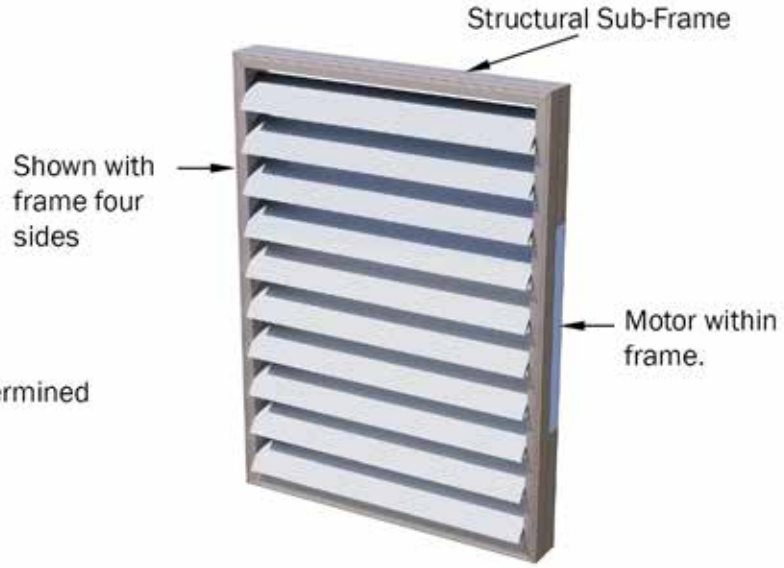


**2. VERTICAL MOTORISED SUN LOUVRES RUNNING HORIZONTALLY, FITTING WITHIN AN ELAM STREET STRUCTURAL SUB-FRAME**

## Location of Motor

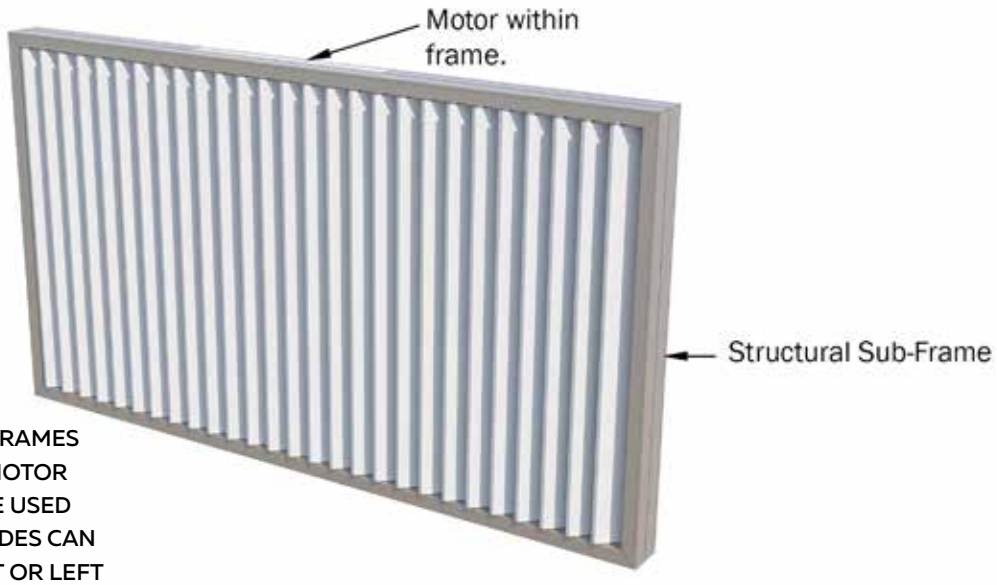


**ELAM STREET STRUCTURAL SUB-FRAMES EXTEND ALL FOUR SIDES HIDING MOTOR & WIRING. DEPENDING ON LOUVRE USED CONFIGURATION DRIVE & PIVOT SIDES CAN BE EITHER TOP OR BOTTOM, RIGHT OR LEFT**

## Hand Operable

Due to the Structural Frame sitting outside the building, very few Elam Street panels are hand operated as this would require the gearbox shaft protruding through the building. Conventional Motorised or Solar Powered Motorisation (if no power is available) are the preferred options.



©Louvretec 2025 – All Rights Reserved. Technical specifications subject to change without notice.

## ELAM STREET STRUCTURAL SUB-FRAME - HORIZONTAL LOUVRES - PLAN VIEW

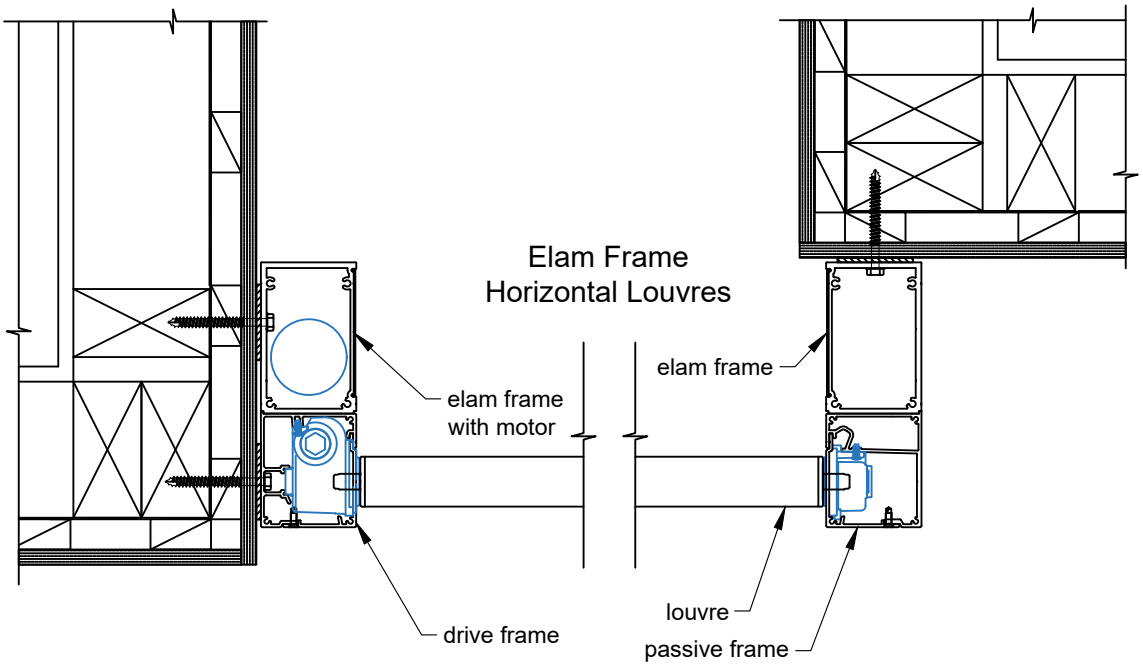


## ELAM STREET STRUCTURAL SUB-FRAME VERTICAL LOUVRES - SECTION VIEW

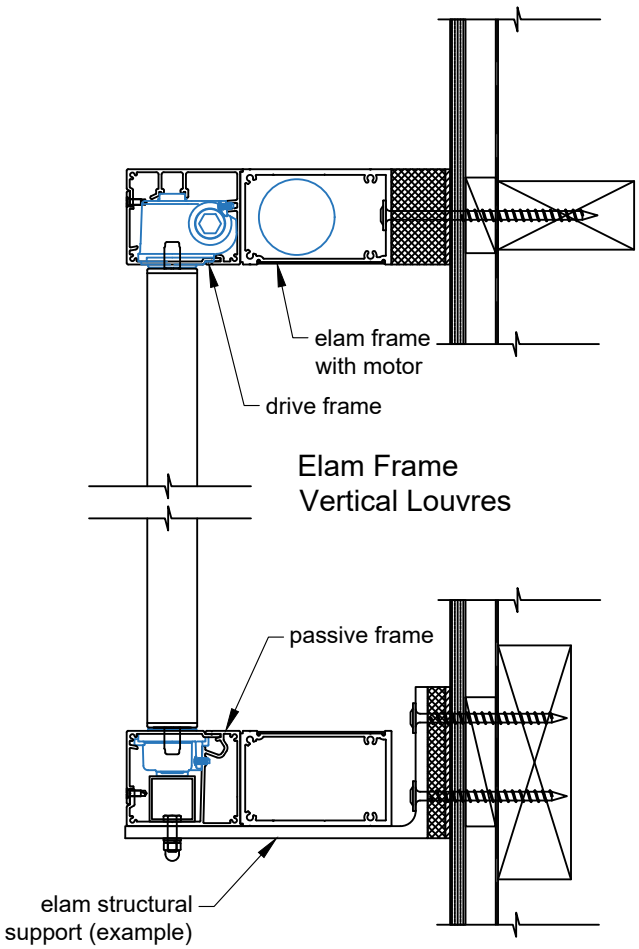


## ELAM STREET STRUCTURAL SUB-FRAMES

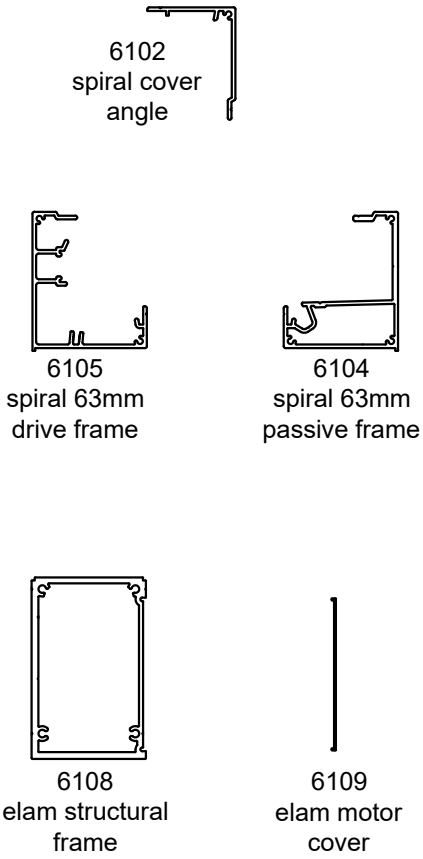



©Louvretec 2025 – All Rights Reserved. Technical specifications subject to change without notice.

# DRIVE SYSTEM - SPIRAL PIVOT

## Vertical Balustrades

Louvretec's Hi-Span Spiral Pivot operated balustrade louvre system has been designed to meet Australian & NZ Standards.

- Motorised or hand-operated this unique louvre system can be used as a balustrade, spanning up to 3000mm high.
- 165mm Hi-Span opens to a maximum of 125mm as required in Australia.
- 135mm Hi-Span opens to a maximum of 100mm as required in NZ
- The louvre is rated to be used as an infill panel only.
- Structural balustrade support of the infill panel by others.



HAND OPERABLE HI-SPAN BALUSTRADE

**1M PLUS AND FULL HEIGHT BALUSTRADE LOUVRES**

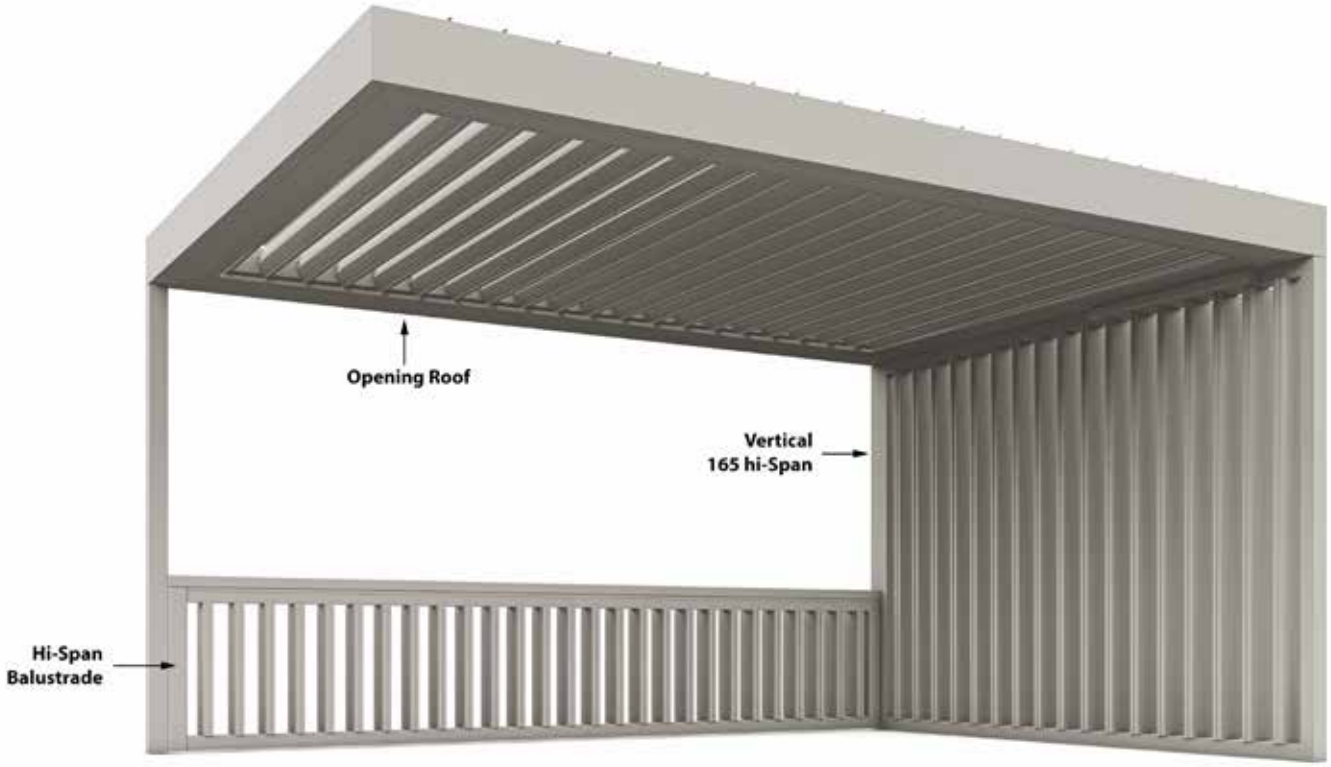


VERTICAL HI-SPAN BALUSTRADE



©Louvretec 2025 – All Rights Reserved. Technical specifications subject to change without notice.



MOTORISED RAKING PANEL, THE NETHERLANDS

# DRIVE SYSTEM - SPIRAL PIVOT

## Raking panels

Louvretec can offer Raking Frames covering a wide range of Spiral Pivot Louvres.

- Choice of Airfoil or Rectangular Louvres
- Suitable for Vertical Wall Panels or Raking Overhead Panels.
- Can be installed on any pitch up to 45 degrees.
- Spiral Drive system sits within non-raking side.

Contact your local Louvretec Dealer regarding custom made Raking Panels.

**VERTICAL OR OVERHEAD PANELS**



200MM MAXI LOUVRE RAKING PANEL. MOTORISED BY SPIRAL PIVOT SYSTEM

©Louvretec 2025 - All Rights Reserved. Technical specifications subject to change without notice.

# SPIRAL PIVOT DRIVE SYSTEM

## Manually operated Spiral Pivot with Pivot Handle

### VERTICAL PANELS HANDLE DETAILS

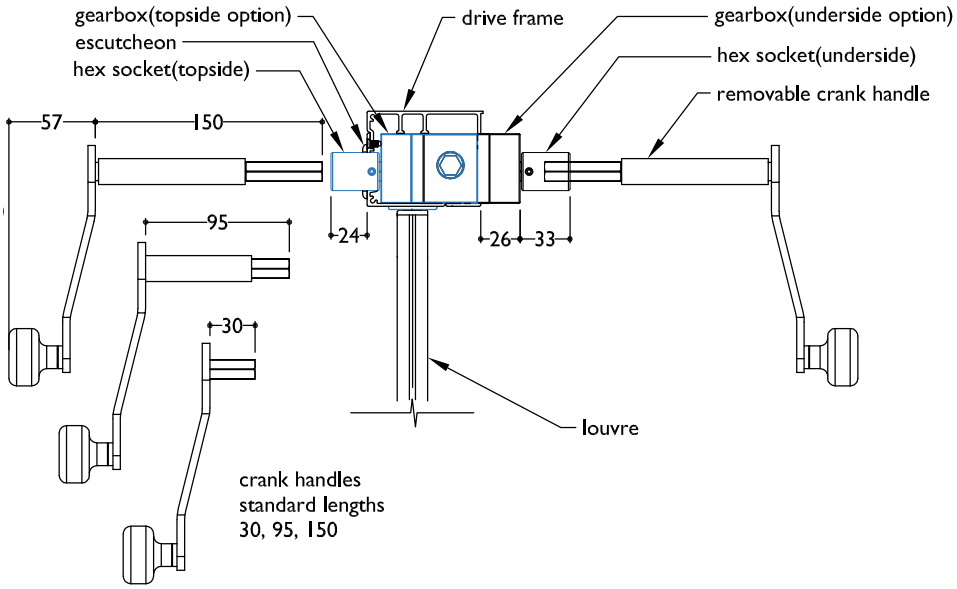


### OVERHEAD PANELS HANDLE DETAILS

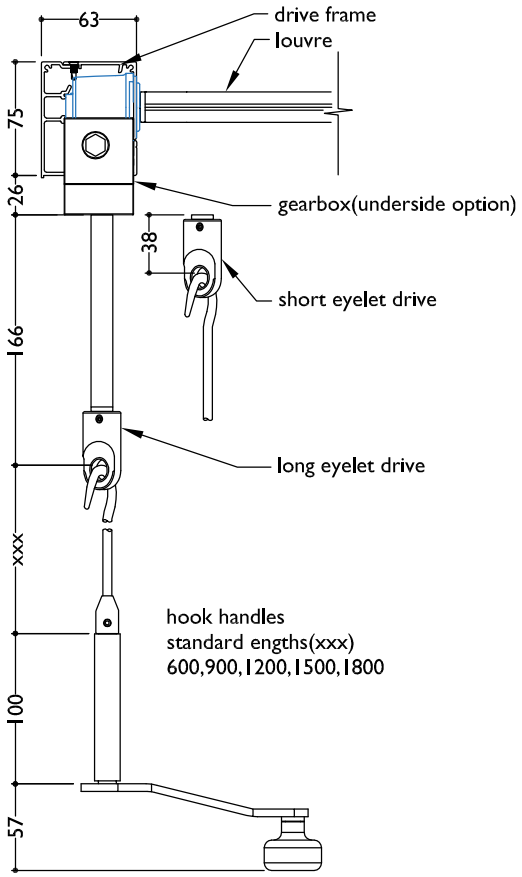


### MANUAL OPERATION

Manual gearboxes can be installed for operation from either the topside or the underside of the Drive Frame. The Gearbox Hex Socket and Escutcheon (topside only) have a hard, anodised finish (silver). Louvre handles are stainless steel/aluminium



FILE: SUN LOUVRES Spiral Pivot 10.2.14 DATE MODIFIED: 01/10/2024 SCALE:
www.louvretec.co.nz www.louvretec.com.au

©Louvretec 2025 - All Rights Reserved. Technical specifications subject to change without notice.

# QUICK REFERENCE

## COMPATIBLE SUN LOUVRES WITH SPIRAL PIVOT SYSTEM

### SPIRAL PIVOT SUN LOUVRES RANGE


| | |
|---|---|
| 120 Airfoil & 180 Airfoil Louvres | 10.2.17 - 10.2.21 |
| 150 Midi & 200 Maxi Louvres | 10.2.22 - 10.2.27 |
| 120 Flush Mini, 180 Flush Midi & 200 Flush Maxi Louvres | 10.2.28 - 10.2.35 |
| 135 Hi-Span Balustrade Louvre (NZ) | 10.2.36 - 10.2.40 |
| 165 Hi-Span Balustrade Louvre (AU) | 10.2.41 - 10.2.44 |
| 135 Hi-Span & 165 Hi-Span Balustrades Fixing Details | 10.2.45 |


©Louvretec 2025 – All Rights Reserved. Technical specifications subject to change without notice.

APPLICATION OVERVIEW **GROUPED SPIRAL PIVOT LOUVRES AT GLANCE**

MINIMUM - MAXIMUM BLADE SPANS AT A GLANCE AS DETERMINED BY WIND SPEED. REFER TO SECTION ENGINEERING REPORTS FOR FULL DETAILS ON BLADE SPANS.

EXTRA HIGH WIND SPEED 198KM/H 55M/S — EX HIGH

LOW WIND SPEED 115KM/H 32M/S — LOW

# LOUVRETEC SUN LOUVRES COMPATIBLE WITH SPIRAL PIVOT SYSTEM

## Motorised & Hand Operable Sun Louvre System

IF A LOUVRE YOU WISH TO SPECIFY IS NOT SHOWN IN THIS SECTION PLEASE CONTACT YOUR DEALER.
WE'RE FOCUSED TO MEETING YOUR NEEDS WITH TAILORED SOLUTIONS.

| SPIRAL PIVOT APPLICATION | LOUVRE | MAXIMUM SPANS |
|---|---|---|
| MOTORISED & HAND OPERABLE INSERT PANELS |  120 AIRFOIL LOUVRE | 1600MM EX HIGH<br>2300MM LOW |
| |  180 AIRFOIL LOUVRE | 2050MM EX HIGH<br>2950MM LOW |
| |  150 MIDI LOUVRE | 1900MM EX HIGH<br>2750MM LOW |
| |  200 MAXI LOUVRE | 2350MM EX HIGH<br>3700MM LOW |
| |  120 FLUSH MINI LOUVRE | 1750MM EX HIGH<br>2500MM LOW |
| |  180 FLUSH MIDI LOUVRE | 2250MM EX HIGH<br>3350MM LOW |
| |  200 FLUSH MAXI LOUVRE | 2250MM EX HIGH<br>3350MM LOW |
| RAKING PANELS |  200 MAXI LOUVRE | 2350MM EX HIGH<br>3700MM LOW |
| |  200 FLUSH MAXI LOUVRE | 2250MM EX HIGH<br>3350MM LOW |
| BALUSTRADES |  135 HI SPAN BALUSTRADE | 3000MM EX HIGH<br>3000MM LOW |
| |  165 HI SPAN BALUSTRADE | 3300MM EX HIGH<br>3300MM LOW |



©Louvretec 2025 – All Rights Reserved. Technical specifications subject to change without notice.

# MOTORISED & HAND OPERABLE INSERT PANELS AIRFOIL LOUVRES

Compatible Louvres: 120 Airfoil, 180 Airfoil, 150 Midi, 200 Maxi

## 120MM AIRFOIL LOUVRE

Ideal for use within a structural frame

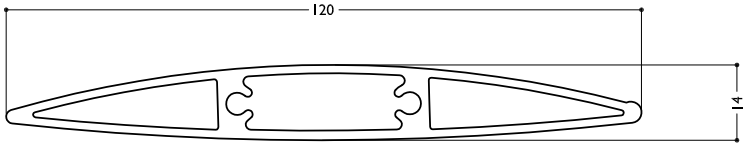


NTS



120MM AIRFOIL LOUVRE

REFER TECHNICAL DETAILS PAGE 10.2.18

## 180MM AIRFOIL LOUVRE

Solution for wider openings

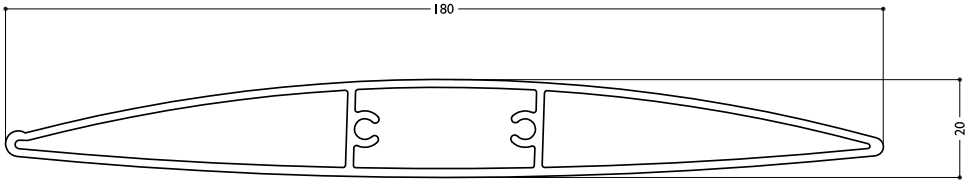


NTS



180MM AIRFOIL LOUVRE

REFER TECHNICAL DETAILS PAGE 10.2.20

©Louvretec 2025 – All Rights Reserved. Technical specifications subject to change without notice.

## SUN LOUVRES **SPIRAL PIVOT**



## **BLADE SPECIFICATIONS** 120MM AIRFOIL LOUVRE

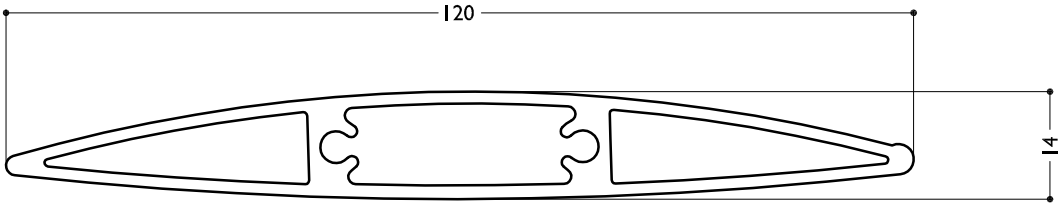


| BLADE SPECIFICATIONS | | | |
|---|---|---|---|
| Blade cover - opening system | 115 mm | Weight per linear metre - opening system | 1.3 kg/lm |
| Weight per square metre - opening system | 11.3 kg/sqm | Actual blade width | 120 mm |
| Blade centres - opening system | 115 mm | | |

### SPANS AT A GLANCE

Refer Engineering Section. Climate, terrain, shielding, location, type of structure contribute to determine spans.

| WIND ZONE | INSIDE | LOW | MEDIUM | HIGH | VERY HIGH | EXTRA HIGH |
|---|---|---|---|---|---|---|
| Factored wind speed at building | Self wt | 32 m/s<br>115 km/hr | 37m/s<br>133 km/hr | 44 m/s<br>158 km/hr | 50 m/s<br>179 km/hr | 55 m/s<br>198 km/hr |
| Adjustable & Fixed, Horizontal & Vertical | 2400 | 2300 | 2100 | 1850 | 1700 | 1600 |

### INSTALLATION OPTIONS

**SPIRAL PIVOT SYSTEM: CALCULATE OPTIMUM FRAME OPENING SIZES**

Width: Check engineering limits

Height: Calculation example showing 17 blades

| STEP 1 | |
|---|---|
| 16 blades x 115 | 1840 |
| 1 blade at 120 | 120 |
| 17 blades | =1960 |

| STEP 2 | |
|---|---|
| Blade cover | 1960 |
| + top and bottom closing angles allow for | |
| 5mm + 5mm | 10 |
| Total exact opening height | =1970 |

*This is inside measure - not outer frame size

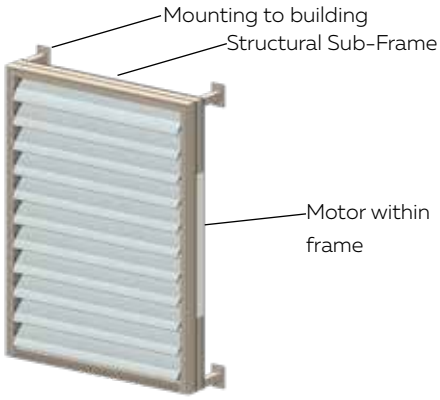


ELAM STREET STRUCTURAL FRAME
VERTICAL PANEL - HORIZONTAL BLADES



©Louvretec 2025 – All Rights Reserved. Technical specifications subject to change without notice.

## SECTION - MOTORISED 120MM AIRFOIL LOUVRE SPIRAL PIVOT ON ELAM STREET STRUCTURAL FRAME

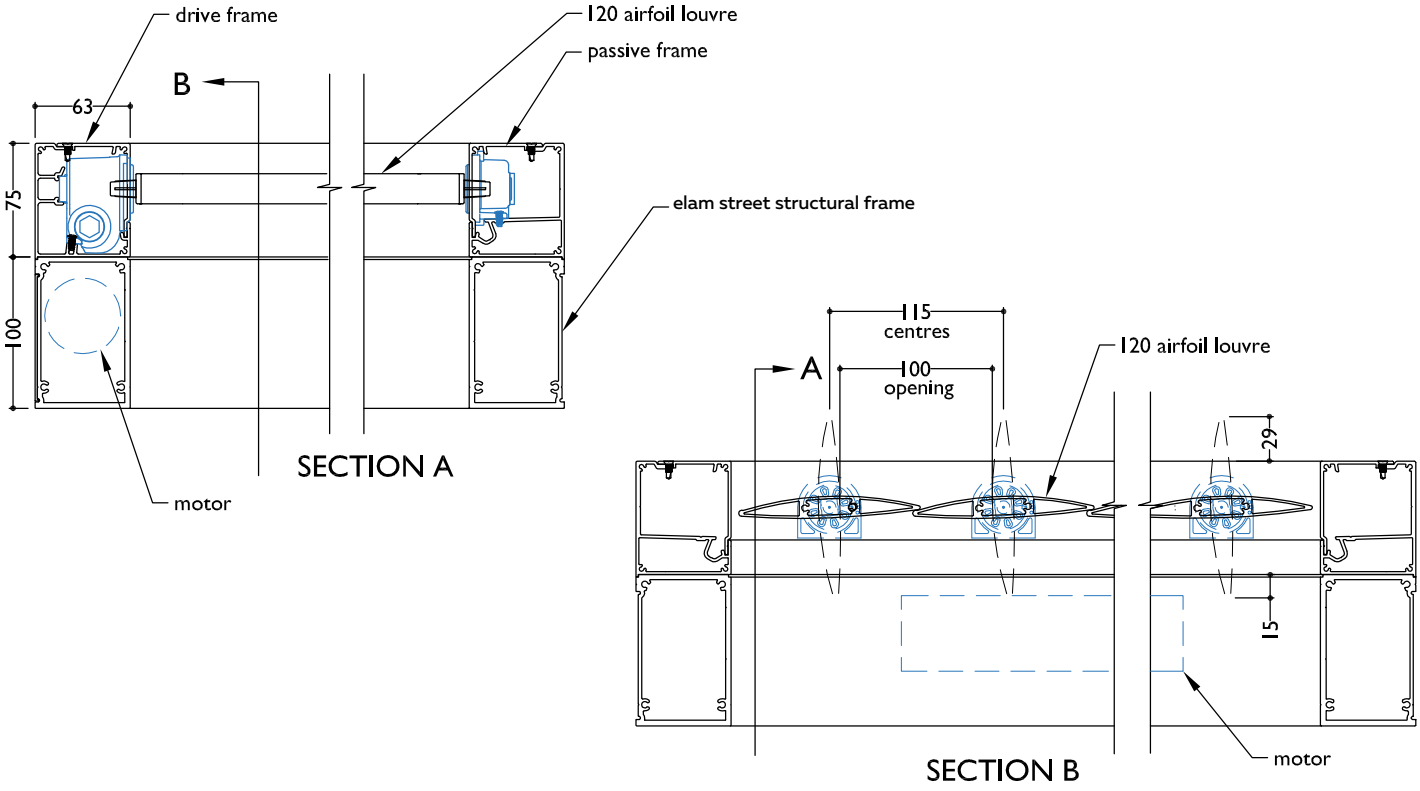


## SECTION - INSERT PANEL FOUR SIDED FRAME HAND OPERABLE SPIRAL PIVOT 120MM AIRFOIL LOUVRE - MOTORISED 120MM AIRFOIL LOUVRE SPIRAL PIVOT ON ELAM STREET STRUCTURAL FRAME

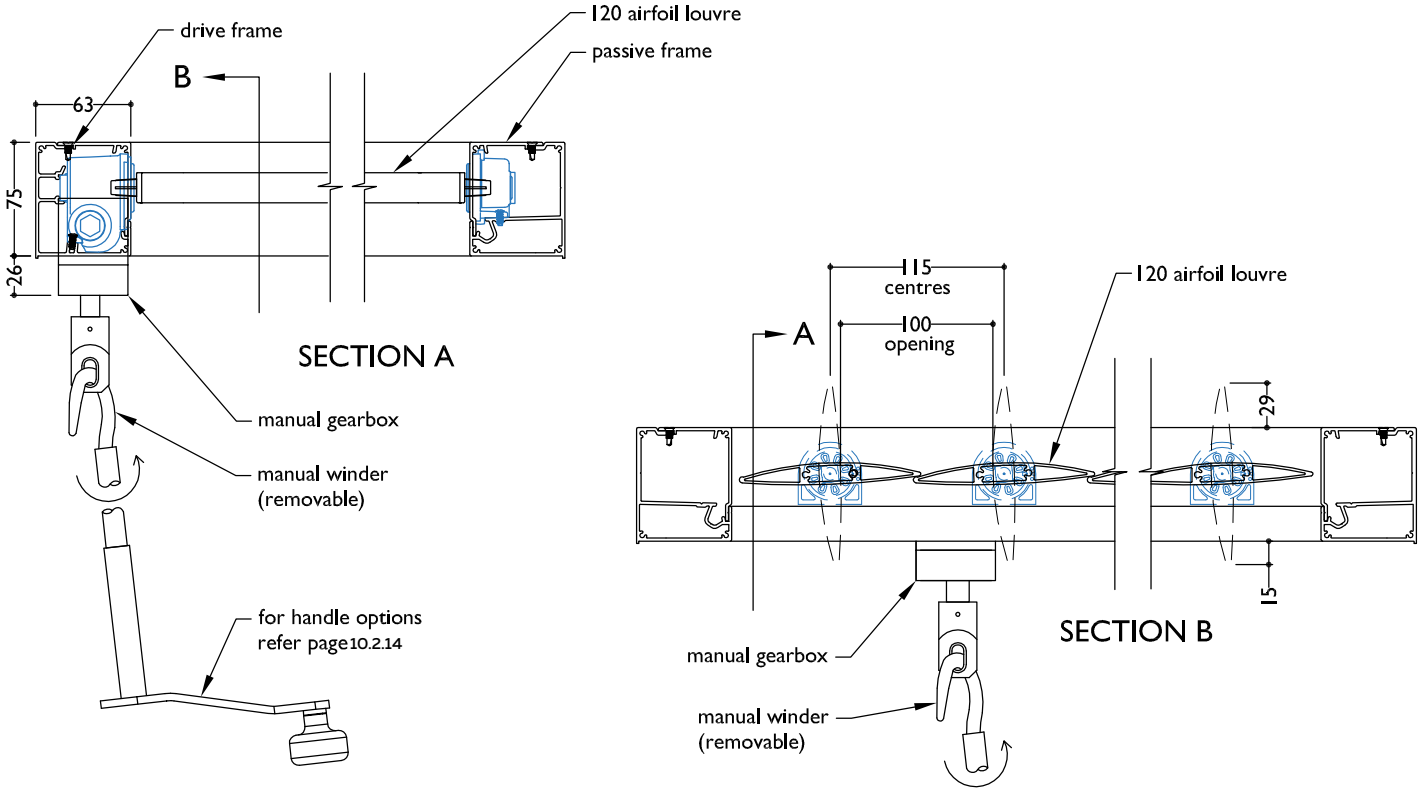



©Louvretec 2025 - All Rights Reserved. Technical specifications subject to change without notice.

## SUN LOUVRES **SPIRAL PIVOT**



### BLADE SPECIFICATIONS **180MM AIRFOIL LOUVRE**

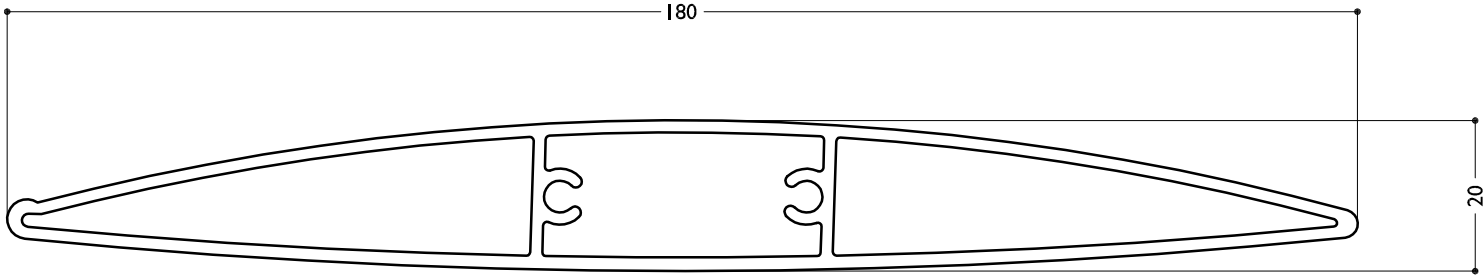


| BLADE SPECIFICATIONS | | | |
|---|---|---|---|
| Blade cover - opening system | 169 mm | Weight per linear metre - opening system | 1.85 kg/lm |
| Weight per square metre - opening system | 11 kg/sqm | Actual blade width | 180 mm |
| Blade centres - opening system | 169 mm | | |

### SPANS AT A GLANCE

Refer Engineering Section. Climate, terrain, shielding, location, type of structure contribute to determine spans.

| WIND ZONE | INSIDE | LOW | MEDIUM | HIGH | VERY HIGH | EXTRA HIGH |
|---|---|---|---|---|---|---|
| Factored wind speed at building | Self wt | 32 m/s<br>115 km/hr | 37m/s<br>133 km/hr | 44 m/s<br>158 km/hr | 50 m/s<br>179 km/hr | 55 m/s<br>198 km/hr |
| Adjustable & Fixed, Horizontal & Vertical | 3100 | 2950 | 2700 | 2400 | 2200 | 2050 |

### INSTALLATION OPTIONS

### SPIRAL PIVOT SYSTEM: CALCULATE OPTIMUM FRAME OPENING SIZES

Width: Check engineering limits

Height: Calculation example showing 17 blades

| STEP 1 | |
|---|---|
| 16 blades x 169 | 2704 |
| 1 blade at 180 | 180 |
| 17 blades | =2884 |

| STEP 2 | |
|---|---|
| Blade cover | 2884 |
| + top and bottom closing angles allow for | |
| 5mm + 5mm | 10 |
| Total exact opening height | =2894* |

*This is inside measure - not outer frame size

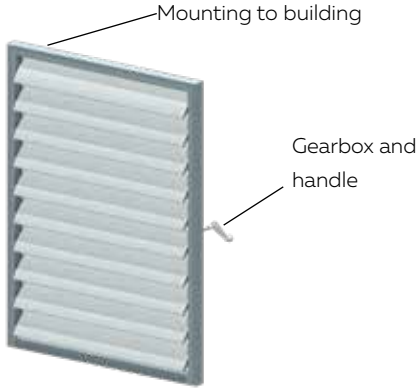


ELAM STREET STRUCTURAL FRAME
VERTICAL PANEL - HAND OPERABLE HORIZONTAL BLADES



©Louvretec 2025 – All Rights Reserved. Technical specifications subject to change without notice.

## SECTION - MOTORISED 180MM AIRFOIL LOUVRE SPIRAL PIVOT ON ELAM STREET STRUCTURAL FRAME

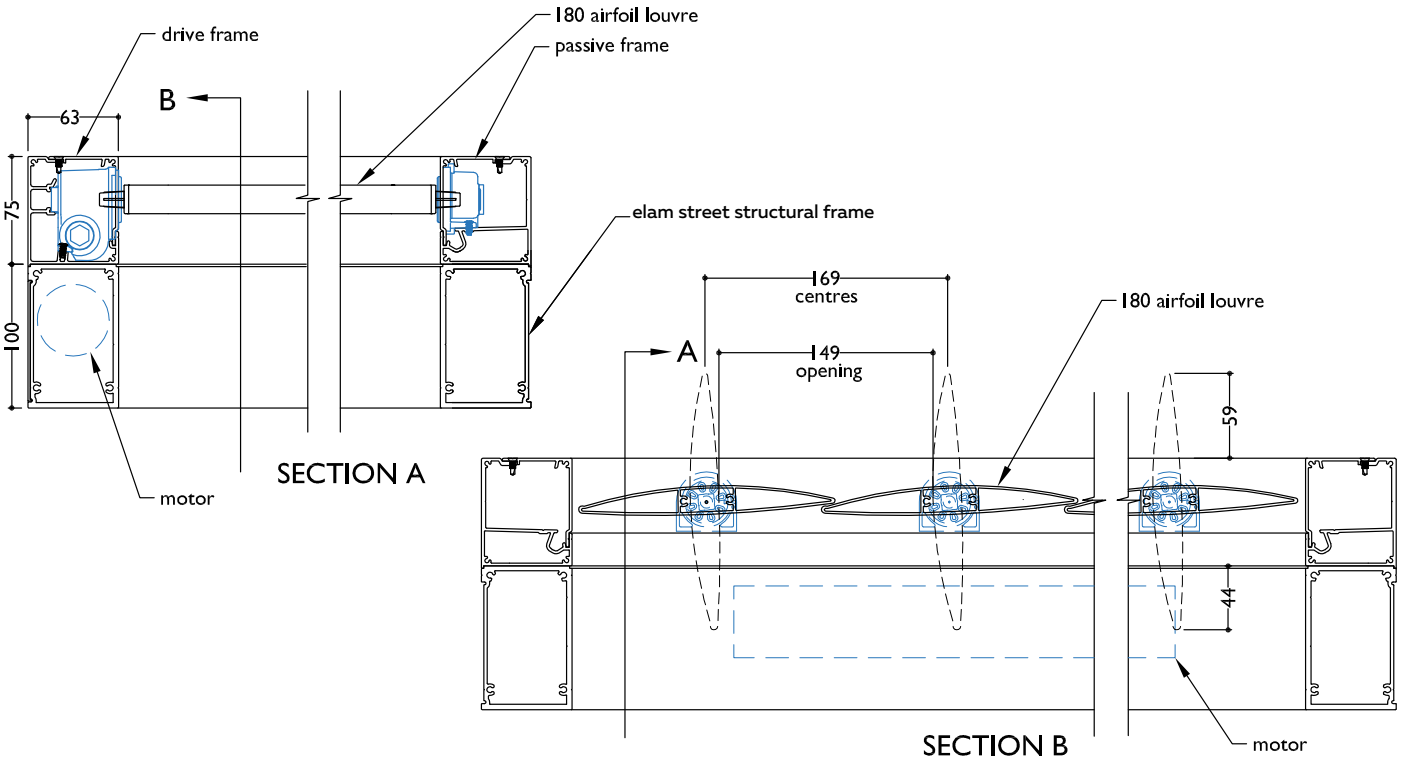


## SECTION - MANUALLY OPERABLE 180MM AIRFOIL LOUVRE SPIRAL PIVOT INSERT PANEL FOUR SIDED FRAME

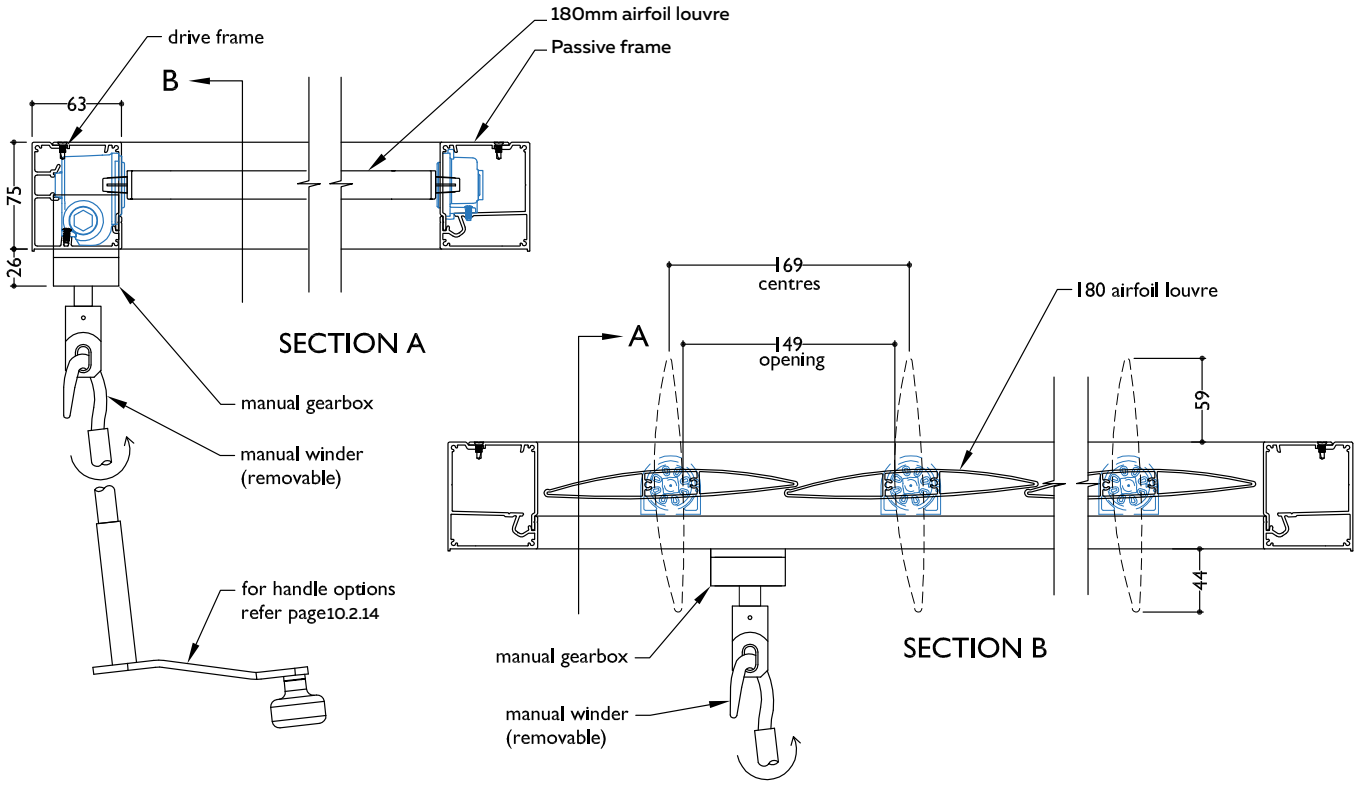



©Louvretec 2025 - All Rights Reserved. Technical specifications subject to change without notice.

# 150MM MIDI LOUVRE

Wave shaped louvre

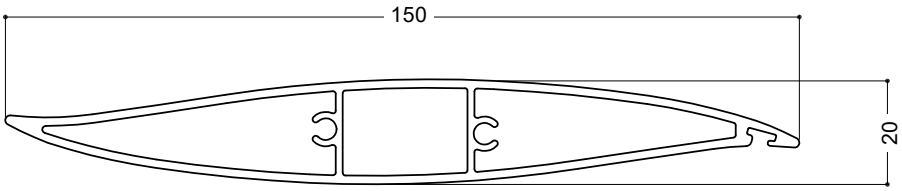


NTS



150MM MIDI LOUVRE

REFER TECHNICAL DETAILS PAGES 10.2.23

# 200MM MAXI LOUVRE

Most specified Maxi Louvre

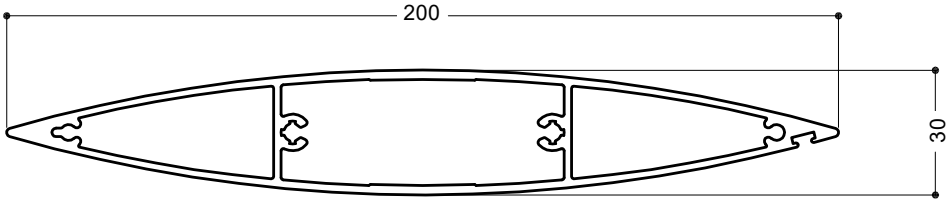


NTS



200MM MAXI LOUVRE

REFER TECHNICAL DETAILS PAGES 10.2.25



©Louvretec 2025 – All Rights Reserved. Technical specifications subject to change without notice.



## BLADE SPECIFICATIONS **150MM MIDI LOUVRE**

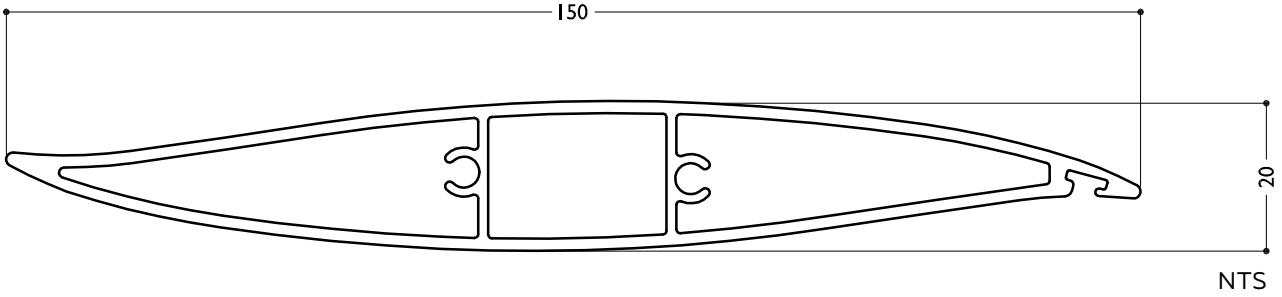


| BLADE SPECIFICATIONS | | | |
|---|---|---|---|
| Blade cover - opening system | 138 mm | Weight per linear metre - opening system | 1.47 kg/lm |
| Weight per square metre - opening system | 10.7 kg/sqm | Actual blade width | 150 mm |
| Blade centres - opening system | 138 mm | | |

### SPANS AT A GLANCE

Refer Engineering Section. Climate, terrain, shielding, location, type of structure contribute to determine spans.

| WIND ZONE | INSIDE | LOW | MEDIUM | HIGH | VERY HIGH | EXTRA HIGH |
|---|---|---|---|---|---|---|
| Factored wind speed at building | Self wt | 32 m/s<br>115 km/hr | 37m/s<br>133 km/hr | 44 m/s<br>158 km/hr | 50 m/s<br>179 km/hr | 55 m/s<br>198 km/hr |
| Adjustable & Fixed, Horizontal & Vertical | 2900 | 2750 | 2500 | 2200 | 2000 | 1900 |

### INSTALLATION OPTIONS

**SPIRAL PIVOT SYSTEM: CALCULATE OPTIMUM FRAME OPENING SIZES**

Width: Check engineering limits

Height: Calculation example showing 17 blades

| | |
|---|---|
| STEP 1 | |
| 16 blades x 138 | 2208 |
| 1 blade at 150 | 150 |
| 17 blades | =2358 |
| STEP 2 | |
| Blade cover | 2358 |
| + top and bottom closing angles allow for 5mm + 5mm | 10 |
| Total exact opening height | =2368* |

*This is inside measure - not outer frame size

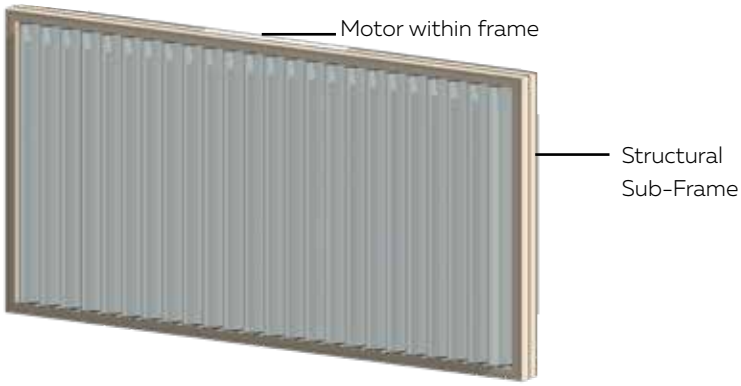


ELAM STREET STRUCTURAL FRAME WITH SUB-FRAME VERTICAL PANEL - VERTICAL BLADES

©Louvretec 2025 - All Rights Reserved. Technical specifications subject to change without notice.

**TYPICAL DETAIL: SPIRAL PIVOT SYSTEM**
**150MM MIDI LOUVRE**

SECTION - MOTORISED 150MM MIDI LOUVRE SPIRAL PIVOT ON ELAM STREET STRUCTURAL FRAME

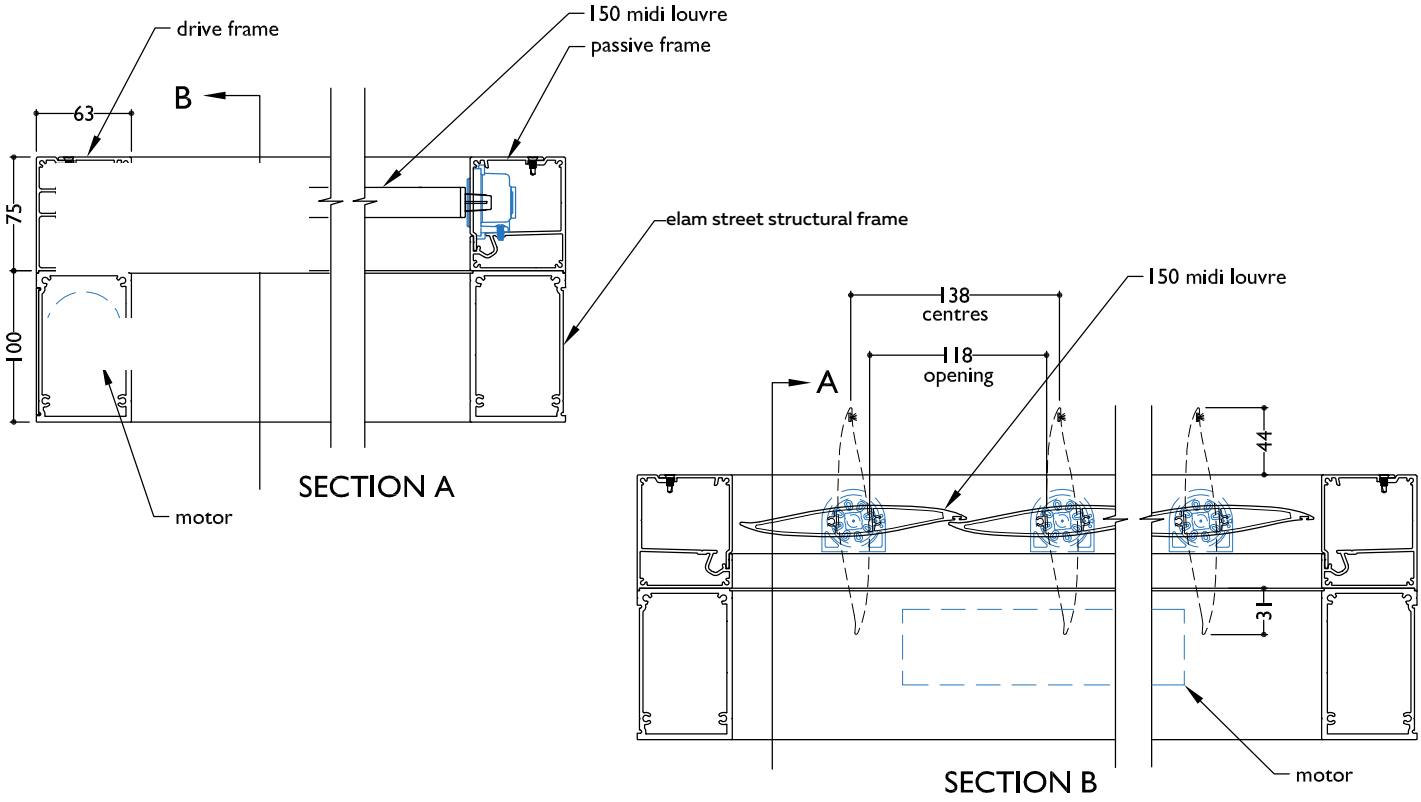


SECTION - MANUALLY OPERABLE 150MM MIDI LOUVRE SPIRAL PIVOT INSERT PANEL - FOUR SIDED FRAME

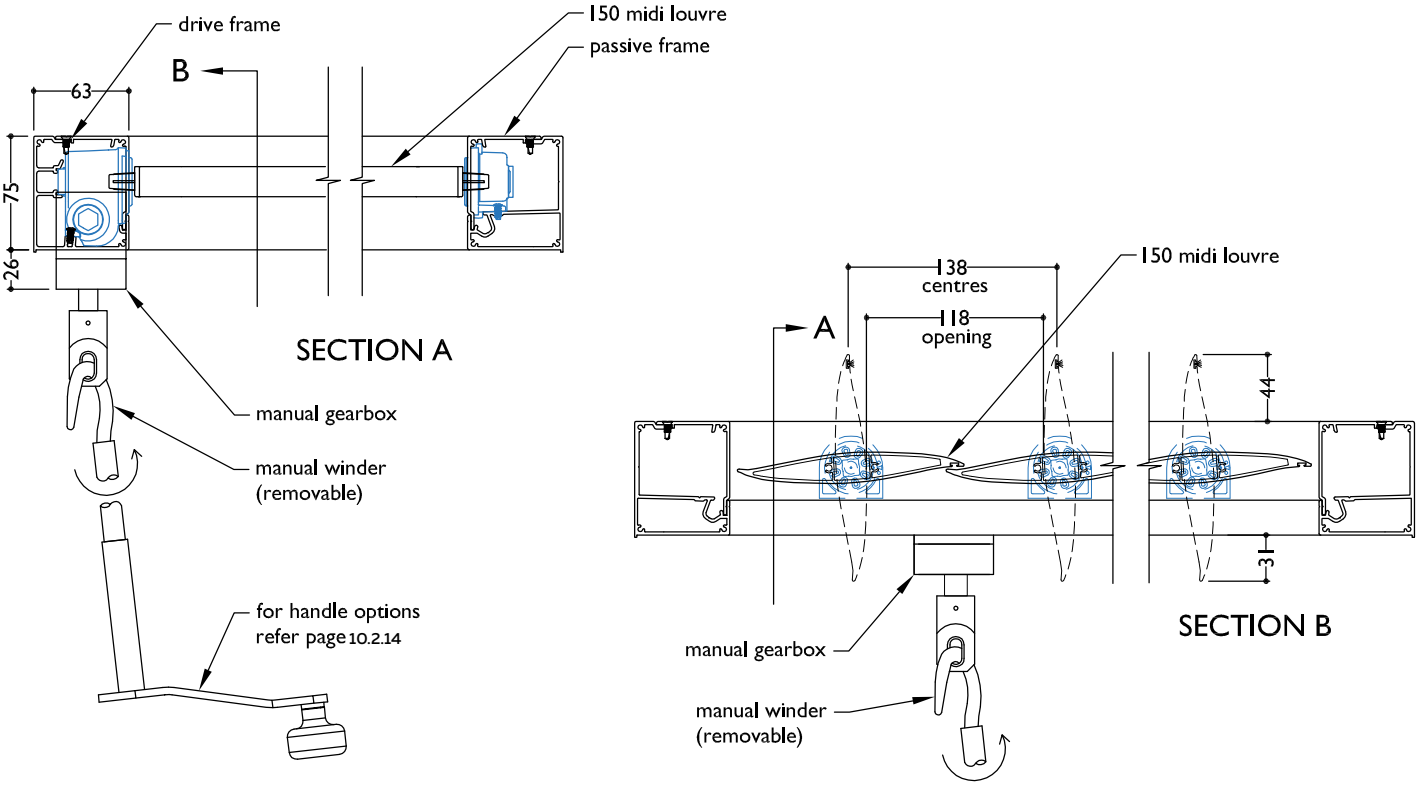




FILE: SUN LOUVRES Spiral Pivot 10.2.24 DATE MODIFIED: 01/10/2024 SCALE:

www.louvretec.co.nz www.louvretec.com.au
©Louvretec 2025 - All Rights Reserved. Technical specifications subject to change without notice.



## BLADE SPECIFICATIONS 200MM MAXI LOUVRE

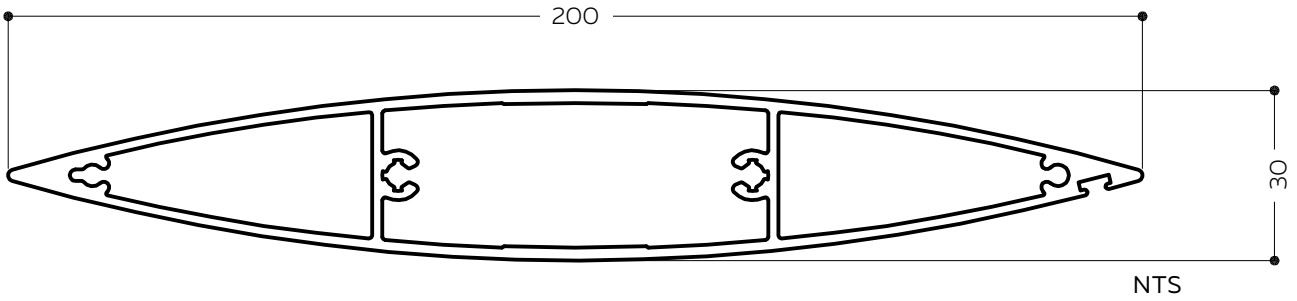


| BLADE SPECIFICATIONS | | | |
|---|---|---|---|
| Blade cover - opening system | 188 mm | Weight per linear metre - opening system | 2.75 kg/lm |
| Weight per square metre - opening system | 14.63 kg/sqm | Actual blade width | 200 mm |
| Blade centres - opening system | 188 mm | | |

## SPANS AT A GLANCE

Refer Engineering Section. Climate, terrain, shielding, location, type of structure contribute to determine spans.

| WIND ZONE | INSIDE | LOW | MEDIUM | HIGH | VERY HIGH | EXTRA HIGH |
|---|---|---|---|---|---|---|
| Factored wind speed at building | Self wt | 32 m/s<br>115 km/hr | 37m/s<br>133 km/hr | 44 m/s<br>158 km/hr | 50 m/s<br>179 km/hr | 55 m/s<br>198 km/hr |
| Adjustable & Fixed, Horizontal & Vertical | 3700 | 3700 | 3550 | 2950 | 2600 | 2350 |

## INSTALLATION OPTIONS

### SPIRAL PIVOT SYSTEM: CALCULATE OPTIMUM FRAME OPENING SIZES

Width: Check engineering limits

Height: Calculation example showing 17 blades

STEP 1

| | |
|---|---|
| 16 blades x 188 | 3008 |
| 1 blade at 200 | 200 |
| 17 blades | =3208 |

STEP 2

Blade cover
+ top and bottom closing
angles allow for

| | |
|---|---|
| 5mm + 5mm | 10 |
| Total exact opening height = | 3218* |

*This is inside measure - not outer frame size




ELAM STREET STRUCTURAL FRAME
VERTICAL PANEL - HAND OPERABLE HORIZONTAL BLADES

©Louvretec 2025 - All Rights Reserved. Technical specifications subject to change without notice.

**TYPICAL DETAIL: SPIRAL PIVOT SYSTEM**
**200MM MAXI LOUVRE**

SECTION - MOTORISED 200MM MAXI LOUVRE SPIRAL PIVOT ON ELAM STREET STRUCTURAL FRAME

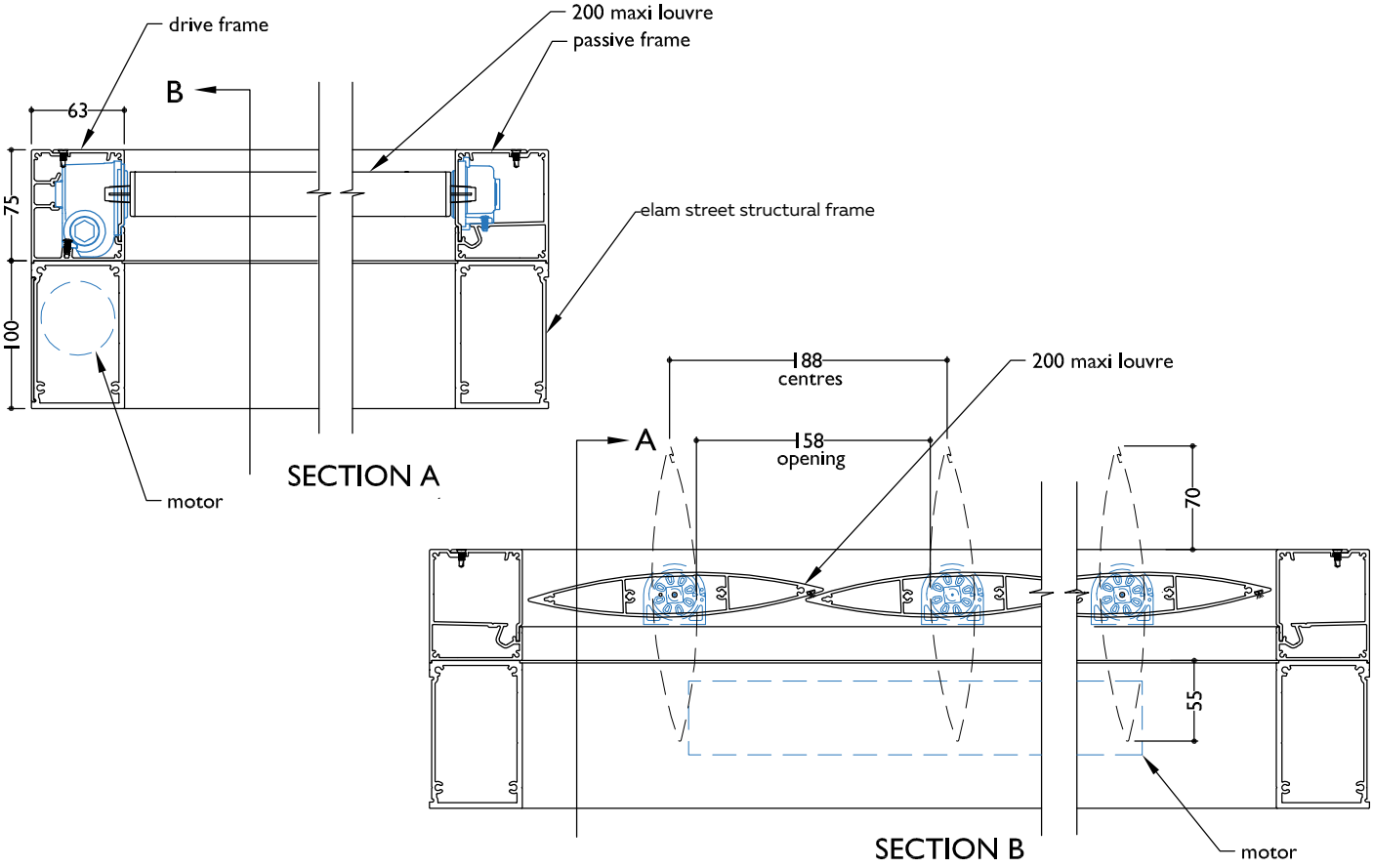


SECTION - MOTORISED 200MM MAXI LOUVRE SPIRAL PIVOT WITH TOP MOUNTED MOTOR INSERT PANEL FOUR SIDED FRAME

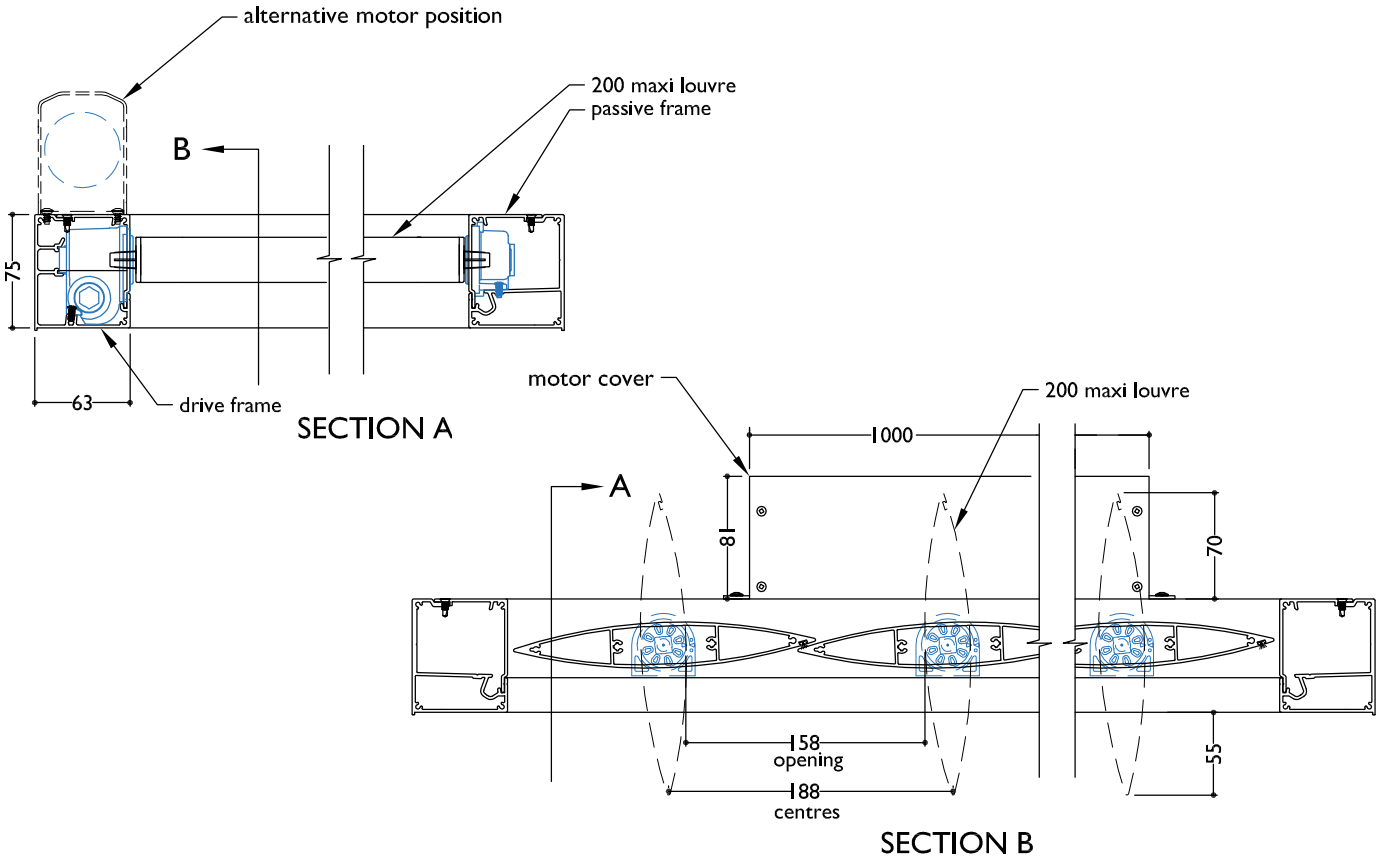




FILE: SUN LOUVRES Spiral Pivot 10.2.26 DATE MODIFIED: 01/10/2024 SCALE:

www.louvretec.co.nz www.louvretec.com.au

©Louvretec 2025 - All Rights Reserved. Technical specifications subject to change without notice.

SECTION - MANUALLY OPERABLE 200MM MAXI LOUVRE USING SPIRAL PIVOT SYSTEM
ON ELAM STREET STRUCTURAL FRAME

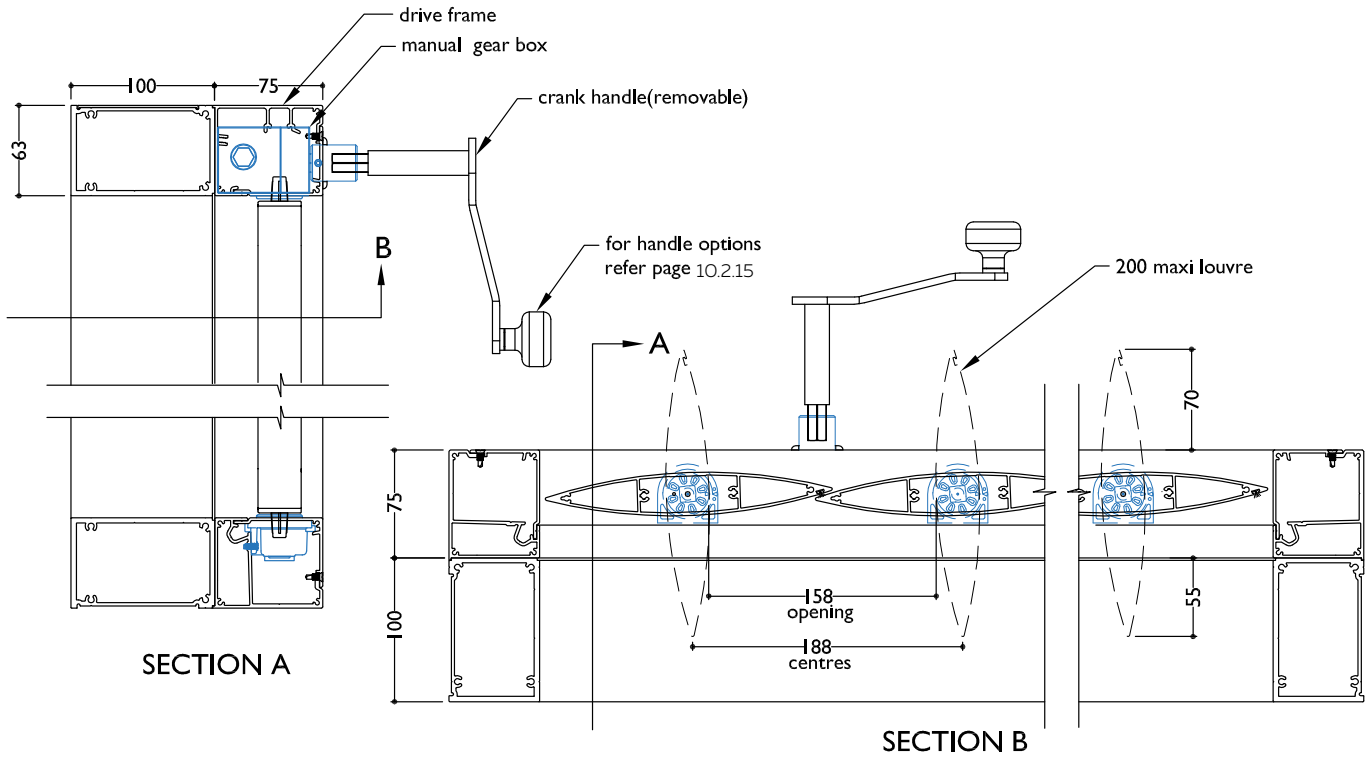


SECTION - MANUALLY OPERABLE 200MM MAXI LOUVRE USING SPIRAL PIVOT SYSTEM
INSERT PANEL - FOUR SIDED FRAME

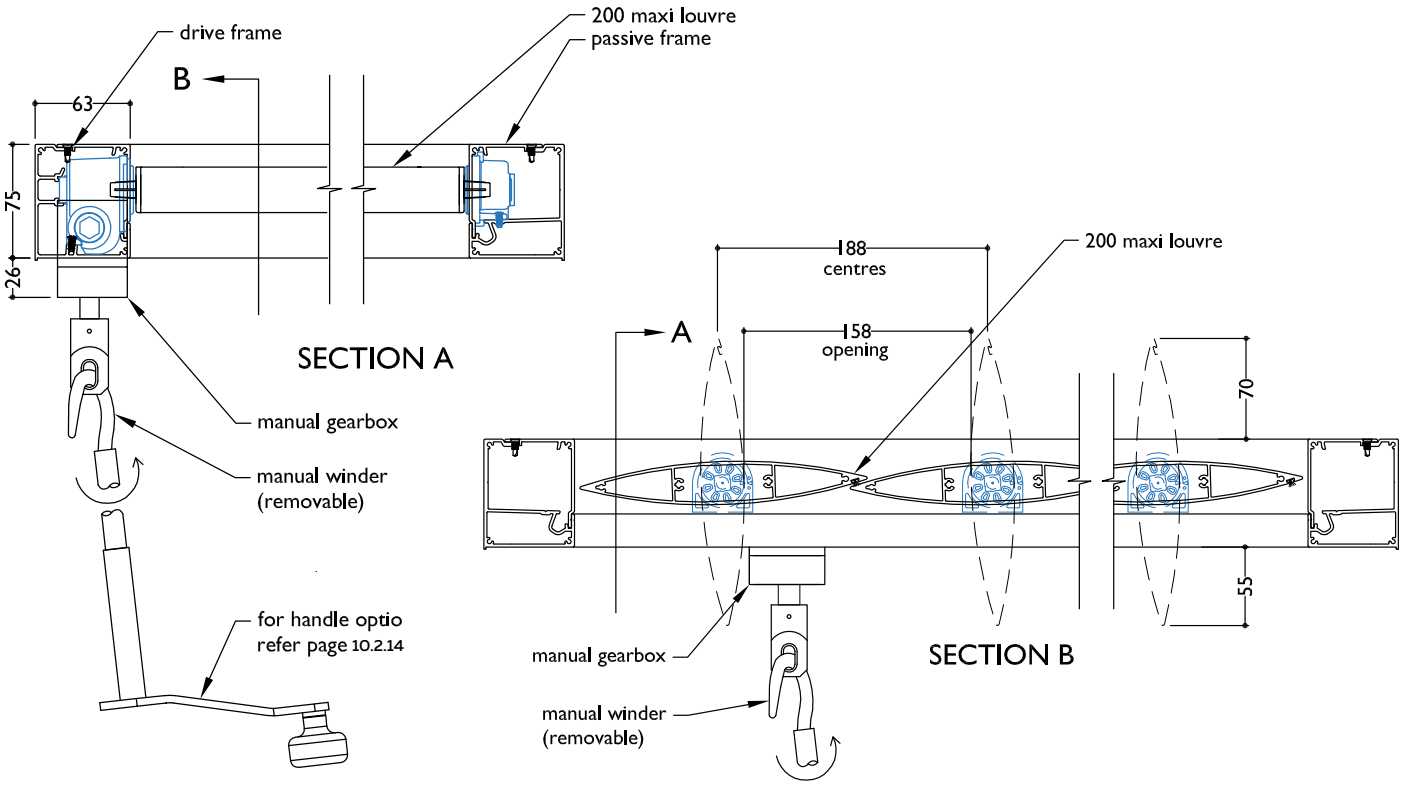



©Louvretec 2025 - All Rights Reserved. Technical specifications subject to change without notice.

# MOTORISED & HAND OPERABLE INSERT PANELS RECTANGULAR LOUVRES

Compatible Louvres: 120 Flush Mini, 180 Flush Midi, 200 Flush Maxi

## 120MM FLUSH MINI

Wall Panel / Sun Louvre / Balustrade

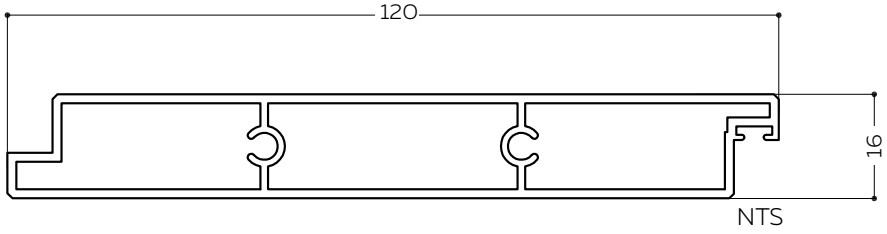




120MM FLUSH MINI LOUVRE
CENTRE PIVOT

REFER TECHNICAL DETAILS PAGES 10.2.29

## 180MM FLUSH MIDI

Wall Panel / Sun Louvre / Balustrade

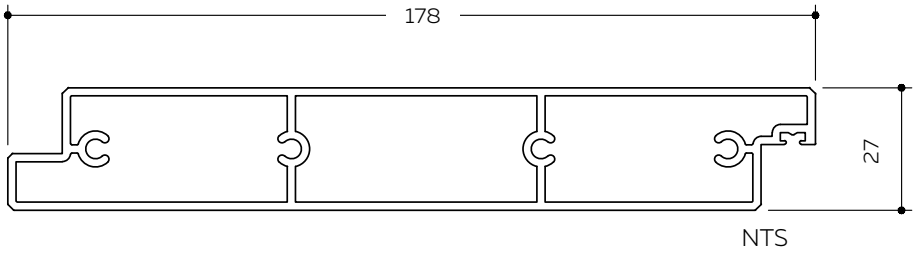




180MM FLUSH MIDI LOUVRE
CENTRE PIVOT

REFER TECHNICAL DETAILS PAGES 10.2.31

## 200MM FLUSH MAXI

Wall Panel / Sun Louvre / Balustrade

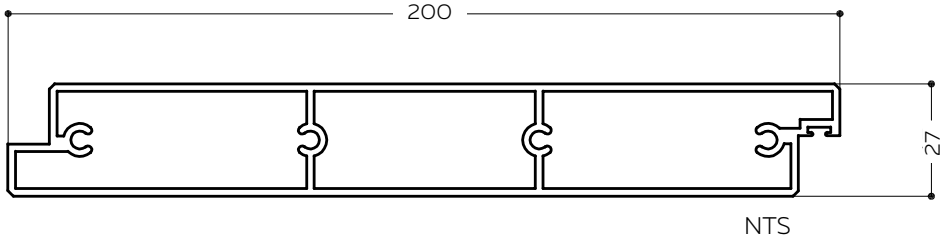




200MM FLUSH MAXI
CENTRE PIVOT



200MM FLUSH MAXI
REAR PIVOT

REFER TECHNICAL DETAILS PAGES 10.2.33



©Louvretec 2025 – All Rights Reserved. Technical specifications subject to change without notice.



## BLADE SPECIFICATIONS **120MM FLUSH MINI**

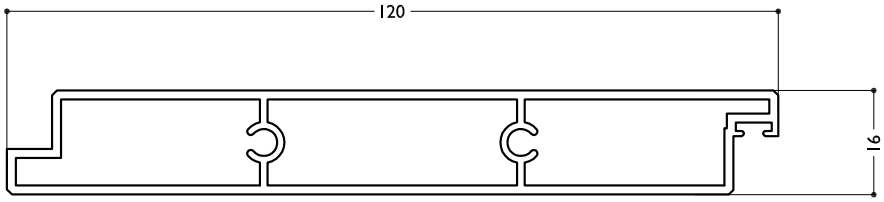


NTS

| BLADE SPECIFICATIONS | | | |
|---|---|---|---|
| Blade cover - opening system | 115 mm | Weight per linear metre - opening system | 0.86 kg/lm |
| Weight per square metre - opening system | 8 kg/sqm | Actual blade width | 120 mm |
| Blade centres - opening system | 115 mm | | |

### SPANS AT A GLANCE

Refer Engineering Section. Climate, terrain, shielding, location, type of structure contribute to determine spans.

| WIND ZONE | INSIDE | LOW | MEDIUM | HIGH | VERY HIGH | EXTRA HIGH |
|---|---|---|---|---|---|---|
| Factored wind speed at building | Self wt | 32 m/s<br>115 km/hr | 37m/s<br>133 km/hr | 44 m/s<br>158 km/hr | 50 m/s<br>179 km/hr | 55 m/s<br>198 km/hr |
| Adjustable & Fixed, Horizontal & Vertical | 2600 | 2500 | 2300 | 2050 | 1900 | 1750 |

### INSTALLATION OPTIONS

### SPIRAL PIVOT SYSTEM: CALCULATE OPTIMUM FRAME OPENING SIZES

Width: Check engineering limits

Height: Calculation example showing 18 blades

| | |
|---|---|
| STEP 1 | |
| 16 blades x 115 | 1955 |
| 1 blade at 120 | 120 |
| 17 blades | =2075 |
| STEP 2 | |
| Blade cover | 2075 |
| + top and bottom closing angles allow for | |
| 5mm + 5mm | 10 |
| Total exact opening height | =2085* |

*This is inside measure - not outer frame size

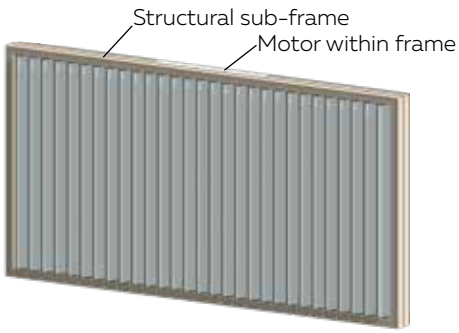


ELAM STREET STRUCTURAL FRAME WITH SUB-FRAME VERTICAL PANEL - VERTICAL BLADES

©Louvretec 2025 - All Rights Reserved. Technical specifications subject to change without notice.

**TYPICAL DETAIL: SPIRAL PIVOT SYSTEM**
**120MM FLUSH MINI - ELAM STREET STRUCTURAL FRAME**

SECTION - SPIRAL PIVOT SYSTEM MOTORISED - 120 MINI PANEL IN ELAM STREET STRUCTURAL FRAME

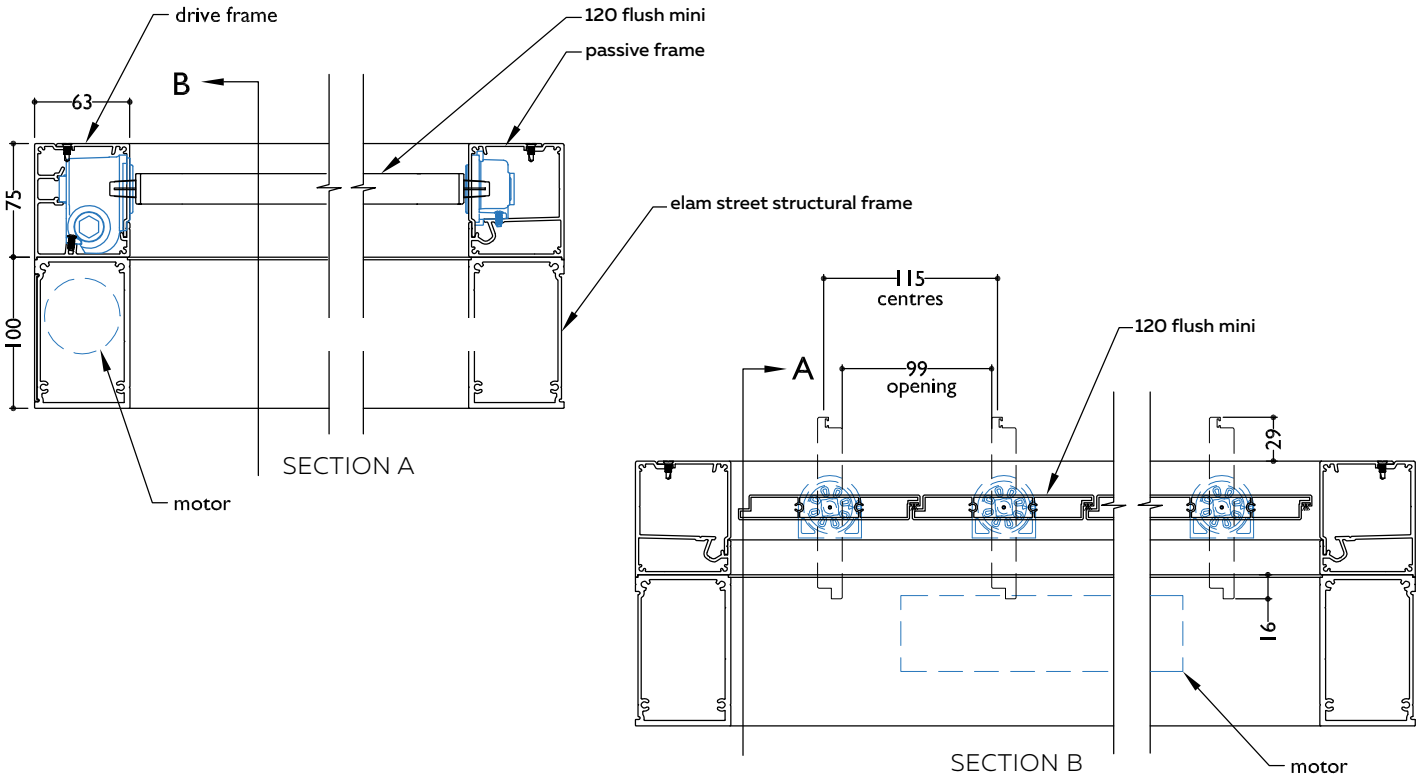


SECTION - SPIRAL PIVOT SYSTEM HAND OPERABLE - 120 FLUSH MINI INSERT IN TO FOUR SIDED FRAME

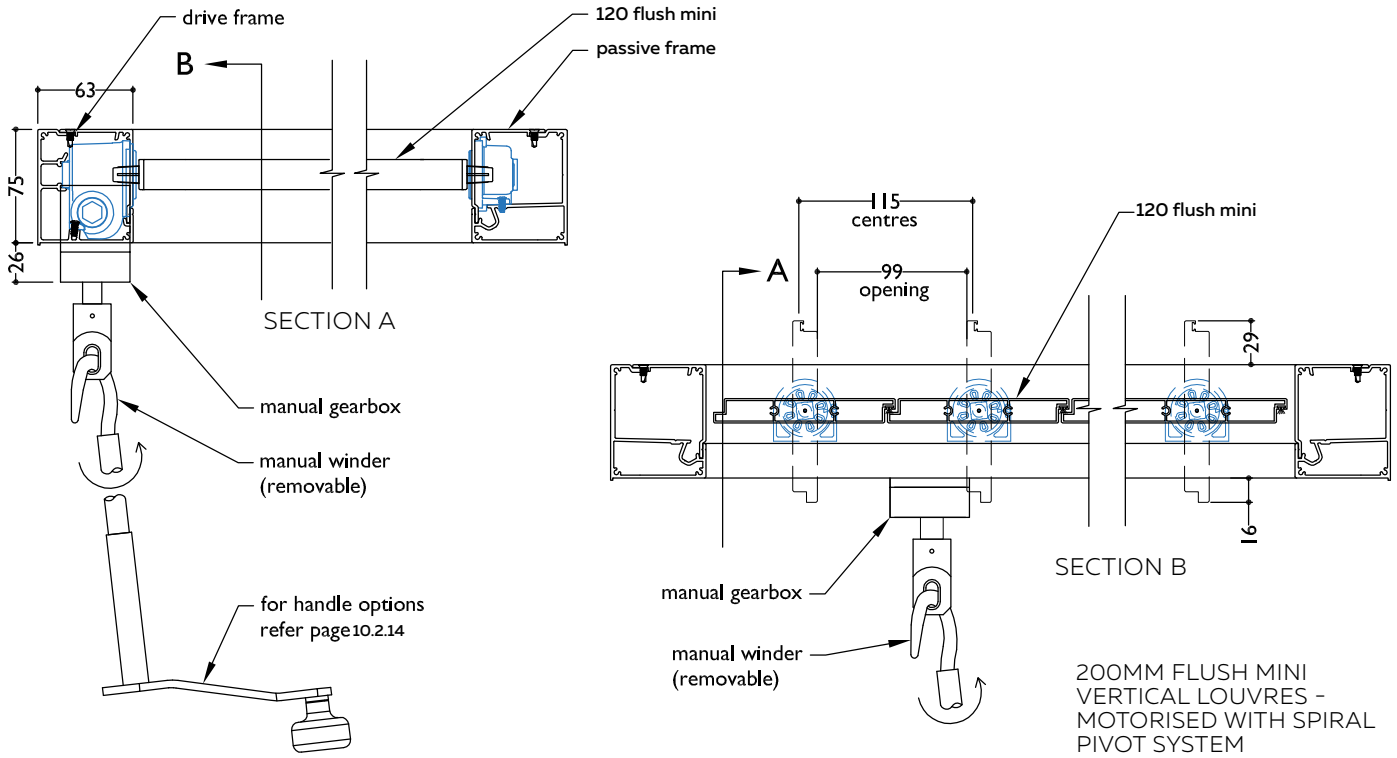


200MM FLUSH MINI VERTICAL LOUVRES - MOTORISED WITH SPIRAL PIVOT SYSTEM





©Louvretec 2025 - All Rights Reserved. Technical specifications subject to change without notice.



## BLADE SPECIFICATIONS **180MM FLUSH MIDI**

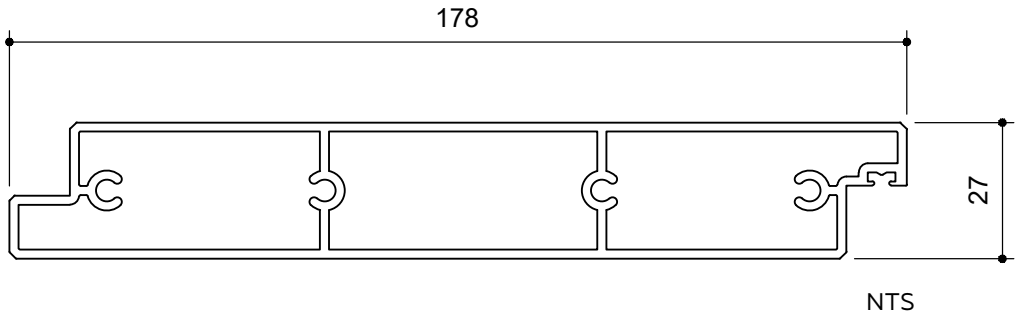


| BLADE SPECIFICATIONS | | | |
|---|---|---|---|
| Blade cover - opening system | 169 mm | Weight per linear metre - opening system | 2.44 kg/lm |
| Weight per square metre - opening system | 13.95 kg/sqm | Actual blade width | 178 mm |
| Blade centres - opening system | 169 mm | | |

### SPANS AT A GLANCE

Refer Engineering Section. Climate, terrain, shielding, location, type of structure contribute to determine spans.

| WIND ZONE | INSIDE | LOW | MEDIUM | HIGH | VERY HIGH | EXTRA HIGH |
|---|---|---|---|---|---|---|
| Factored wind speed at building | Self wt | 32 m/s<br>115 km/hr | 37m/s<br>133 km/hr | 44 m/s<br>158 km/hr | 50 m/s<br>179 km/hr | 55 m/s<br>198 km/hr |
| Adjustable & Fixed, Horizontal & Vertical | 3500 | 3350 | 3000 | 2650 | 2450 | 2250 |

### INSTALLATION OPTIONS

### SPIRAL PIVOT SYSTEM: CALCULATE OPTIMUM FRAME OPENING SIZES

Width: Check engineering limits

Height: Calculation example showing 17 blades

| | |
|---|---|
| STEP 1 | |
| 16 blades x 169 | 2704 |
| 1 blade at 178 | 178 |
| 17 blades | =2882 |
| STEP 2 | |
| Blade cover | 2882 |
| + top and bottom closing angles allow for | |
| 5mm + 5mm | 10 |
| Total exact opening height = | 2892* |

*This is inside measure - not outer frame size

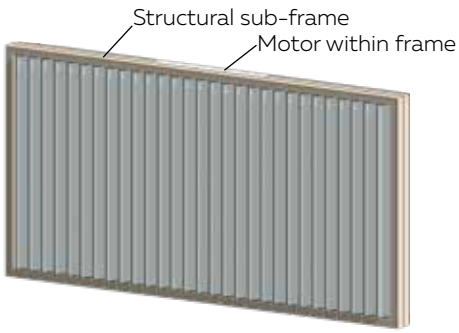


ELAM STREET STRUCTURAL FRAME WITH SUB-FRAME VERTICAL PANEL - VERTICAL BLADES

©Louvretec 2025 - All Rights Reserved. Technical specifications subject to change without notice.

**TYPICAL DETAIL: SPIRAL PIVOT SYSTEM**
**180MM FLUSH MIDI - ELAM STREET STRUCTURAL FRAME**

## SECTION - SPIRAL PIVOT SYSTEM MOTORISED - 180 FLUSH MIDI IN ELAM STREET STRUCTURAL FRAME

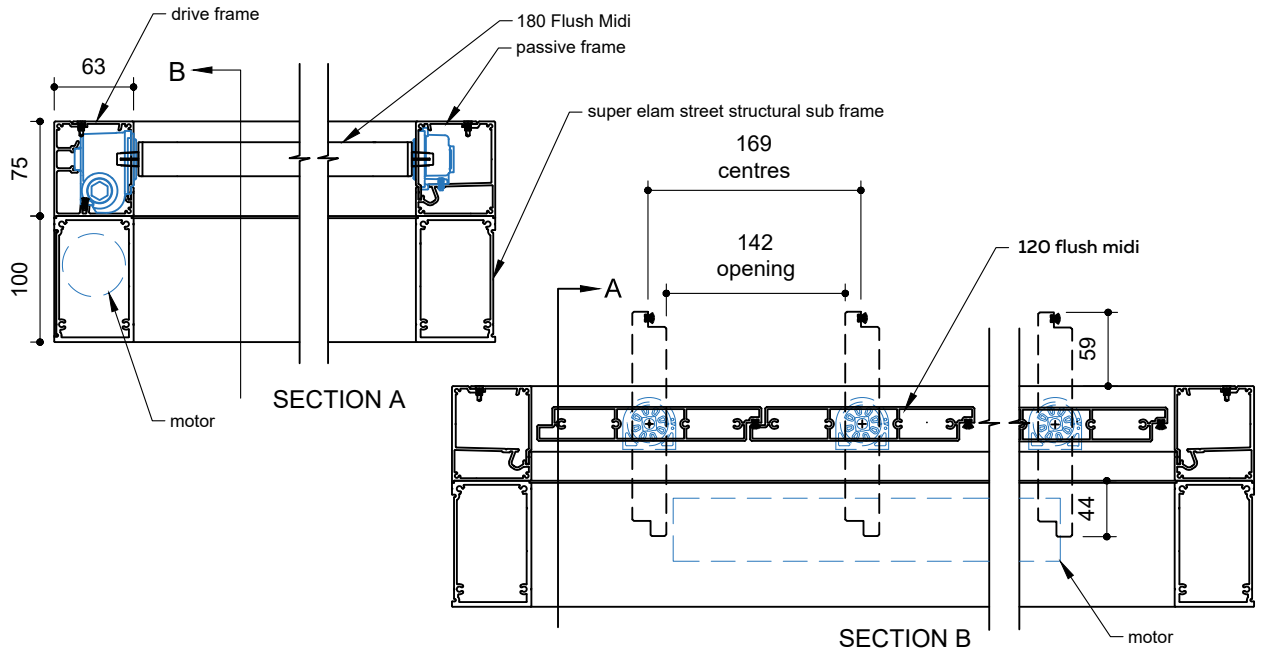


## SECTION - SPIRAL PIVOT SYSTEM HAND OPERABLE - 180 FLUSH MIDI INSERT

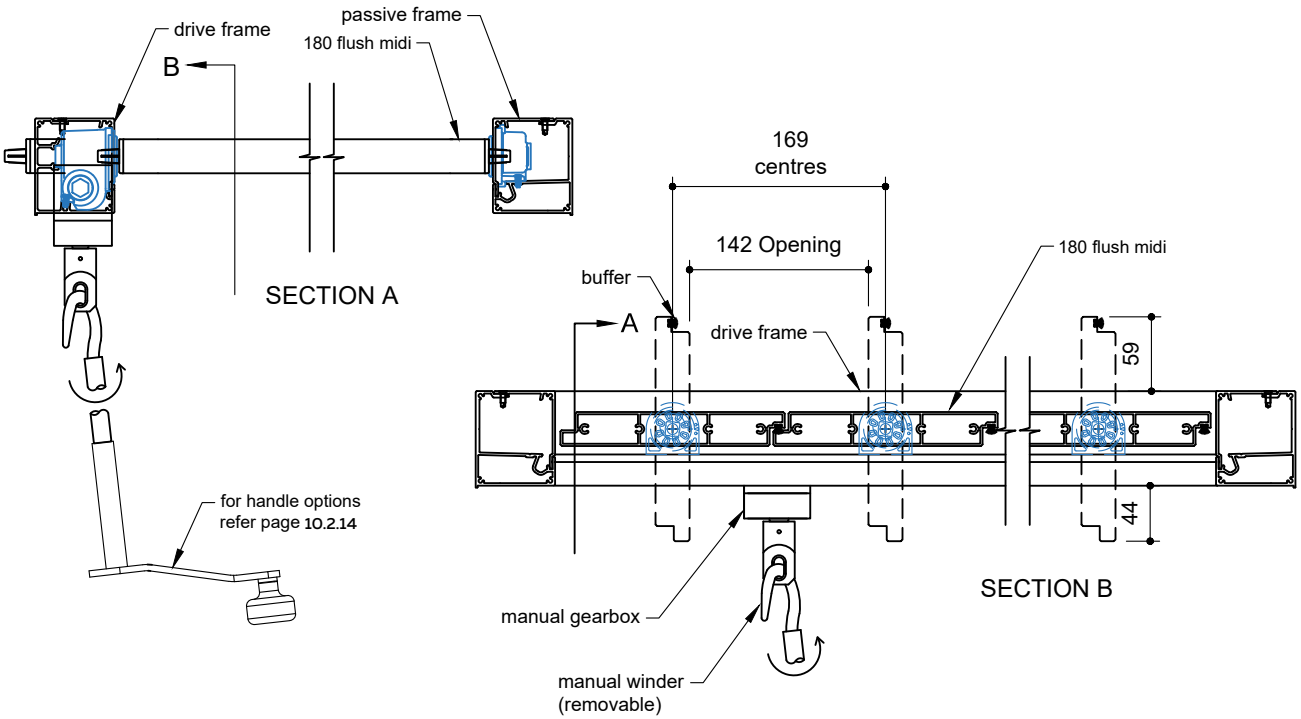




FILE: SUN LOUVRES Spiral Pivot 10.2.32 DATE MODIFIED: 01/10/2024 SCALE:

www.louvretec.co.nz www.louvretec.com.au
©Louvretec 2025 - All Rights Reserved. Technical specifications subject to change without notice.



## BLADE SPECIFICATIONS **200MM FLUSH MAXI**

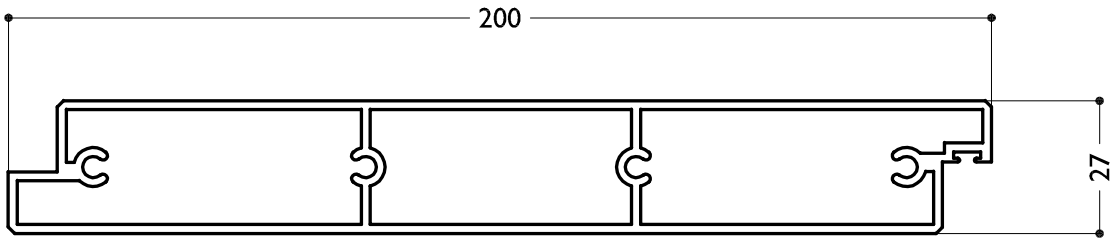


NTS

| BLADE SPECIFICATIONS | | | |
|---|---|---|---|
| Blade cover - opening system | 192 mm | Weight per linear metre - opening system | 2.67 kg/lm |
| Weight per square metre - opening system | 13.95 kg/sqm | Actual blade width | 200 mm |
| Blade centres - opening system | 192 mm | | |

### SPANS AT A GLANCE

Refer Engineering Section. Climate, terrain, shielding, location, type of structure contribute to determine spans.

| WIND ZONE | INSIDE | LOW | MEDIUM | HIGH | VERY HIGH | EXTRA HIGH |
|---|---|---|---|---|---|---|
| Factored wind speed at building | Self wt | 32 m/s<br>115 km/hr | 37m/s<br>133 km/hr | 44 m/s<br>158 km/hr | 50 m/s<br>179 km/hr | 55 m/s<br>198 km/hr |
| Adjustable & Fixed, Horizontal & Vertical | 3500 | 3350 | 3000 | 2650 | 2450 | 2250 |

### INSTALLATION OPTIONS

### SPIRAL PIVOT SYSTEM: CALCULATE OPTIMUM FRAME OPENING SIZES

Width: Check engineering limits

Height: Calculation example showing 17 blades

STEP 1

| | |
|---|---|
| 16 blades x 192crs | 3072 |
| 1 blade at 200 | 200 |
| 17 blades | =3272 |

STEP 2

| | |
|---|---|
| Blade cover | 3272 |
| + top and bottom closing angles allow for | |
| 5mm + 5mm | 10 |
| Total exact opening height = | 3282* |

*This is inside measure - not outer frame size



200 FLUSH MAXI - CENTRE PIVOT



200 FLUSH MAXI - REAR PIVOT

©Louvretec 2025 - All Rights Reserved. Technical specifications subject to change without notice.

**TYPICAL DETAIL: SPIRAL PIVOT SYSTEM**
**200MM FLUSH MAXI - CENTRE PIVOT**

SECTION - CENTRE PIVOT MOTORISED 200 FLUSH MAXI SPIRAL PIVOT ON ELAM STREET STRUCTURAL FRAME WITH SUB-FRAME

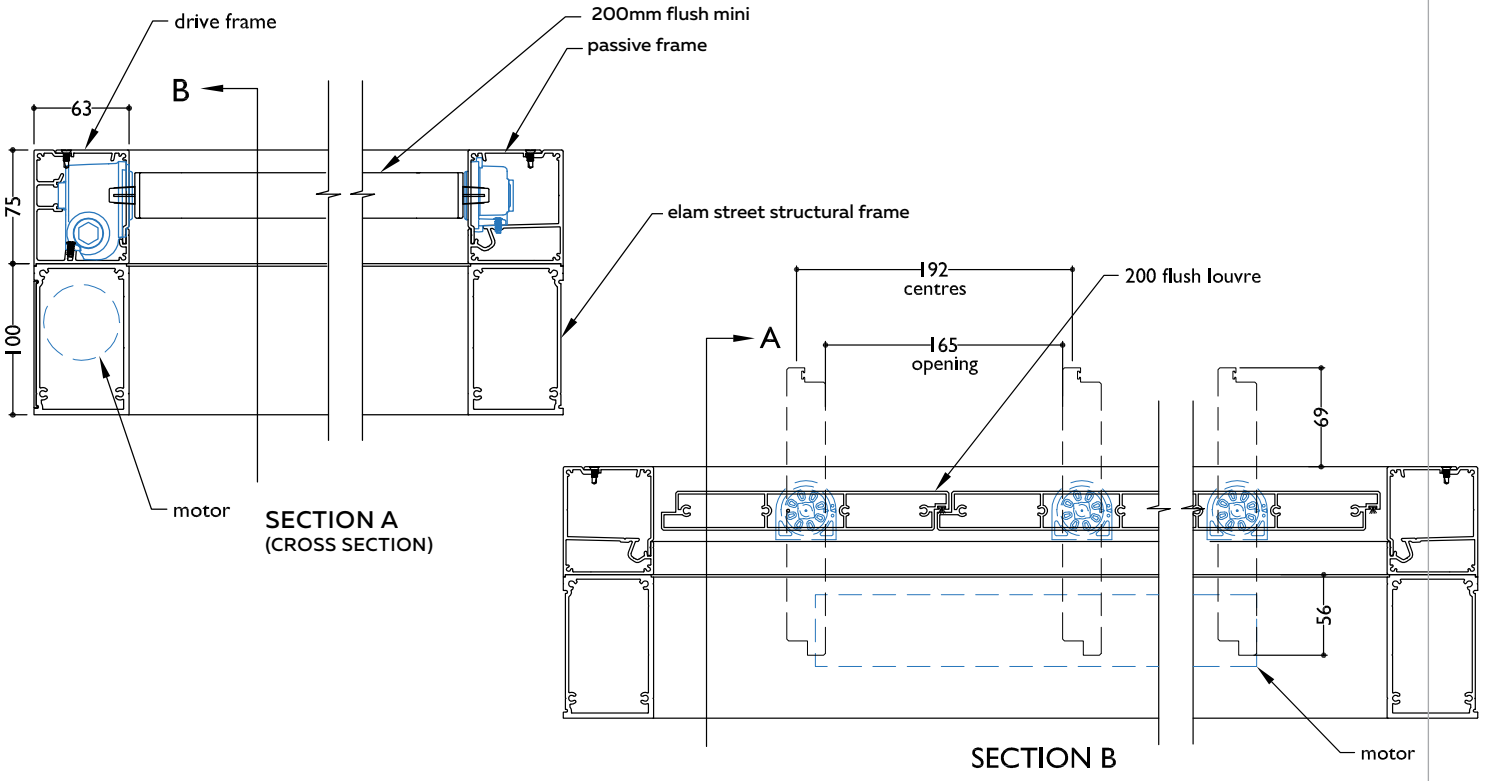


SECTION - CENTRE PIVOT MANUALLY OPERABLE 200 FLUSH MAXI SPIRAL PIVOT INSERT PANEL FOUR SIDED FRAME

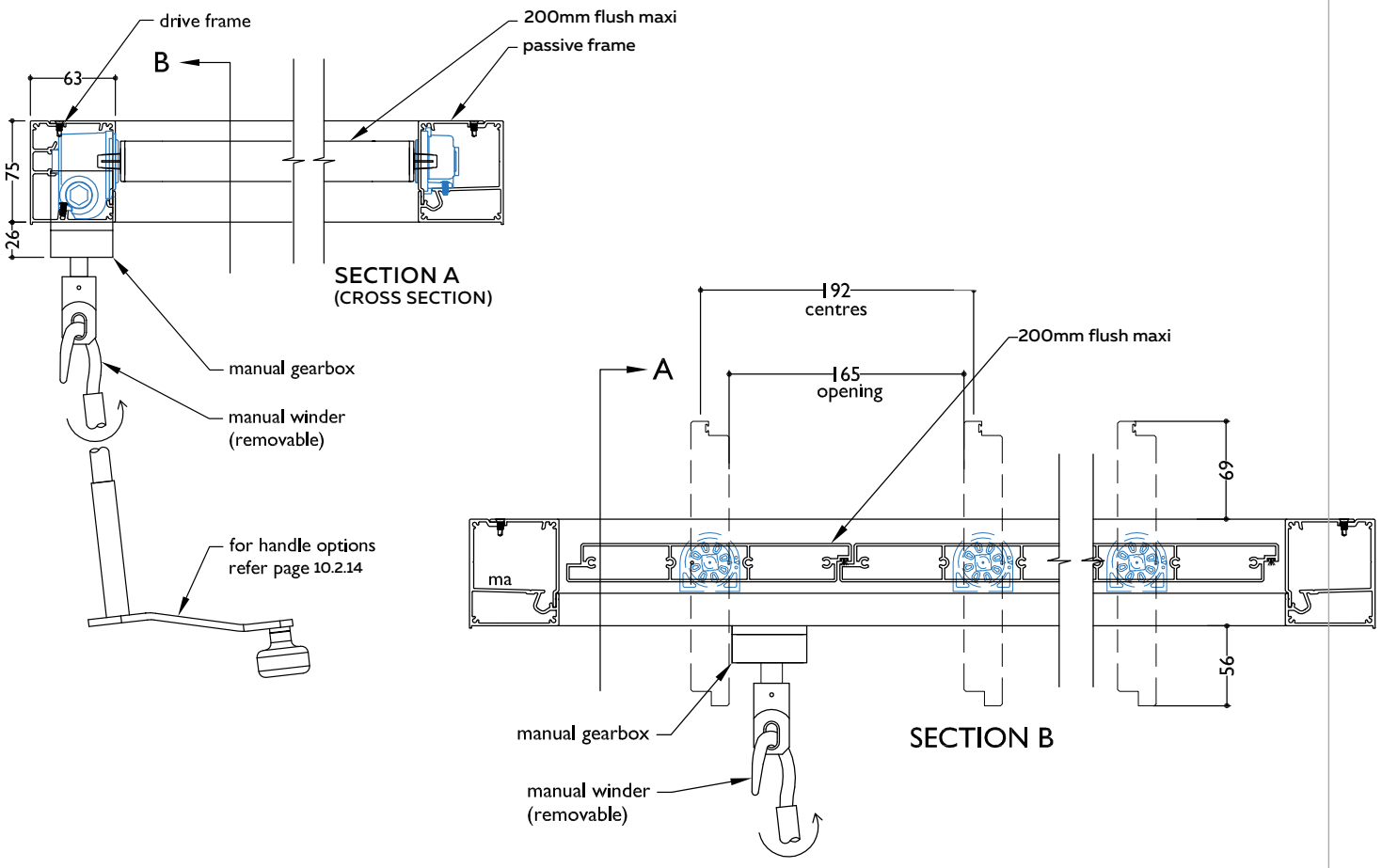




FILE: SUN LOUVRES Spiral Pivot 10.2.34 DATE MODIFIED: 01/10/2024 SCALE:

www.louvretec.co.nz www.louvretec.com.au
©Louvretec 2025 - All Rights Reserved. Technical specifications subject to change without notice.

## SECTION - REAR PIVOT MOTORISED 200 FLUSH MAXI SPIRAL PIVOT ON ELAM STREET STRUCTURAL FRAME

VERTICAL ONLY
THE REAR PIVOT
200 FLUSH LOUVRE
IS VERTICAL ONLY

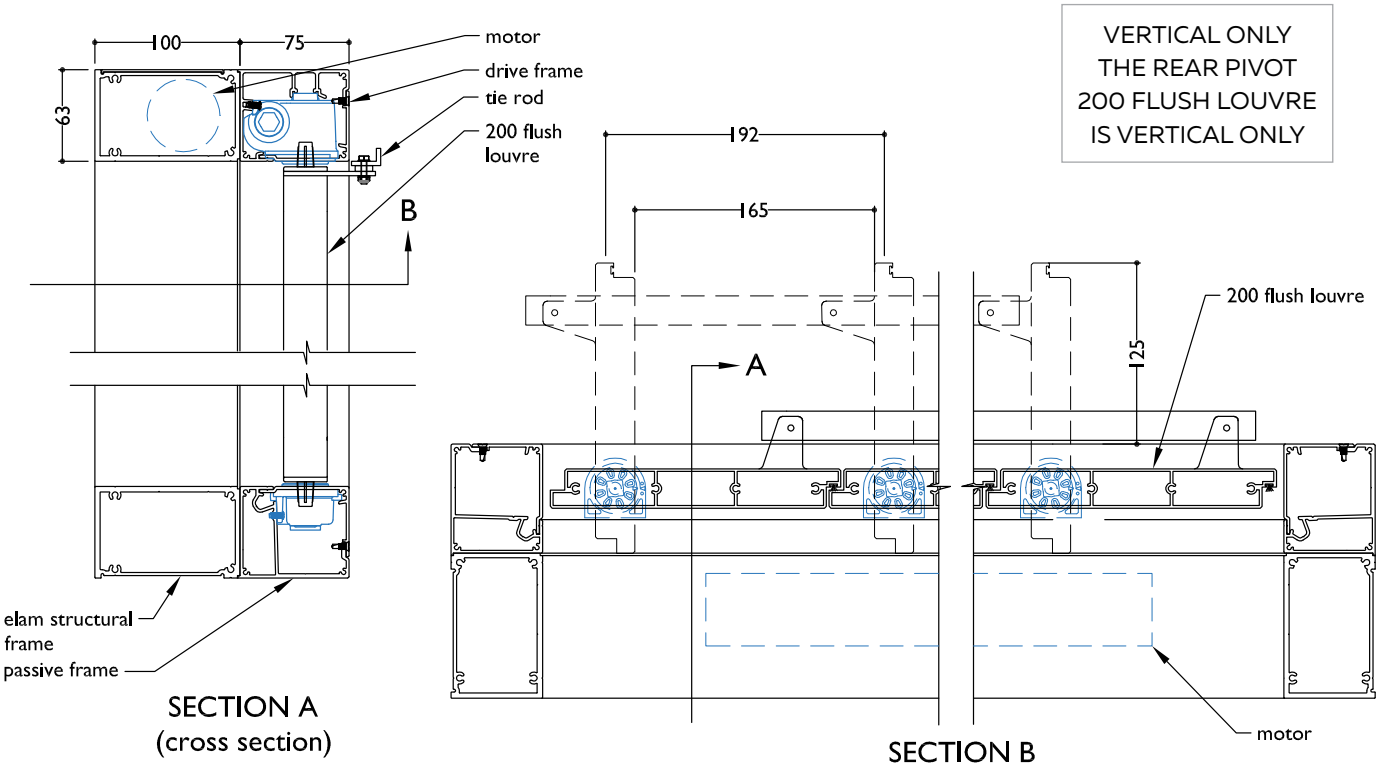


## SECTION - REAR PIVOT MANUALLY OPERABLE 200 FLUSH MAXI SPIRAL PIVOT INSERT PANEL FOUR SIDED FRAME

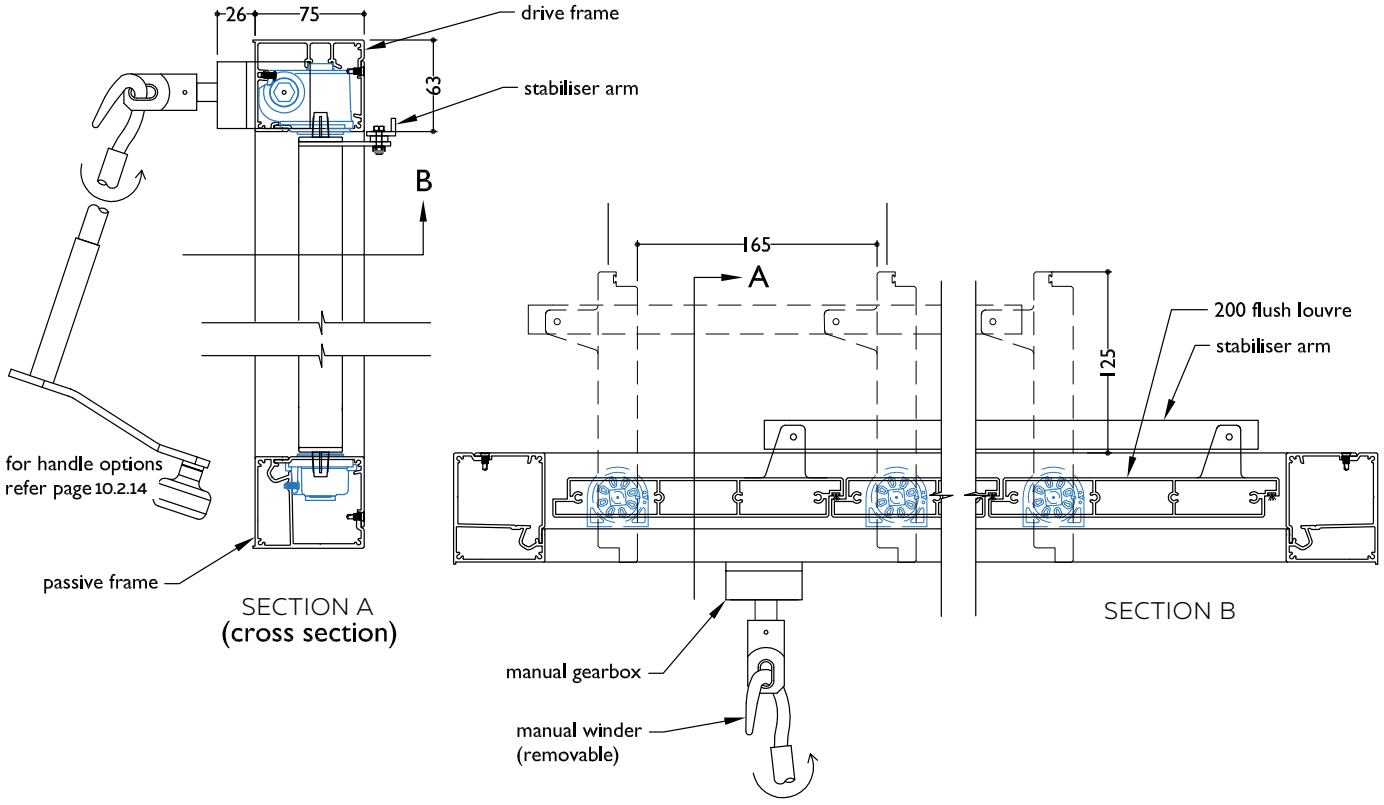



©Louvretec 2025 - All Rights Reserved. Technical specifications subject to change without notice.

# MOTORISED, HAND OPERABLE OR END FIXED BALUSTRADE

Compatible Louvres: 135mm Hi-Span, 165mm Hi-Span

## DRIVE SYSTEM: SPIRAL PIVOT

Operable or End Fixed Balustrade Systems

### NEW ZEALAND COMPLIANT OPERABLE OR FIXED BALUSTRADE SYSTEM

135MM HI-SPAN BALUSTRADE
ALUMINIUM FRAME, VERTICAL PANEL



### AUSTRALIAN COMPLIANT OPERABLE OR FIXED BALUSTRADE SYSTEM

165MM HI-SPAN BALUSTRADE
ALUMINIUM FRAME, VERTICAL PANEL





©Louvretec 2025 – All Rights Reserved. Technical specifications subject to change without notice.



OVERVIEW **SPIRAL PIVOT OPERABLE OR END FIXED 135MM HI-SPAN BALUSTRADE LOUVRES**



135MM HI-SPAN LOUVRES AS BALUSTRADE



SPIRAL PIVOT OPERABLE 135MM HI-SPAN BALUSTRADE LOUVRE CAN ALSO BE END FIXED

# 135MM HI-SPAN BALUSTRADE LOUVRES

## Operable Balustrades

The 135mm Hi-Span louvre has been designed to provide an operable Spiral pivoting louvre suitable to be used as a balustrade system in NZ.
The louvre is to be used as an infill panel only and does not include structural horizontal or vertical balustrade supports.
Structural balustrade support by others.

## Balustrade - Technical details

NZ AND AUSTRALIAN
COMPLIANCE REQUIREMENTS
This is a general guideline outlining some key requirements as at the time of printing. Please confirm all details with your local regulatory authority prior to balustrade installation.

1. A barrier is required when someone could fall vertically 1m or more.
2. Balustrade or barrier must be 1m high and of adequate strength to cope with people pressing against it.
3. Ensure nowhere on the balustrade a child can get a foot hold between 150mm & 750mm above the deck surface to climb over the balustrade or fall through.
4. In NZ the maximum opening between balustrade verticals is 100mm.
5. In Australia the maximum opening between balustrade verticals is 125mm.

# 135MM HI-SPAN BALUSTRADE LOUVRES

## Operable Balustrades

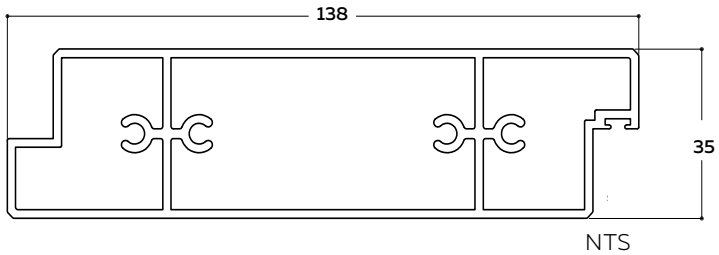


NTS

REFER TECHNICAL DETAILS PAGE 10.2.38



135MM HI-SPAN BALUSTRADE LOUVRE

©Louvretec 2025 – All Rights Reserved. Technical specifications subject to change without notice.

## SUN LOUVRES **SPIRAL PIVOT**



BLADE SPECIFICATIONS **135MM HI-SPAN BALUSTRADE LOUVRES**
(NOTE ACTUAL BLADE WIDTH 138MM)

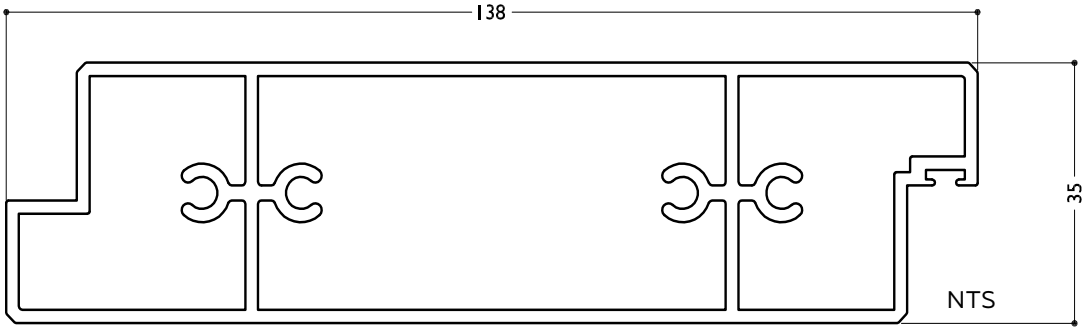


| BLADE SPECIFICATIONS | | | |
|---|---|---|---|
| Blade cover - opening system | 130 mm | Weight per linear metre - opening system | 2.16 kg/lm |
| Weight per square metre - opening system | 16.4 kg/sqm | Actual blade width | 138 mm |
| Blade centres - opening system | 130 mm | | |

### SPANS AT A GLANCE

Refer Engineering Section. Climate, terrain, shielding, location, type of structure contribute to determine spans.

| WIND ZONE | INSIDE | LOW | MEDIUM | HIGH | VERY HIGH | EXTRA HIGH |
|---|---|---|---|---|---|---|
| Factored wind speed at building | Self wt | 32 m/s<br>115 km/hr | 37m/s<br>133 km/hr | 44 m/s<br>158 km/hr | 50 m/s<br>179 km/hr | 55 m/s<br>198 km/hr |
| Adjustable & Fixed, Horizontal & Vertical | 4850 | 4400 | 4400 | 4100 | 3700 | 3500 |
| Adjustable & Fixed - Balustrade | 3000 | 3000 | 3000 | 3000 | 3000 | 3000 |

### INSTALLATION OPTIONS

### SPIRAL PIVOT SYSTEM: CALCULATE OPTIMUM FRAME OPENING SIZES

Width: Check engineering limits

Height: Calculation example showing 17 blades

| STEP 1 | |
|---|---|
| 16 blades x 130 | 2080 |
| 1 blade at 138 | 138 |
| 17 blades | =2218 |

| STEP 2 | |
|---|---|
| Blade cover | 2218 |
| + top and bottom closing angles allow for | |
| 5mm + 5mm | 10 |
| Total exact opening height = | 2228* |

*This is inside measure - not outer frame size

### TECHNICAL DETAILS BALUSTRADES NZ AND AUSTRALIAN COMPLIANCE REQUIREMENTS

This is a general guideline outlining some key requirements as at the time of printing. Please confirm all details with your local regulatory authority prior to balustrade installation.

1. A barrier is required when someone could fall vertically 1m or more.
2. Balustrade or barrier must be 1m high and of adequate strength to cope with people pressing against it.
3. Ensure nowhere on the balustrade a child can get a foot hold between 150mm & 750mm above the deck surface to climb over the balustrade or fall through.
4. In NZ the maximum opening between balustrade verticals is 100mm.
5. In Australia the maximum opening between balustrade verticals is 125mm.



©Louvretec 2025 – All Rights Reserved. Technical specifications subject to change without notice.

## NEW ZEALAND COMPLIANT OPERABLE OR FIXED BALUSTRADE SYSTEM

SECTION - MOTORISED 135MM HI-SPAN LOUVRE SPIRAL PIVOT ON ELAM STREET STRUCTURAL FRAME

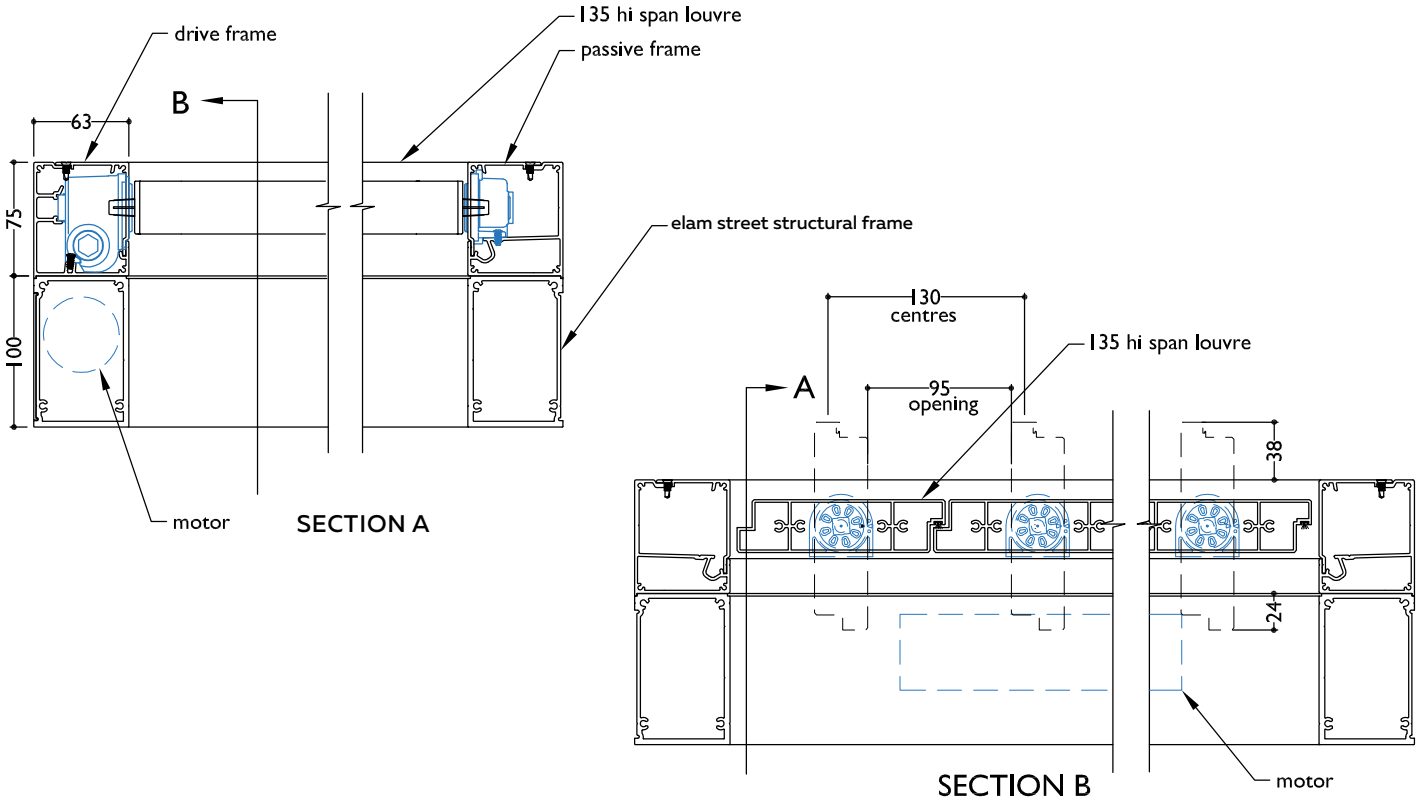


SECTION - MANUALLY OPERABLE 135 HI-SPAN LOUVRE SPIRAL PIVOT INSERT PANEL FOUR SIDED FRAME

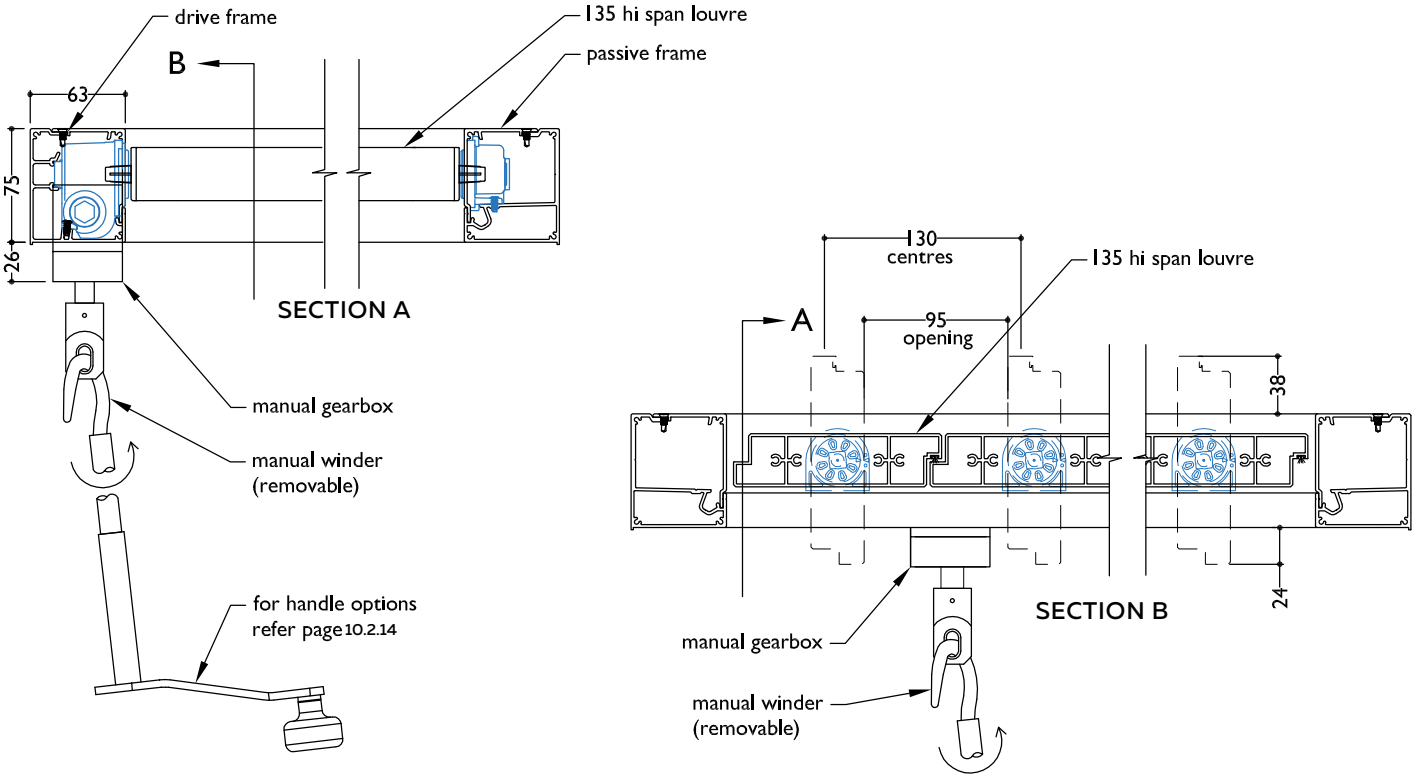



©Louvretec 2025 - All Rights Reserved. Technical specifications subject to change without notice.

135 Hi-Span is compliant with the relevant standards as an infill for residential balustrade in New Zealand.

Refer Section 13, Table 3 for maximum spans

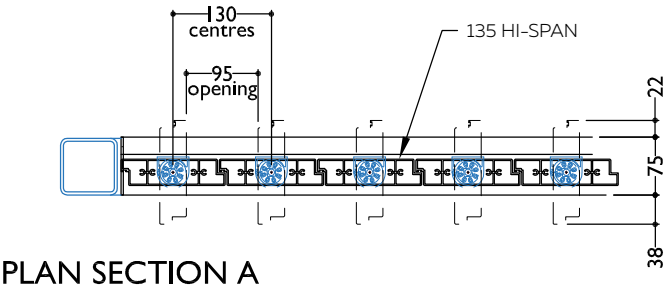


PLAN SECTION A

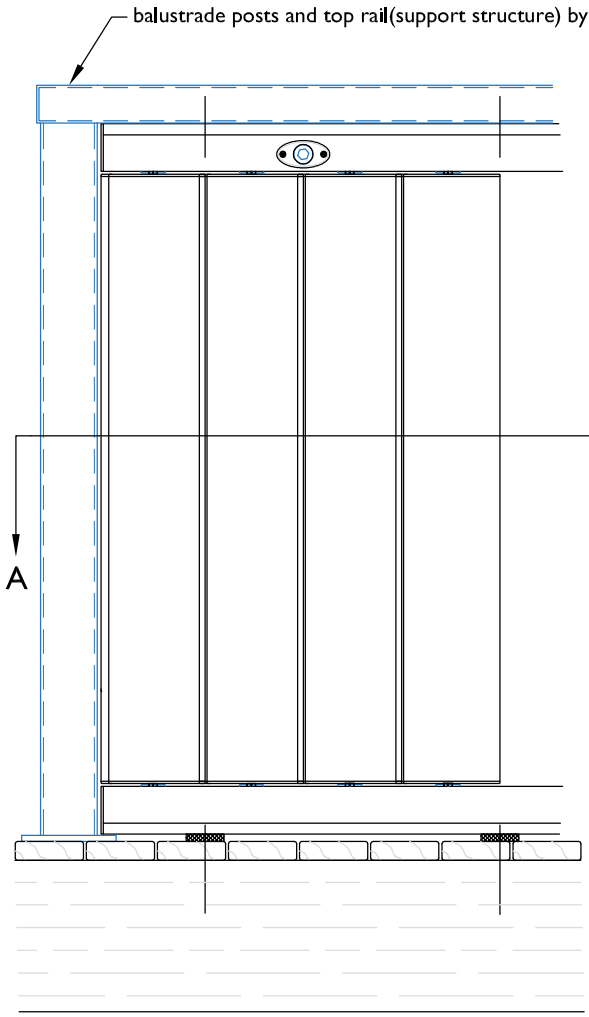


ELEVATION: 135 HI-SPAN AS STANDARD BALUSTRADE INFILL

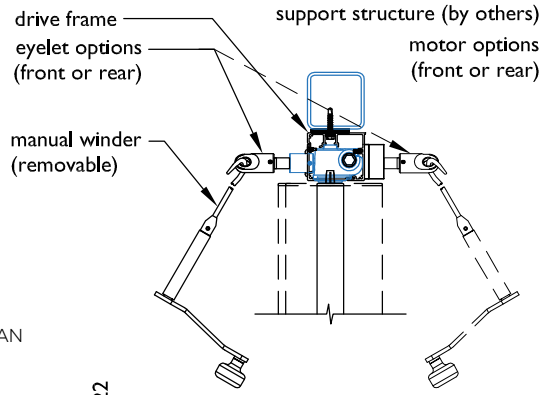


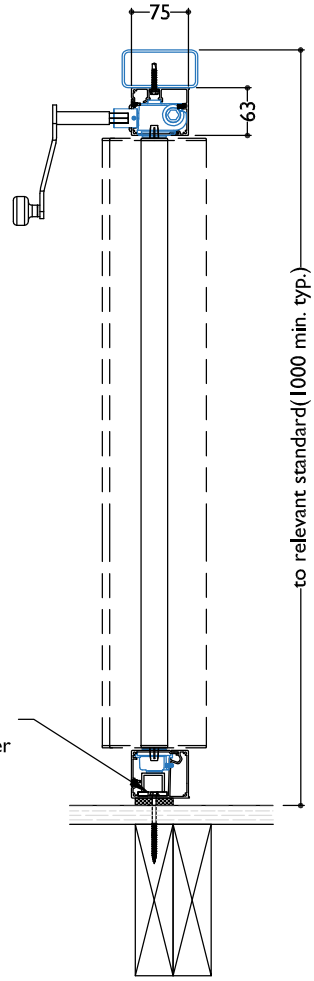


SECTION:
135 HI-SPAN
STANDARD HEIGHT

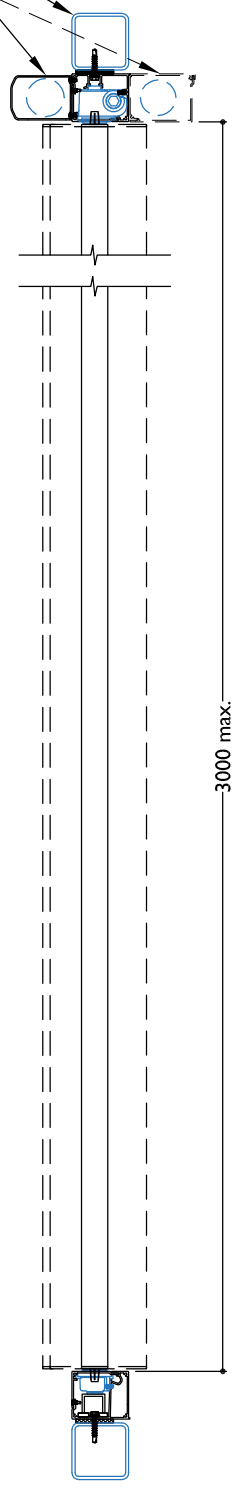


SECTION:
135 HI-SPAN
STANDARD HEIGHT





©Louvretec 2025 - All Rights Reserved. Technical specifications subject to change without notice.







165MM HI-SPAN LOUVRES AS BALUSTRADE



SPIRAL PIVOT OPERABLE 165MM HI-SPAN BALUSTRADE LOUVRE CAN ALSO BE END FIXED

# 165MM HI-SPAN BALUSTRADE LOUVRES

## Operable Balustrades

The 165mm Hi-Span louvre has been designed to provide an operable Spiral pivoting louvre suitable to be used as a balustrade system in Australia.
The louvre is to be used as an infill panel only and does not include structural horizontal or vertical balustrade supports. Structural balustrade support by others.

## Balustrade - Technical details

NZ AND AUSTRALIAN
COMPLIANCE REQUIREMENTS
This is a general guideline outlining some key requirements as at the time of printing. Please confirm all details with your local regulatory authority prior to balustrade installation.

1. A barrier is required when someone could fall vertically 1m or more.
2. Balustrade or barrier must be 1m high and of adequate strength to cope with people pressing against it.
3. Ensure nowhere on the balustrade a child can get a foot hold between 150mm & 750mm above the deck surface to climb over the balustrade or fall through.
4. In NZ the maximum opening between balustrade verticals is 100mm.
5. In Australia the maximum opening between balustrade verticals is 125mm.

# 165MM HI-SPAN BALUSTRADE LOUVRES

## Operable Balustrades

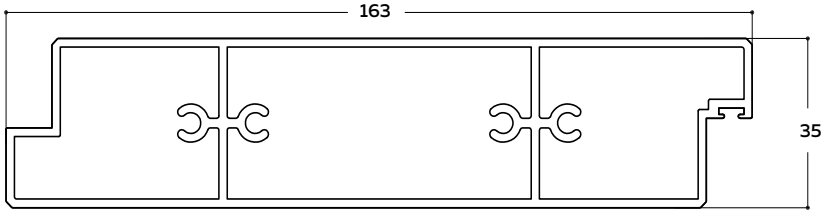


NTS



165MM HI-SPAN BALUSTRADE LOUVRE

REFER TECHNICAL DETAILS PAGE 10.2.42

©Louvretec 2025 – All Rights Reserved. Technical specifications subject to change without notice.

SUN LOUVRES **SPIRAL PIVOT**



BLADE SPECIFICATIONS **165MM HI-SPAN BALUSTRADE LOUVRES**
**(NOTE ACTUAL BLADE WIDTH 163MM)**

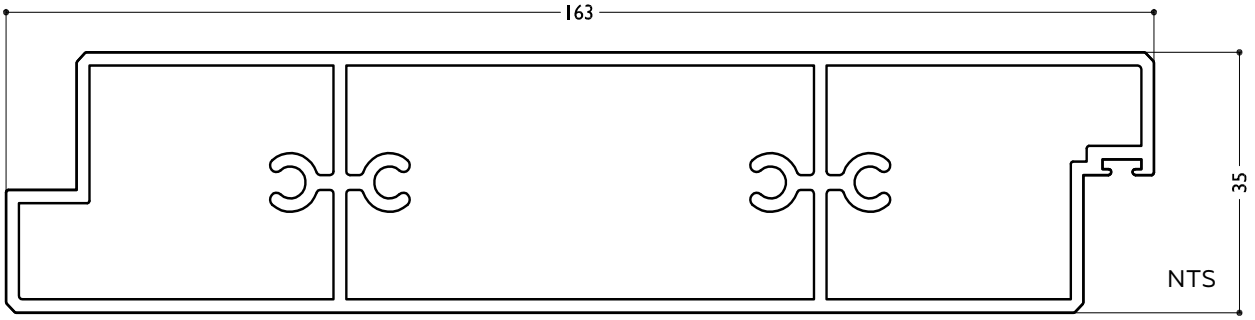


| BLADE SPECIFICATIONS | | | |
|---|---|---|---|
| Blade cover - opening system | 155 mm | Weight per linear metre - opening system | 2.556 kg/lm |
| Weight per square metre - opening system | 16.4 kg/sqm | Actual blade width | 163 mm |
| Blade centres - opening system | 155 mm | | |

## SPANS AT A GLANCE

Refer Engineering Section. Climate, terrain, shielding, location, type of structure contribute to determine spans.

| WIND ZONE | INSIDE | LOW | MEDIUM | HIGH | VERY HIGH | EXTRA HIGH |
|---|---|---|---|---|---|---|
| Factored wind speed at building | Self wt | 32 m/s<br>115 km/hr | 37m/s<br>133 km/hr | 44 m/s<br>158 km/hr | 50 m/s<br>179 km/hr | 55 m/s<br>198 km/hr |
| Adjustable & Fixed, Horizontal & Vertical | 4950 | 4500 | 4500 | 4200 | 3800 | 3500 |
| Adjustable & Fixed - Balustrade | 3300 | 3300 | 3300 | 3300 | 3300 | 3300 |

## INSTALLATION OPTIONS

### SPIRAL PIVOT SYSTEM: CALCULATE OPTIMUM FRAME OPENING SIZES

Width: Check engineering limits

Height: Calculation example showing 17 blades

STEP 1

| | |
|---|---|
| 16 blades x 150 | 2480 |
| 1 blade at 163 | 163 |
| 17 blades | =2643 |

STEP 2

| | |
|---|---|
| Blade cover | 2643 |
| + top and bottom closing angles allow for | |
| 5mm + 5mm | 10 |
| Total exact opening height | = 2655* |

*This is inside measure - not outer frame size

### TECHNICAL DETAILS BALUSTRADES NZ AND AUSTRALIAN COMPLIANCE REQUIREMENTS

This is a general guideline outlining some key requirements as at the time of printing. Please confirm all details with your local regulatory authority prior to balustrade installation.

1. A barrier is required when someone could fall vertically 1m or more.
2. Balustrade or barrier must be 1m high and of adequate strength to cope with people pressing against it.
3. Ensure nowhere on the balustrade a child can get a foot hold between 150mm & 750mm above the deck surface to climb over the balustrade or fall through.
4. In NZ the maximum opening between balustrade verticals is 100mm.
5. In Australia the maximum opening between balustrade verticals is 125mm.



©Louvretec 2025 – All Rights Reserved. Technical specifications subject to change without notice.

## AUSTRALIAN COMPLIANT OPERABLE OR FIXED BALUSTRADE SYSTEM

SECTION - MOTORISED 165MM HI-SPAN LOUVRE SPIRAL PIVOT ON ELAM STREET STRUCTURAL FRAME

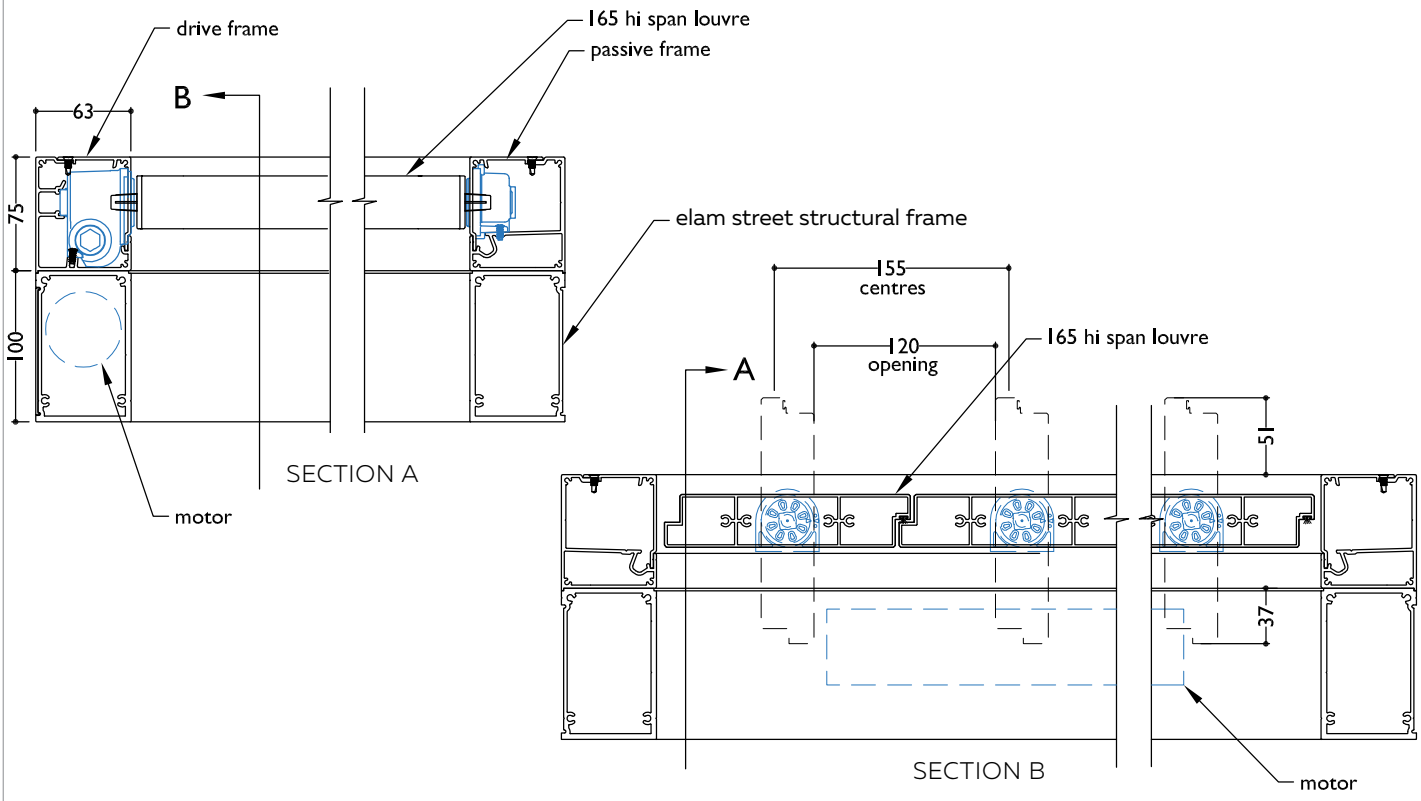


SECTION - MANUALLY OPERABLE 165 HI-SPAN LOUVRE SPIRAL PIVOT INSERT PANEL FOUR SIDED FRAME

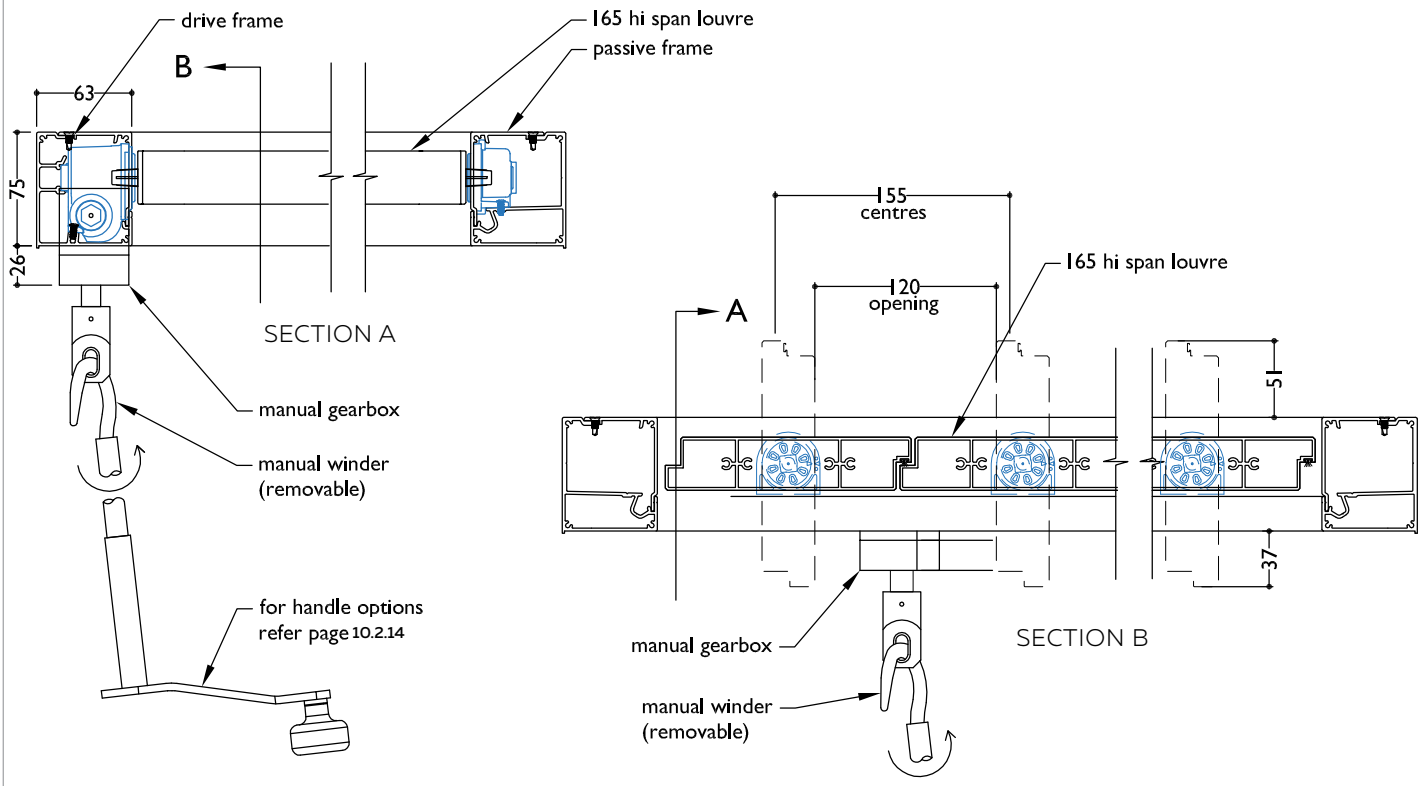



©Louvretec 2025 – All Rights Reserved. Technical specifications subject to change without notice.

165 Hi-Span is compliant with the relevant standards as an infill for residential balustrade in Australia.

Refer Section 13, Table 3 for maximum spans

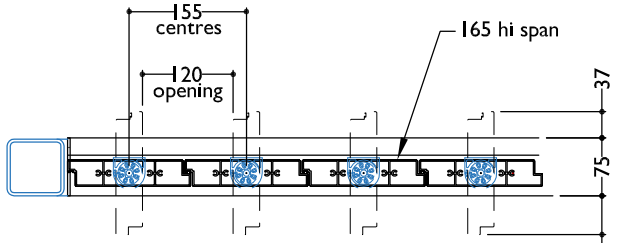


PLAN SECTION A

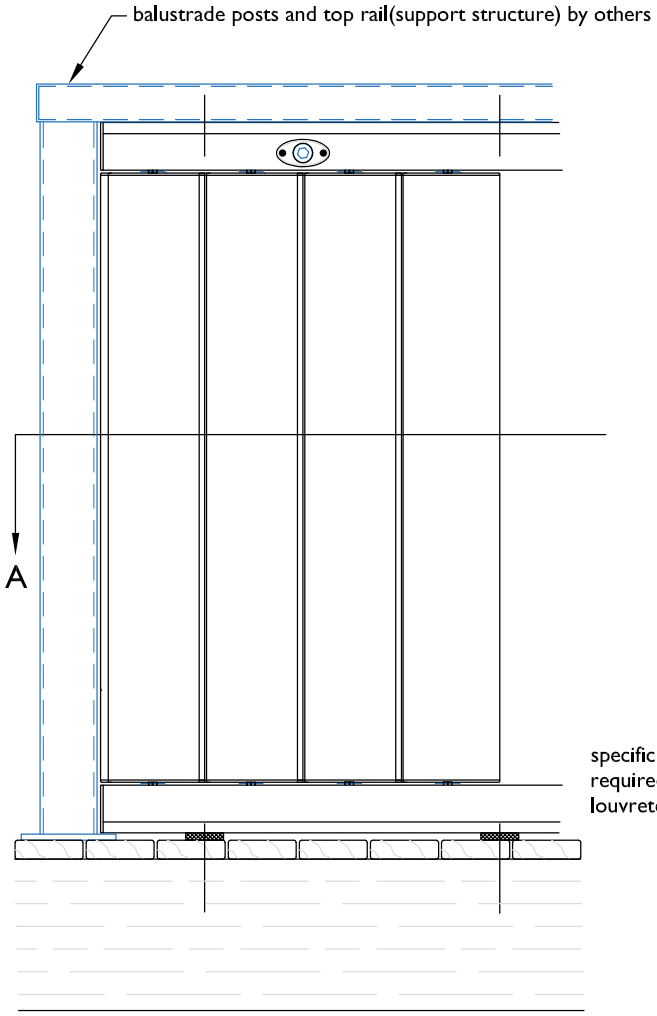


ELEVATION: 165 HI-SPAN AS STANDARD BALUSTRADE INFILL

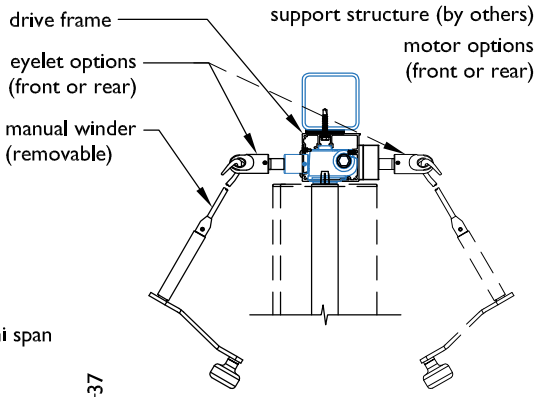


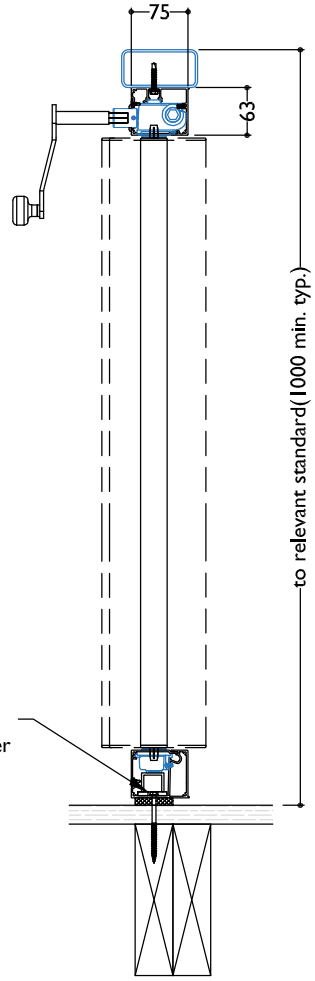


SECTION:
165 HI-SPAN
STANDARD HEIGHT

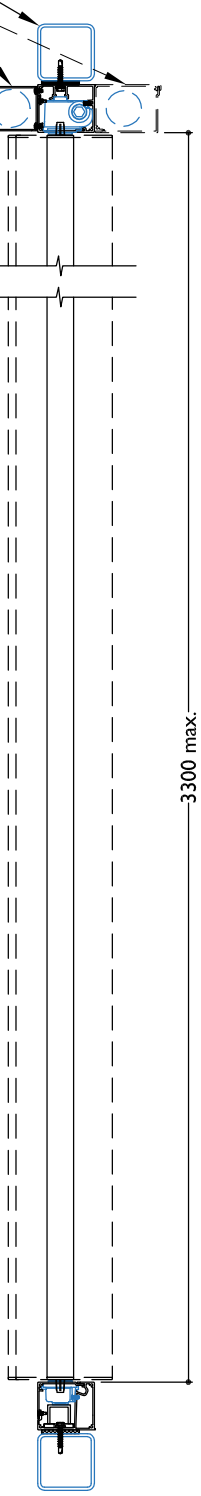


SECTION:
165 HI-SPAN
STANDARD HEIGHT



FILE: SUN LOUVRES Spiral Pivot 10.2.44 DATE MODIFIED: 01/10/2024 SCALE:

www.louvretec.co.nz www.louvretec.com.au
©Louvretec 2025 - All Rights Reserved. Technical specifications subject to change without notice.

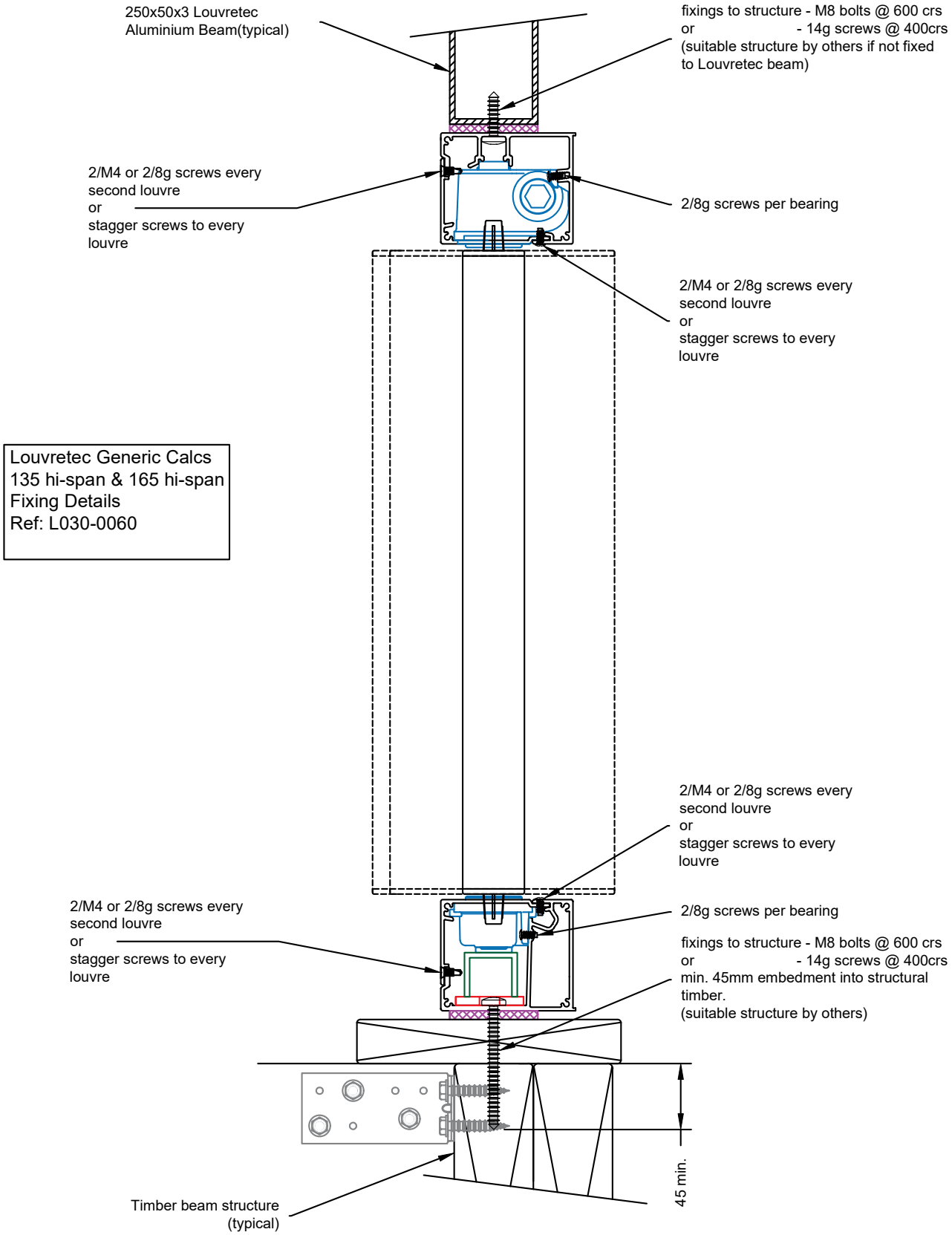



©Louvretec 2025 – All Rights Reserved. Technical specifications subject to change without notice.

sun louvres
By Louvretec

## 300 MAXI DRIVE SUN LOUVRES


| | |
|---|---|
| Gallery and Overview | 10.3.02 - 10.3.03 |
| 300mm Maxi Louvre | 10.3.04 - 10.3.07 |


©Louvretec 2025 – All Rights Reserved. Technical specifications subject to change without notice.

# SUN LOUVRES **300 MAXI DRIVE GALLERY**



1.


3.


4.


2.


5.

1. 300MM MAXI LOUVRE VERTICAL PANEL 2. 300MM MAXI LOUVRE BLADES MOTORISED CLOSED 3. 300MM MAXI LOUVRES MOTORISED OPEN
4. 300MM MAXI LOUVRES MOTORISED CLOSED 5. 300 MAXI LOUVRE MOTORISED


©Louvretec 2025 – All Rights Reserved. Technical specifications subject to change without notice.





300MM MAXI DRIVE LOUVRE BLADE, FIXED. TIMBER LOOK POWDERCOAT



VERTICAL SUN LOUVRES FITTED INTO A FRAME

# 300MM MAXI LOUVRE

## Elliptical shape

The 300mm Maxi Louvre is available in a motorised option using Louvretec's Maxi-Drive Pivot System.

This pivot system hides both the motor and pivot mechanism within a structural aluminium support frame.

Powered by Somfy, Maxi-Drive incorporates both a reduction gearbox and supporting drive arm, providing strength needed for pivoting large blade louvres. Ideal for both residential and commercial applications.

The 300mm Maxi Louvre is also available End Fixed or Bracket fixed, horizontal or vertical.

Please note, our RL300 and RL450 Louvres are also compatible with the Maxi Drive system. Please contact your local Louvretec Dealer for more information. We are focused on meeting your needs with tailored solutions.



MOTORISED LOUVRE BLADES

# 300MM MAXI LOUVRE

## Elliptical shape

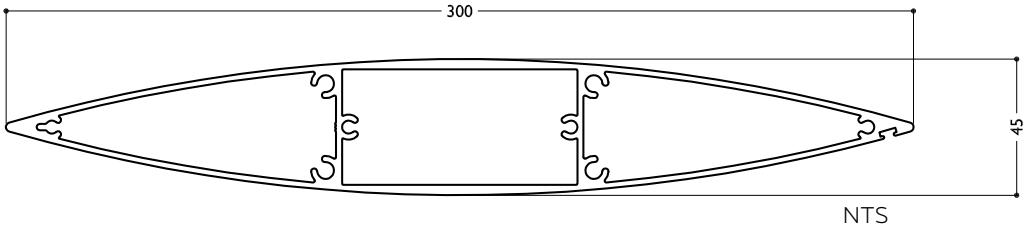


NTS



300MM MAXI LOUVRE

REFER TECHNICAL DETAILS PAGE 10.3.04

©Louvretec 2025 – All Rights Reserved. Technical specifications subject to change without notice.



## BLADE SPECIFICATIONS 300 MAXI LOUVRE

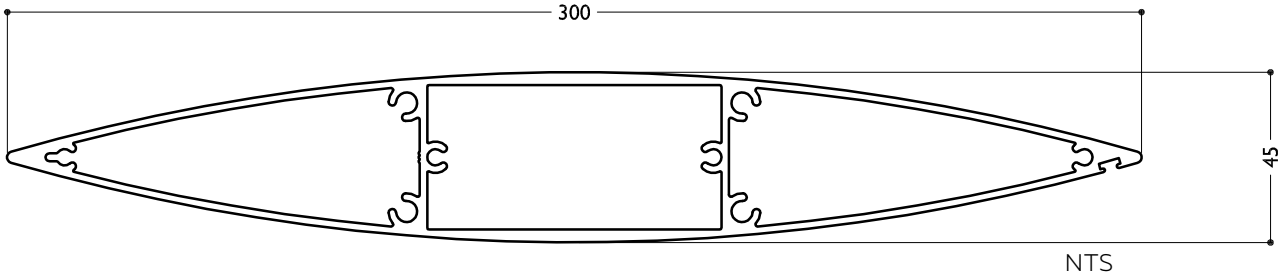


| BLADE SPECIFICATIONS | | | |
|---|---|---|---|
| Blade cover - opening system | 288 mm | Weight per linear metre - opening system | 5.66 kg/lm |
| Weight per square metre - opening system | 19.64 kg/sqm | Actual blade width | 300 mm |
| Blade centres - opening system | 288 mm | | |

### SPANS AT A GLANCE

Refer Engineering Section. Climate, terrain, shielding, location, type of structure contribute to determine spans.

| WIND ZONE | INSIDE | LOW | MEDIUM | HIGH | VERY HIGH | EXTRA HIGH |
|---|---|---|---|---|---|---|
| Factored wind speed at building | Self wt | 32 m/s<br>115 km/hr | 37m/s<br>133 km/hr | 44 m/s<br>158 km/hr | 50 m/s<br>179 km/hr | 55 m/s<br>198 km/hr |
| Adjustable & Fixed, Horizontal & Vertical | 4800 | 4800 | 4800 | 4200 | 3700 | 3350 |

### INSTALLATION OPTIONS

### MAXI DRIVE SYSTEM: CALCULATE OPTIMUM FRAME OPENING SIZES

Width: Check engineering limits

Height: Calculation example showing 17 blades

| | |
|---|---|
| STEP 1 | |
| 16 blades x 288 | 4608 |
| 1 blade at 300 | 300 |
| 17 blades | =4908 |
| STEP 2 | |
| Blade cover | 4908 |
| + top and bottom closing angles allow for | |
| 5mm + 5mm | 10 |
| Total exact opening height | =4918* |

*This is inside measure - not outer frame size



MOTORISED 300 MAXI LOUVRE



HAND OPERABLE 300 MAXI LOUVRE



©Louvretec 2025 – All Rights Reserved. Technical specifications subject to change without notice.





## TYPICAL DETAIL 300MM MAXI DRIVE - VERTICAL MOTORISED PANEL

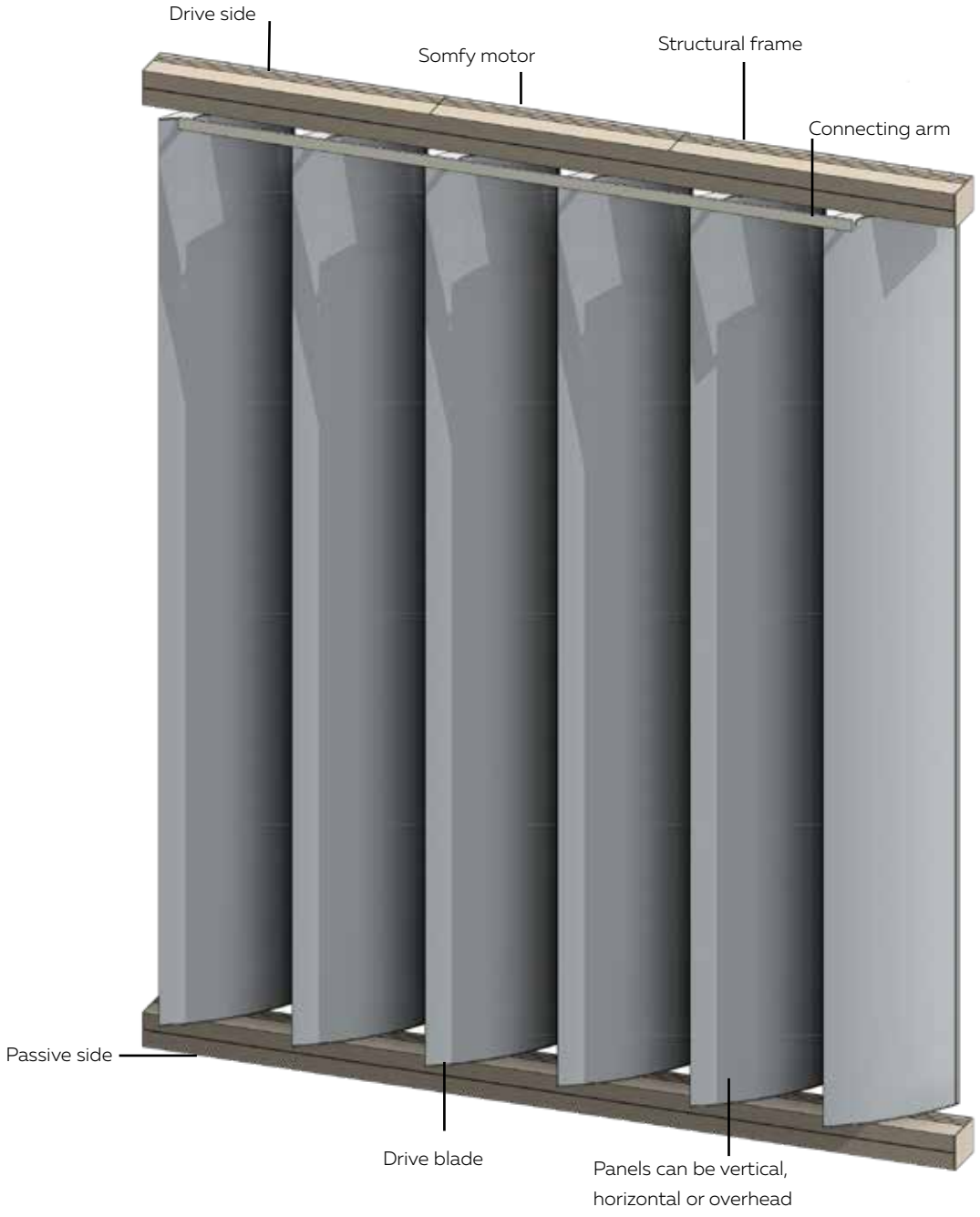


©Louvretec 2025 – All Rights Reserved. Technical specifications subject to change without notice.

**TYPICAL DETAIL: MAXI DRIVE LOUVRES**
**300MM MAXI DRIVE - MOTORISED**

SECTION - LOUVRES CLOSED

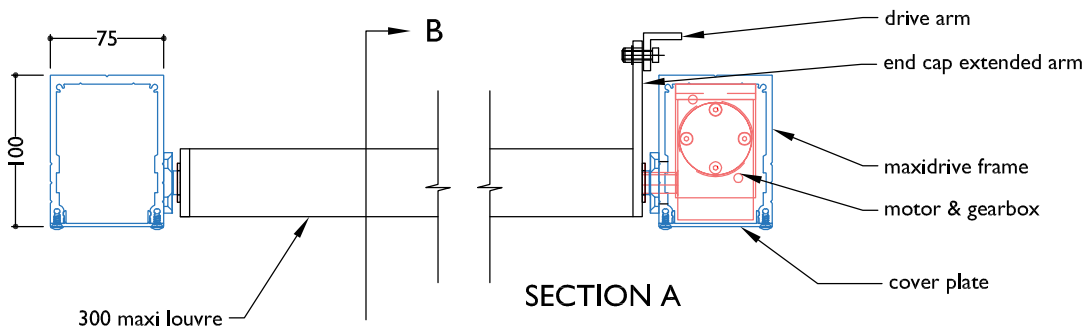


SECTION A

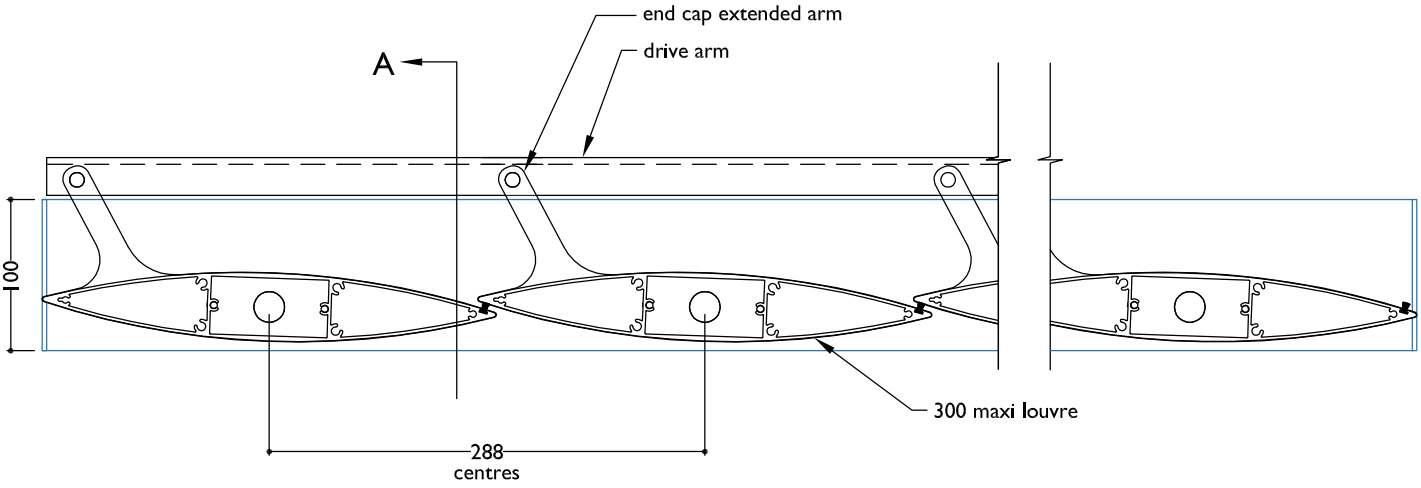


SECTION B - LOUVRES CLOSED

SECTION - LOUVRES OPEN

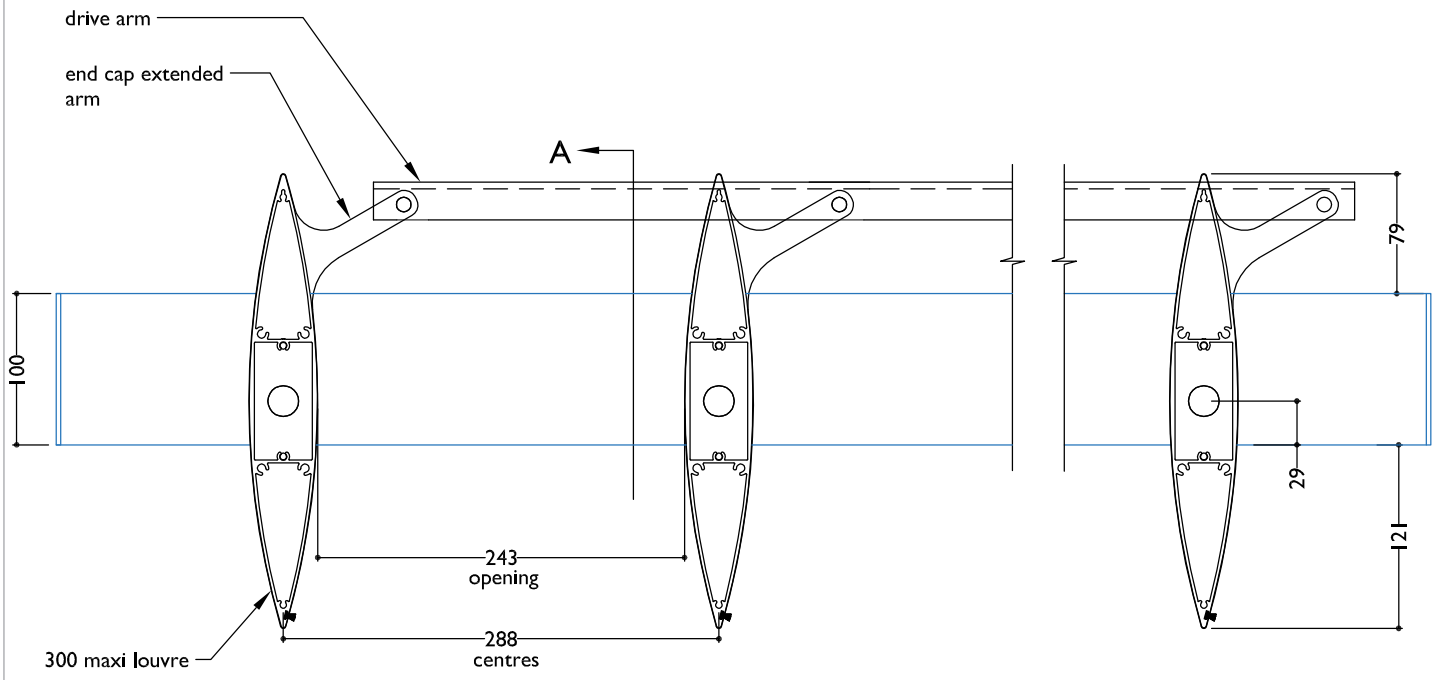


SECTION B - LOUVRES OPEN



FILE: SUN LOUVRES Maxi Drive 10.3.06 DATE MODIFIED: 01/06/2024 SCALE:

www.louvretec.co.nz www.louvretec.com.au

©Louvretec 2025 - All Rights Reserved. Technical specifications subject to change without notice.

SECTION - LOUVRES CLOSED

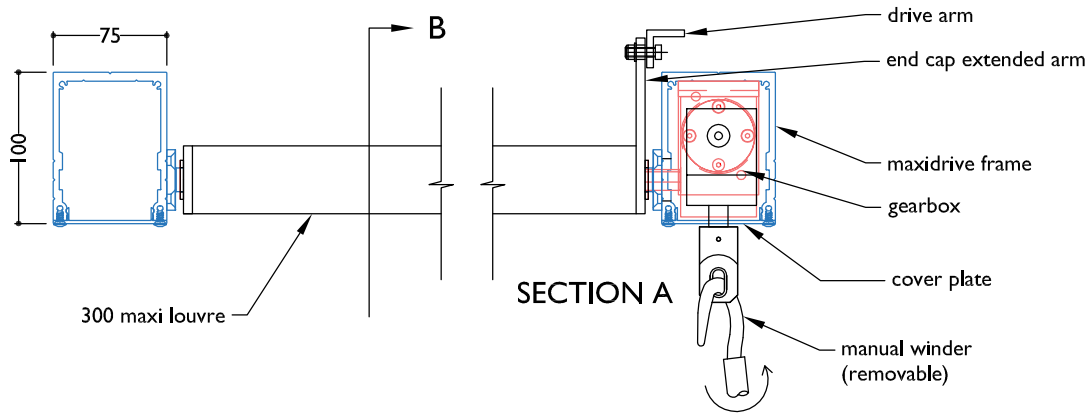


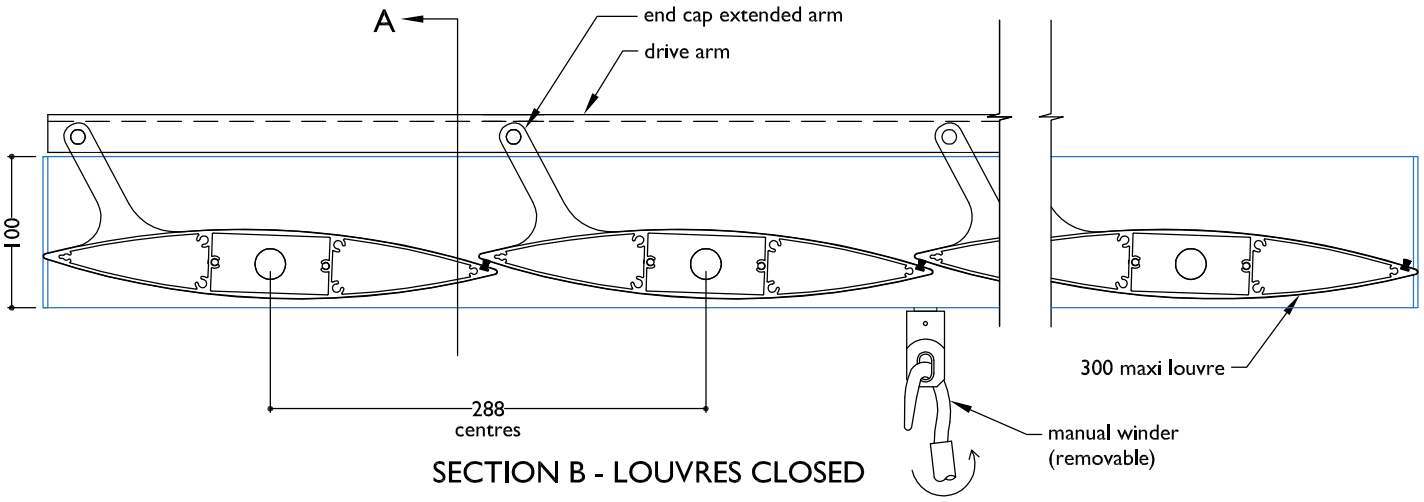


SECTION B - LOUVRES CLOSED

SECTION - LOUVRES OPEN

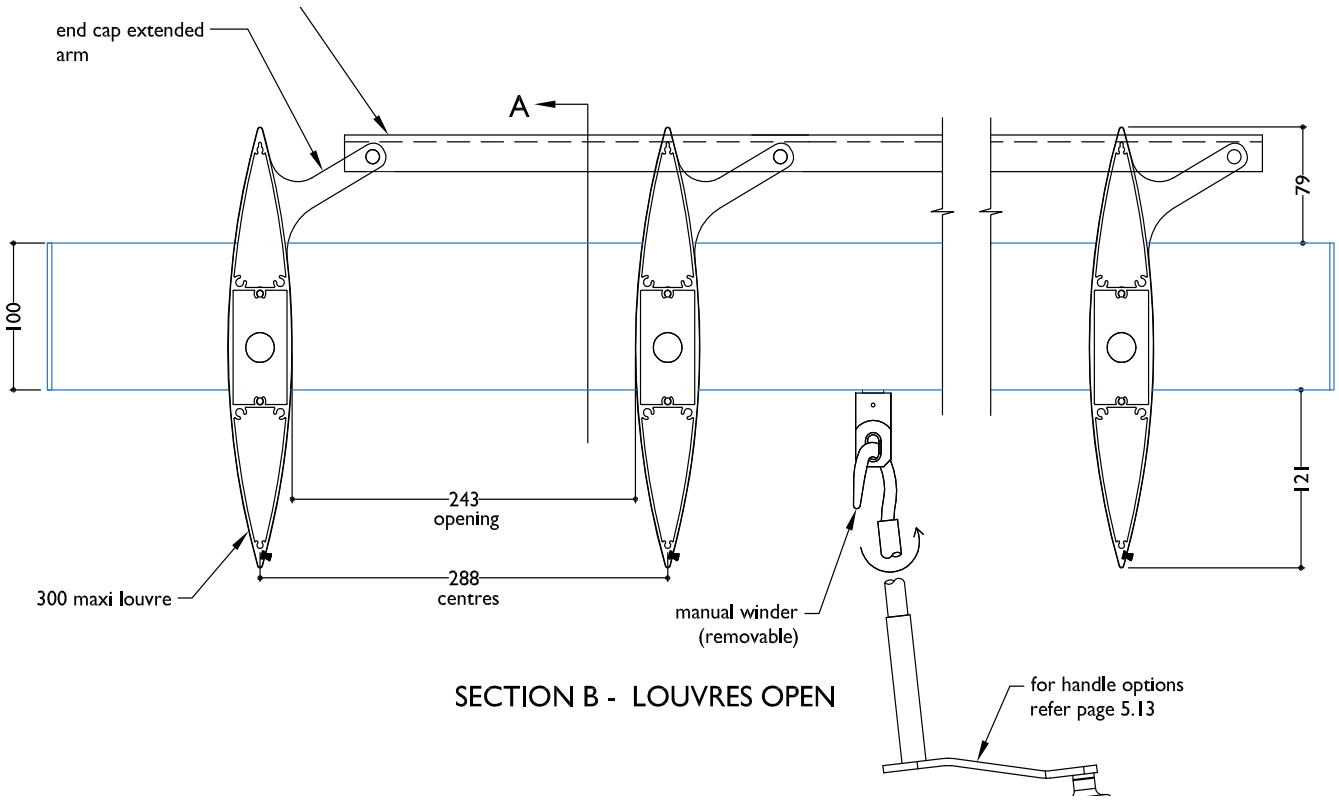


SECTION B - LOUVRES OPEN


©Louvretec 2025 - All Rights Reserved. Technical specifications subject to change without notice.

sun louvres
By Louvretec

## END FIXED SUN LOUVRES


| | |
|---|---|
| Gallery and Overview | 10.4.02 - 10.4.03 |
| End Fixed Vertical Louvre Infills | 10.4.04 |
| End Fixed Overhead Panels | 10.4.05 |
| Louvre Range overview | 10.4.06 - 10.4.07 |
| Group 1 Louvres: 90mm Midi & 95mm Bella Vistas | 10.4.08 - 10.4.11 |
| Group 2 Louvres: 135mm & 165mm Hi-Spans | 10.4.12 - 10.4.15 |
| Group 3 Louvres: 120mm, 180mm Airfoils & 150mm Midi, 200mm Maxi | 10.4.16 - 10.4.23 |
| Group 4 Louvres: 150mm Helena Bay & 125 & 180 Weatherboards | 10.4.24 - 10.4.30 |
| Group 5 Louvres: 300mm, 600mm Maxis | 10.4.31 - 10.4.36 |
| Group 6 Louvres: RL300, RL450, RL600 Square & Mitred Louvres | 10.4.38 - 10.4.46 |
| End Fixed Chimney Surrounds | 10.4.47 - 10.4.48 |


©Louvretec 2025 – All Rights Reserved. Technical specifications subject to change without notice.

# SUN LOUVRES END FIXED **GALLERY**


1.


2.


3.


4.


5.

1. END FIXED 200MM MAXI LOUVRE VERTICAL PANEL 2. END FIXED 90MM MIDI LOUVRES AS EYEBROW 3. END FIXED 180MM AIRFOIL LOUVE PANEL
4. END FIXED 120MM AIRFOIL PANEL
5. END FIXED 300MM MAXI LOUVRES



©Louvretec 2025 – All Rights Reserved. Technical specifications subject to change without notice.

# END FIXED SUN LOUVRES

## Fix blades Vertically or Horizontally

All Louvretec sun louvres can be End Fixed and all have internal screw fixing ports which allow the blades to be end fixed, set at any pitch and any centre.

As a rule of thumb blade centres are generally fixed at between 75% - 100% of the blade width.



VERTICAL PANEL END FIXED - HORIZONTAL LOUVRES

## VERTICAL PANELS END FIXED

- All Louvretec sun louvres have internal screw fixing ports. This enables the blades to be;
  - set at any angle or pitch (blade pitch)
  - set at any centre (blade centre)
- As a rule of thumb, blade centres are fixed at;
  - between 75% - 100% of their width.
    eg: 180mm Airfoil would have a centre between 135mm - 180mm.
- Blade pitch is an equally important consideration in determining the degree of light, shade, privacy and shelter.



OVERHEAD PANEL END FIXED - HORIZONTAL LOUVRES

## OVERHEAD PANELS END FIXED

- Horizontal or Overhead louvres may fit within an existing opening or as illustrated may require a separate structural sub-frame.
- Sub-frames are typically aluminium or steel and usually require specific engineering details.
- Louvretec specialises in the supply and installation of aluminium structural sub-frames.
- Please contact Louvretec for further details.

©Louvretec 2025 - All Rights Reserved. Technical specifications subject to change without notice.

# VERTICAL PANELS END FIXED INFILLS

## How the system works

- Blades can be set to any pitch or centre
- Three typical options are shown:
  - Blade Pitch Up
  - Central
  - Blade Pitch Down
- All Louvretec sun louvres have internal screw fixing ports. This enables the blades to be;
  - set at any angle or pitch (blade pitch)
  - set at any centre (blade centre)
- As a rule of thumb,
  blade centres are fixed at between 75% to 100% of their width.
  eg: 180mm Airfoil would have a centre between 135mm to 180mm.
- Blade pitch is an equally important consideration in determining the degree of light, shade, privacy and shelter.

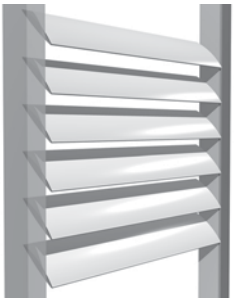

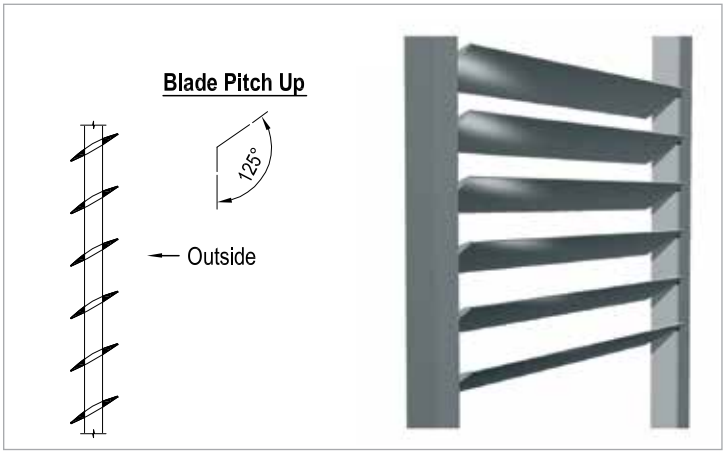


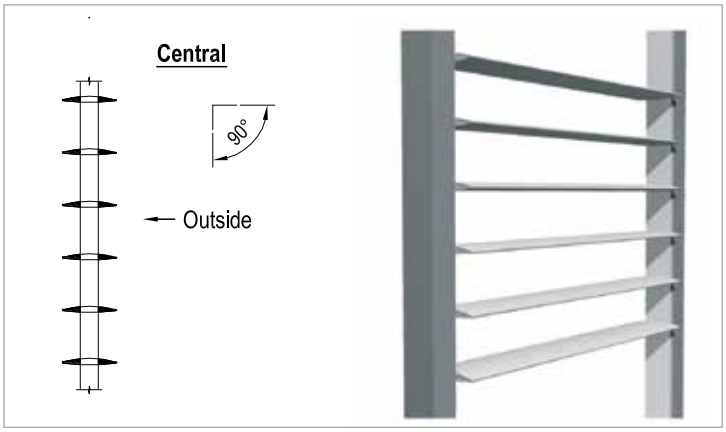


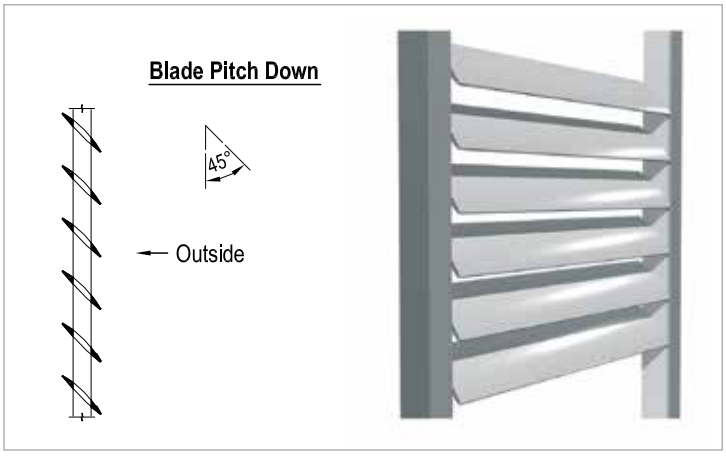


### LOUVRE BLADES IN RELATION TO FRAME

- 1. Louvres fit outside of frame, End Caps required



2. Louvres fit within frame, End Caps required

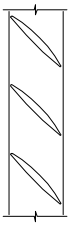



©Louvretec 2025 – All Rights Reserved. Technical specifications subject to change without notice.

# OVERHEAD PANELS END FIXED INFILLS

## How the system works

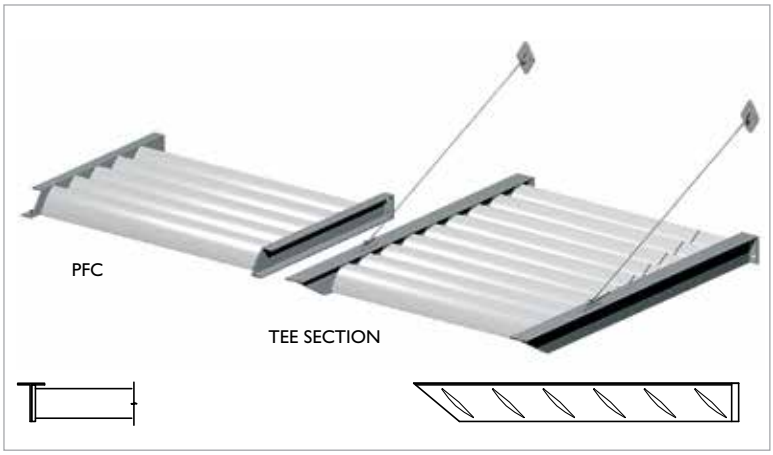


- Horizontal or Overhead louvres may fit within an existing opening or as illustrated may require a separate structural sub-frame.
- Sub-frames are typically aluminium or steel and usually require specific engineering details.
- Engineering is usually also required for the fixing details to the building.

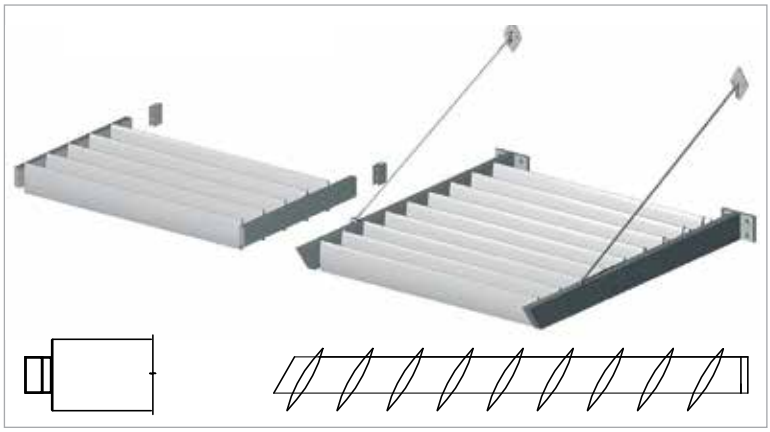

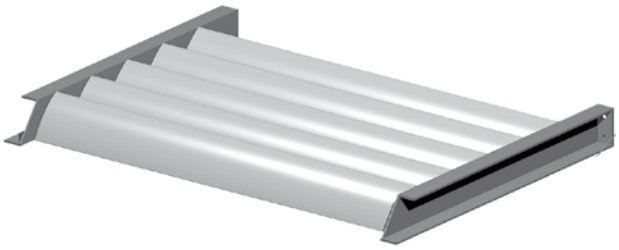

- Louvretec specialises in the supply and installation of aluminium structural sub-frames.

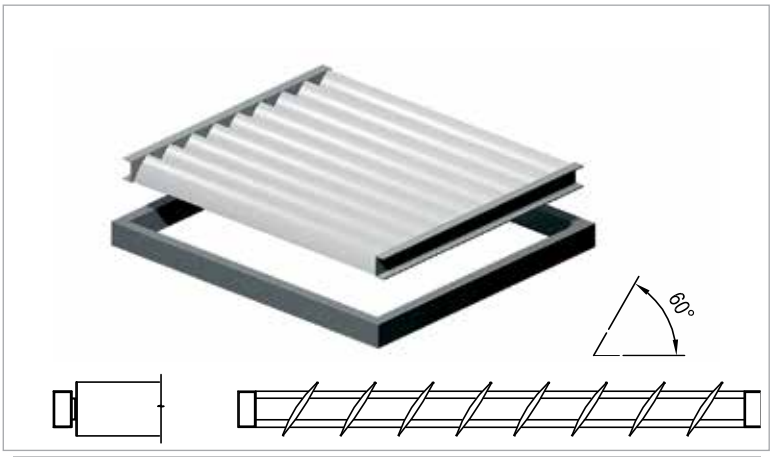


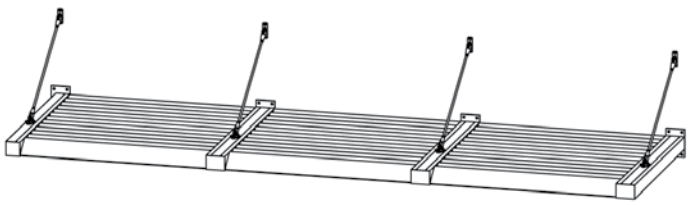

- All louvre panels shown can be joined to create one continuous panel.

©Louvretec 2025 – All Rights Reserved. Technical specifications subject to change without notice.

APPLICATION OVERVIEW **GROUPED END FIXED LOUVRES AT GLANCE**

MINIMUM - MAXIMUM BLADE SPANS AT A GLANCE AS DETERMINED BY WIND SPEED. REFER TO SECTION 13 ENGINEERING REPORTS FOR FULL DETAILS ON BLADE SPANS.

EXTRA HIGH WIND SPEED 198KM/H 55M/S EX HIGH

LOW WIND SPEED 115KM/H 32M/S LOW

# THE LOUVRETEC RANGE OF END FIXED SUN LOUVRES

## 6 Groups of Sun Louvres. All Louvretec Sun Louvres can be End Fixed

IF A LOUVRE YOU WISH TO SPECIFY IS NOT SHOWN IN THIS SECTION PLEASE CONTACT YOUR DEALER. WE'RE FOCUSED TO MEETING YOUR NEEDS WITH TAILORED SOLUTIONS.

| GROUP | LOUVRE | MAXIMUM SPANS |
|---|---|---|
| END FIXED GROUP 1 |  90 MIDI LOUVRE | 1400MM EX HIGH<br>2000MM LOW |
| |  95 BELLA VISTA | 1450MM EX HIGH<br>2100MM LOW |
| |  95 BELLA VISTA HEAVY | 1900MM EX HIGH<br>2800MM LOW |
| END FIXED GROUP 2 |  135 HI SPAN LOUVRE | 3500MM EX HIGH<br>4400MM LOW |
| |  165 HI SPAN LOUVRE | 3500MM EX HIGH<br>4500MM LOW |
| |  135 HI SPAN BALUSTRADE LOUVRE | 3000MM EX HIGH<br>3000MM LOW |
| |  165 HI SPAN BALUSTRADE LOUVRE | 3300MM EX HIGH<br>3300MM LOW |
| END FIXED GROUP 3 |  120 AIRFOIL LOUVRE | 1600MM EX HIGH<br>2300MM LOW |
| |  150 MIDI LOUVRE | 1900MM EX HIGH<br>2750MM LOW |
| |  180 AIRFOIL LOUVRE | 2050MM EX HIGH<br>2950MM LOW |
| |  200 MAXI LOUVRE | 2350MM EX HIGH<br>3700MM LOW |



©Louvretec 2025 – All Rights Reserved. Technical specifications subject to change without notice.

## APPLICATION OVERVIEW **GROUPED END FIXED LOUVRES AT A GLANCE**

MINIMUM - MAXIMUM BLADE SPANS AT A GLANCE AS DETERMINED BY WIND SPEED. REFER TO SECTION 13 ENGINEERING REPORTS FOR FULL DETAILS ON BLADE SPANS.

EXTRA HIGH WIND SPEED 198KM/H 55M/S




LOW WIND SPEED 115KM/H 32M/S




# THE LOUVRETEC RANGE OF END FIXED SUN LOUVRES

6 Groups of Sun Louvres. All Louvretec Sun Louvres can be End Fixed

IF A LOUVRE YOU WISH TO SPECIFY IS NOT SHOWN IN THIS SECTION PLEASE CONTACT YOUR DEALER. WE'RE FOCUSED TO MEETING YOUR NEEDS WITH TAILORED SOLUTIONS.

| GROUP | LOUVRE | MAXIMUM SPANS |
|---|---|---|
| END FIXED GROUP 4 |  150MM HELENA BAY | 2050MM (EX HIGH) / 3050MM (LOW) |
| |  125MM WEATHERBOARD PANEL | 1750MM (EX HIGH) / 4400MM (LOW) |
| |  180MM WEATHERBOARD PANEL | 2100MM (EX HIGH) / 3050MM (LOW) |
| END FIXED GROUP 5 |  300 MAXI LOUVRE | 3350MM (EX HIGH) / 4800MM (LOW) |
| |  600 MAXI LOUVRE | 3700MM (EX HIGH) / 5800MM (LOW) |
| END FIXED GROUP 6 |  RL300 MITRE LOUVRE | 4050MM (EX HIGH) / 5800MM (LOW) |
| |  RL450 MITIRE LOUVRE | 4050MM (EX HIGH) / 5800MM (LOW) |
| |  RL600 MITRE LOUVRE | 4050MM (EX HIGH) / 5800MM (LOW) |
| |  RL300 SQUARE LOUVRE | 4050MM (EX HIGH) / 5800MM (LOW) |
| |  RL450 SQUARE LOUVRE | 4050MM (EX HIGH) / 5800MM (LOW) |
| |  RL600 SQUARE LOUVRE | 4050MM (EX HIGH) / 5800MM (LOW) |

©Louvretec 2025 - All Rights Reserved. Technical specifications subject to change without notice.

# GROUP 1 LOUVRES

Small to Medium size louvres: 90mm Midi, 95 Bella Vista, 95 Bella Vista Heavy

## 90MM MIDI LOUVRE

Small to medium size

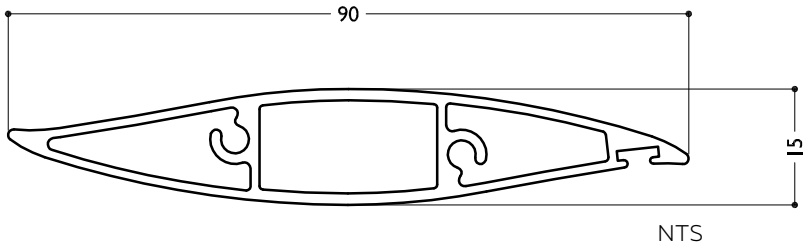


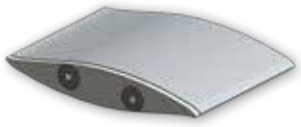

90MM MIDI LOUVRE

REFER TECHNICAL DETAILS PAGES 10.1.06

## 95MM BELLA VISTA

A rectangular option for infills

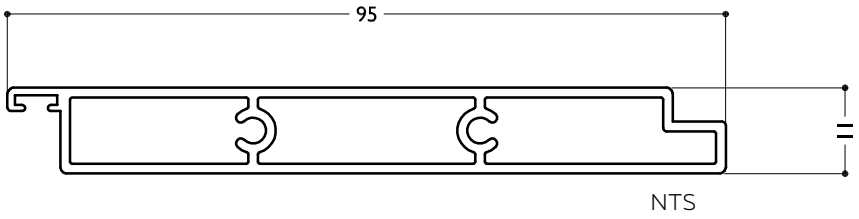




95MM BELLA VISTA

REFER TECHNICAL DETAILS PAGES 10.1.10

## 95MM BELLA VISTA HEAVY

Ideal for exposed locations

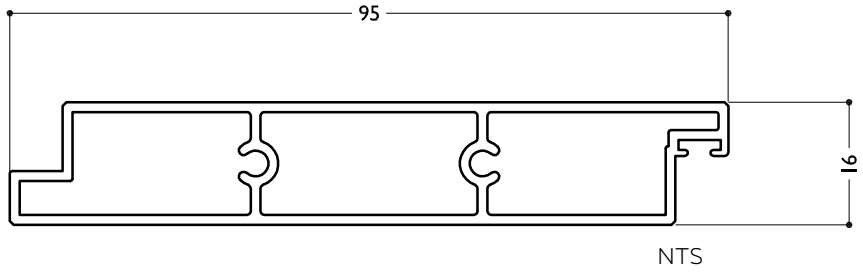




95MM BELLA VISTA HEAVY

REFER TECHNICAL DETAILS PAGES 10.1.11



©Louvretec 2025 – All Rights Reserved. Technical specifications subject to change without notice.

# TYPICAL DETAIL: END FIXED OVERHEAD & END FIXED VERTICAL PANELS 90MM MIDI LOUVRE

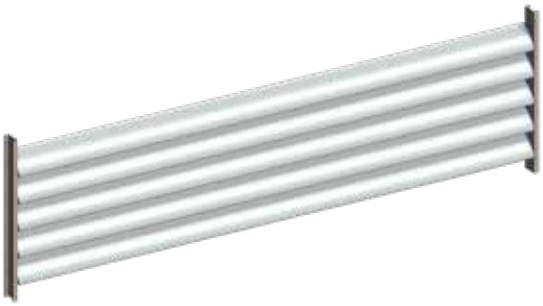

VERTICAL END FIXED PANEL -
90MM MIDI HORIZONTAL LOUVRES

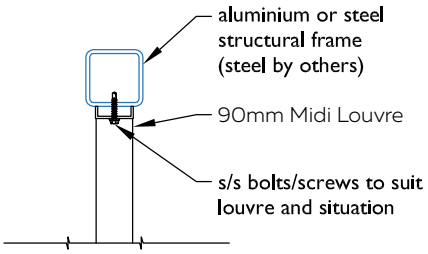


WITHIN SIDE CHANNEL
NO END CAPS REQUIRED



OVERHEAD END FIXED PANEL -
90MM MIDI HORIZONTAL LOUVRES

SECTION IN CHANNEL

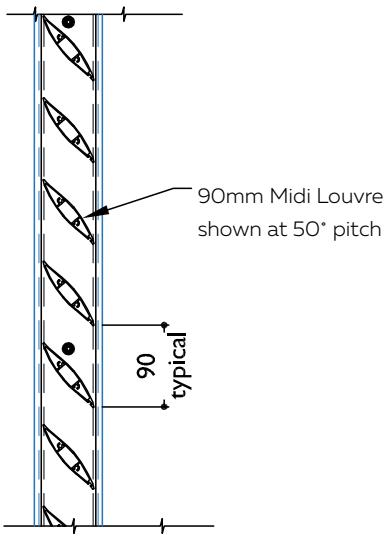


WITHIN SIDE CHANNEL
NO END CAPS REQUIRED


©Louvretec 2025 – All Rights Reserved. Technical specifications subject to change without notice.

**TYPICAL DETAIL : END FIXED 95MM BELLA VISTA**
(GROUP 1 LOUVRES COLLECTION)

PLAN

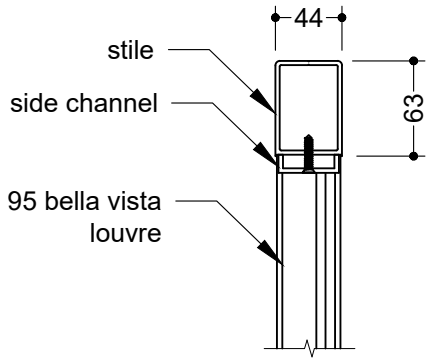


END FIXED 95MM BELLA VISTA IN DOOR PANEL

**TYPICAL DETAIL: END FIXED 95MM BELLA VISTA HEAVY**
(GROUP 1 LOUVRES COLLECTION)

PLAN

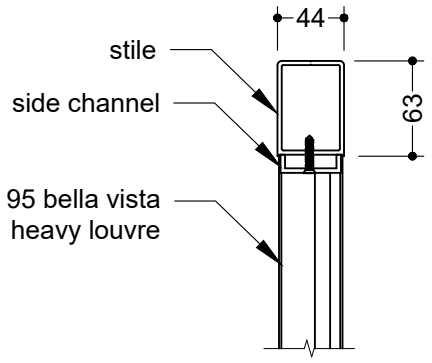


END FIXED 95MM BELLA VISTA HEAVY IN DOOR PANEL

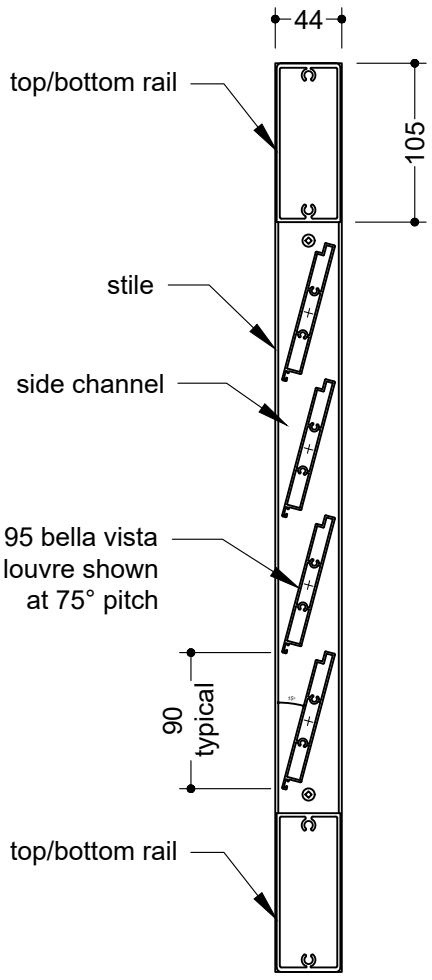


END FIXED 95MM BELLA IN DOOR PANEL

SECTION

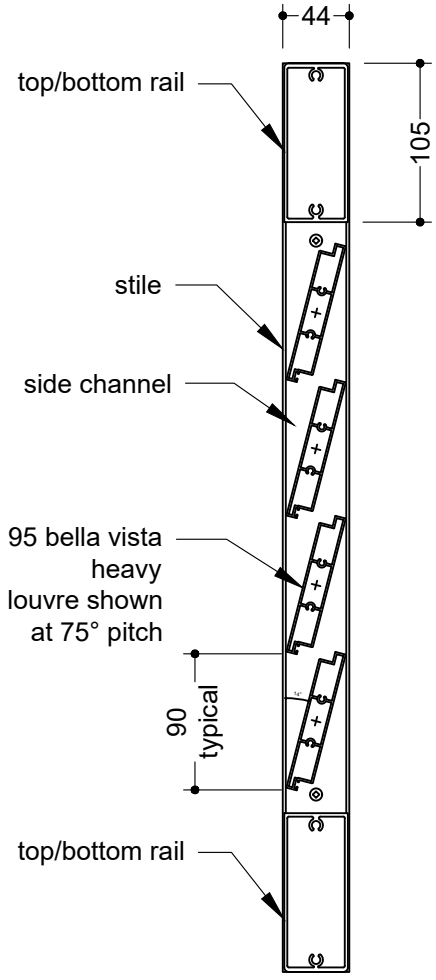


END FIXED 95MM BELLA VISTA HEAVY IN DOOR PANEL



FILE: SUN LOUVRES END FIXED 10.4.10 DATE MODIFIED: 01/10/2024 SCALE:
www.louvretec.co.nz www.louvretec.com.au

©Louvretec 2025 – All Rights Reserved. Technical specifications subject to change without notice.

# TYPICAL DETAIL: END FIXED OVERHEAD SUN LOUVRES
## SPANS AT A GLANCE: 90MM MIDI, 90MM BELLA VISTA, 95MM BELLA VISTA HEAVY

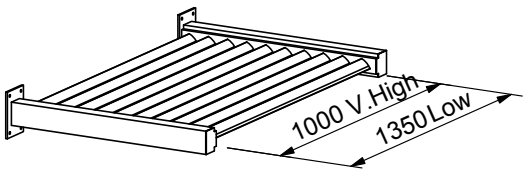


FREE SPAN EXAMPLE
Spans, End Fixed 90mm Midi Louvre

CALCULATIONS FOR BLADE SPANS
SHOW RANGE FROM:
Low Wind Zone 115km/h, 32m/s to
Extra High Wind Zone 198km/h, 55 m/s
Refer Engineering Details. Section 13

KEY
LF = Free span
LS15 = Strut @ 15˚
LS30 = Strut @ 30˚
LS45 = Strut @ 45˚

Plain Column:
Low - Med Wind Zone.
Up to 133Km/h - 37m/s

Shaded Column:
High - VHigh Wind Zone.
Up to 179Km/h - 50m/s

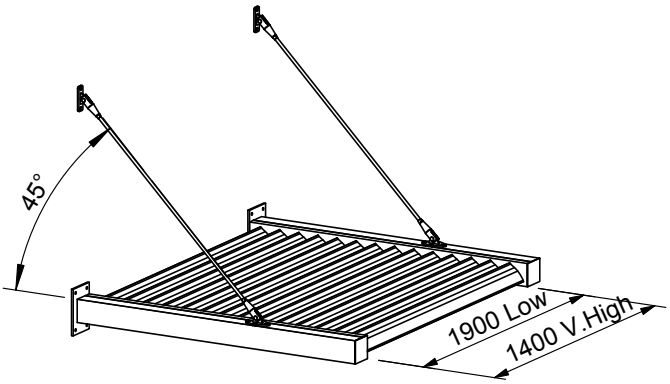


Ø20 SS STRUT SUPPORT EXAMPLE
Strut at optimum 45° angle
Spans, End Fixed 90mm Midi Louvre

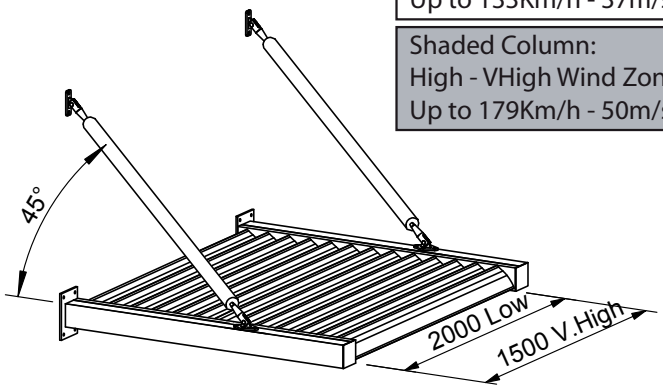


Ø42 SS STRUT SUPPORT EXAMPLE
Strut at optimum 45° angle
Spans, End Fixed 90mm Midi Louvre

# TYPICAL DETAIL: END FIXED OVERHEAD WALL STRUTS
## 90MM MIDI | 95MM BELLA VISTA | 95MM BELLA VISTA HEAVY (GROUP 1 LOUVRES COLLECTION)

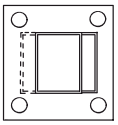

Base Plate: 100 x 150 x 6mm
Box Section: 75 x 50 x 2.5mm
Channel: 75 x 25 x 3mm

Free Span

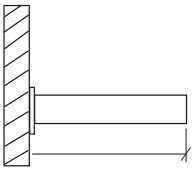

| LF | LF |
|---|---|
| 700 | 600 |

Strut Support

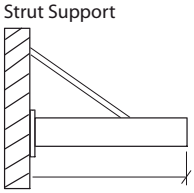

Strut Ø16mm
Stainless steel

| LS15 | LS15 |
|---|---|
| 1100 | 900 |

| LS30 | LS30 |
|---|---|
| 1100 | 1000 |

| LS45 | LS45 |
|---|---|
| 1300 | 1000 |

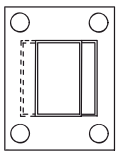

Base Plate: 100 x 225 x 6mm
Box Section: 100 x 50 x 3mm
Channel: 100 x 25 x 3mm

Free Span

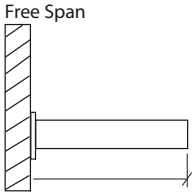

| LF | LF |
|---|---|
| 900 | 800 |

Strut Support

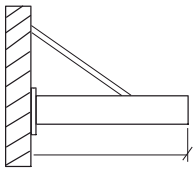

Strut Ø20mm
Stainless steel

| LS15 | LS15 |
|---|---|
| 1400 | 1200 |

| LS30 | LS30 |
|---|---|
| 1700 | 1300 |

| LS45 | LS45 |
|---|---|
| 1700 | 1400 |

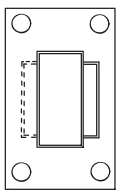

Base Plate: 100 x 275 x 6mm
Box Section: 150 x 50 x 3mm
Channel: 100 x 25 x 3mm

Free Span

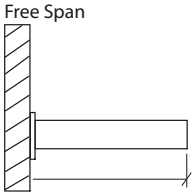

| LF | LF |
|---|---|
| 1300 | 1200 |

Strut Support

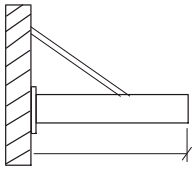

Strut Ø42mm
Stainless steel

| LS15 | LS15 |
|---|---|
| 2000 | 1600 |

| LS30 | LS30 |
|---|---|
| 2100 | 1900 |

| LS45 | LS45 |
|---|---|
| 2300 | 2000 |


©Louvretec 2025 – All Rights Reserved. Technical specifications subject to change without notice.

# GROUP 2 LOUVRES

Medium size Rectangular louvres: 135 Hi-Span, 165 Hi-Span

## 135MM HI-SPAN BALUSTRADE LOUVRES

Operable or end fixed balustrade louvres

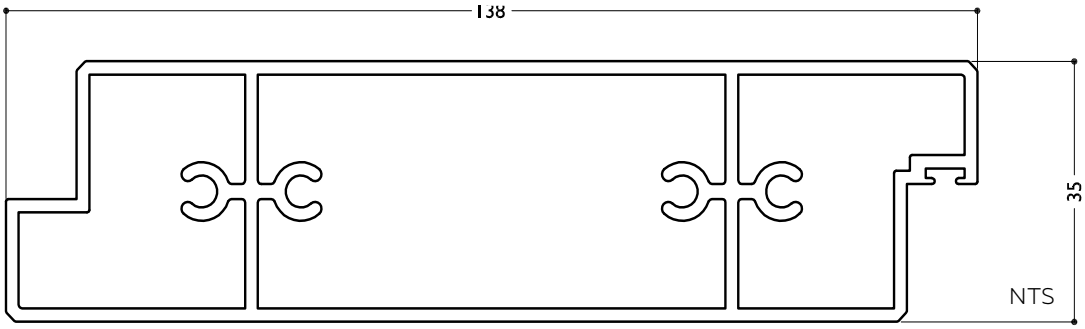


REFER TECHNICAL DETAILS PAGE 10.2.38



135MM HI-SPAN LOUVRE

**NEW ZEALAND COMPLIANT OPERABLE OR FIXED BALUSTRADE SYSTEM**

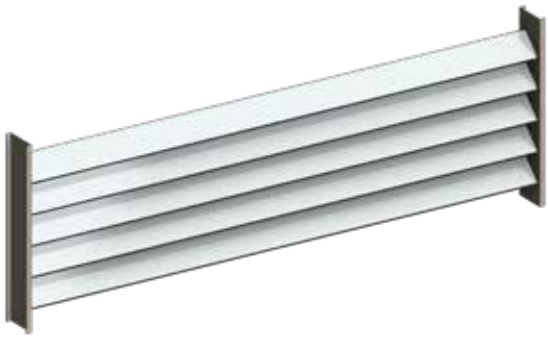

VERTICAL END FIXED PANEL -
135MM HI-SPAN HORIZONTAL LOUVRES

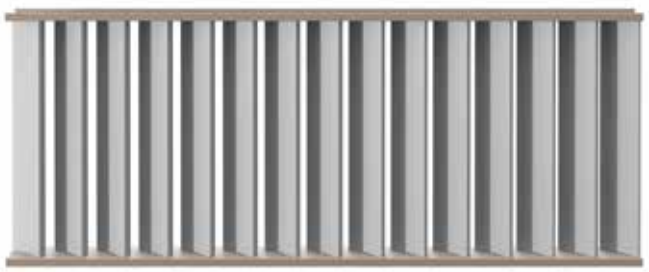

VERTICAL END FIXED PANEL
135MM HI-SPAN VERTICAL LOUVRES



©Louvretec 2025 – All Rights Reserved. Technical specifications subject to change without notice.

## NEW ZEALAND COMPLIANT OPERABLE OR FIXED BALUSTRADE SYSTEM

PLAN - END FIXED 135 HI-SPAN LOUVRE

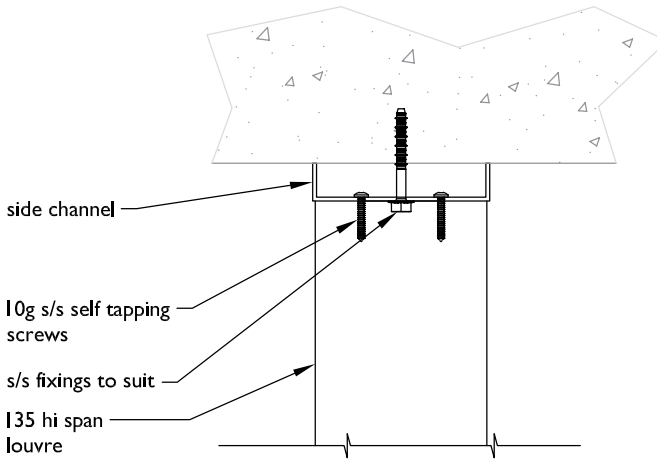


END FIXED 135 HI-SPAN LOUVRE

SECTION - END FIXED 135MM HI-SPAN LOUVRE

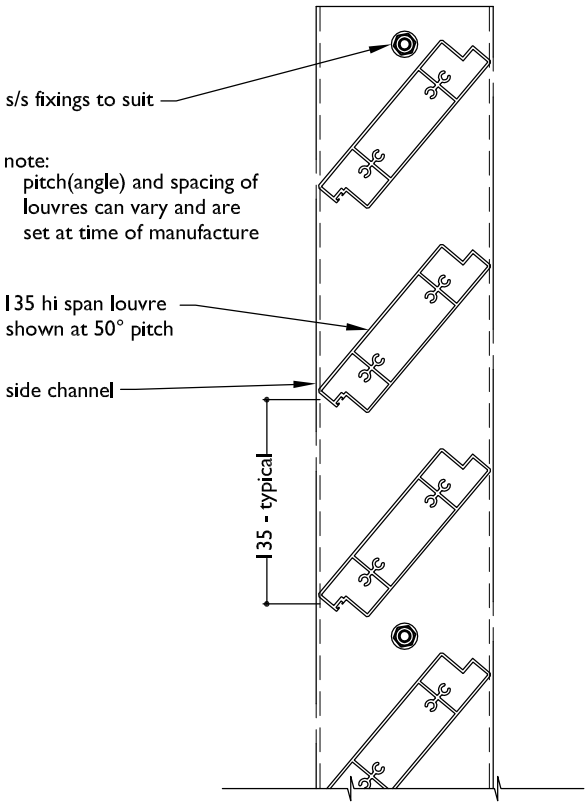


END FIXED 135 HI-SPAN LOUVRE


©Louvretec 2025 – All Rights Reserved. Technical specifications subject to change without notice.

# GROUP 2 LOUVRES

Medium size Rectangular louvres: 135 Hi-Span, 165 Hi-Span

## 165MM HI-SPAN BALUSTRADE LOUVRES

Operable or end fixed balustrade louvres

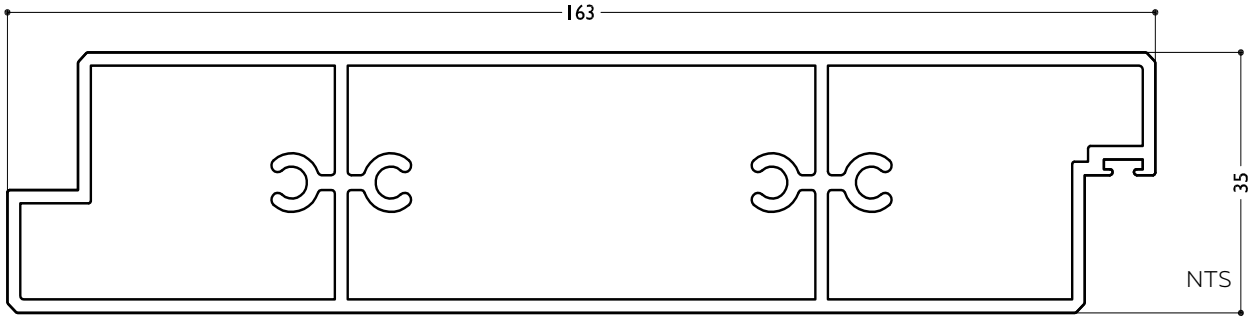


REFER TECHNICAL DETAILS PAGE 10.2.42



165MM HI-SPAN LOUVRE

**AUSTRALIAN COMPLIANT OPERABLE OR FIXED BALUSTRADE SYSTEM**



VERTICAL END FIXED PANEL -
165MM HI-SPAN HORIZONTAL LOUVRES

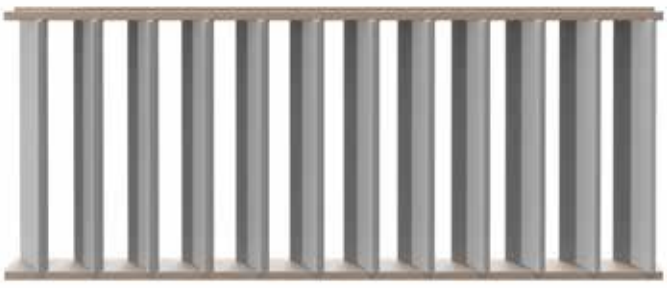

VERTICAL END FIXED PANEL -
165MM HI-SPAN VERTICAL LOUVRES



©Louvretec 2025 – All Rights Reserved. Technical specifications subject to change without notice.

## AUSTRALIAN COMPLIANT OPERABLE OR FIXED BALUSTRADE SYSTEM

PLAN - END FIXED 165 HI-SPAN

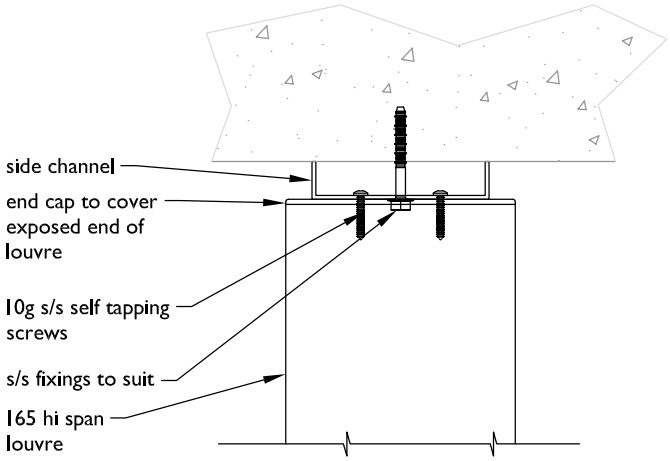


END FIXED 165 HI-SPAN LOUVRE

SECTION - END FIXED 165 HI-SPAN LOUVRE

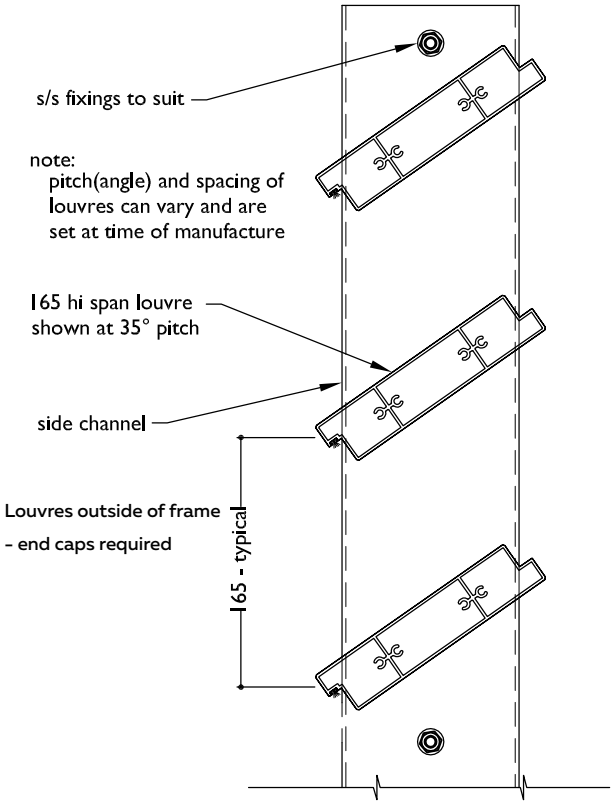


END FIXED 165 HI-SPAN LOUVRE


©Louvretec 2025 – All Rights Reserved. Technical specifications subject to change without notice.

# GROUP 3 LOUVRES

Medium size Airfoil louvres: 120mm Airfoil, 180mm Airfoil, 150 Midi, 200 Maxi

## 120MM AIRFOIL LOUVRE

A wide range of design applications

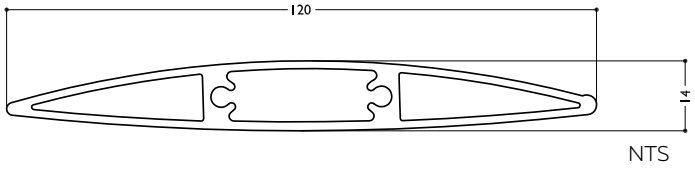


NTS



120MM AIRFOIL LOUVRE

REFER TECHNICAL DETAILS PAGES 10.2.18

## 150MM MIDI LOUVRE

A wave shaped louvre

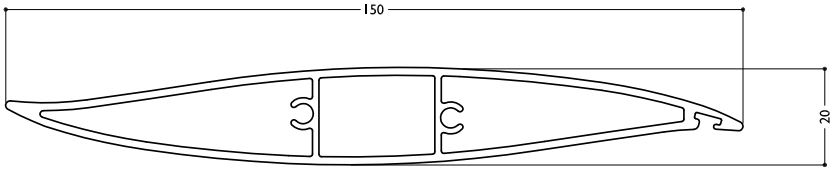


NTS



150MM MIDI LOUVRE

REFER TECHNICAL DETAILS PAGES 10.2.23

## 180MM AIRFOIL LOUVRE

A solution for wider openings

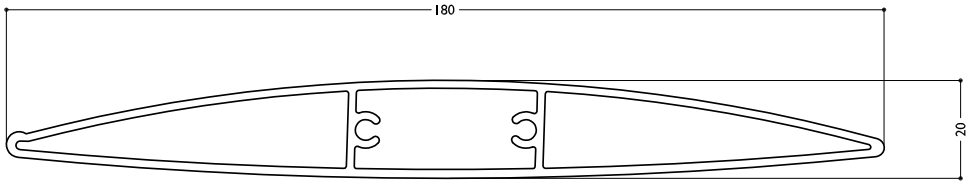


NTS



180MM AIRFOIL LOUVRE

REFER TECHNICAL DETAILS PAGES 10.2.20

## 200MM MAXI LOUVRE

Most specified Maxi Louvre

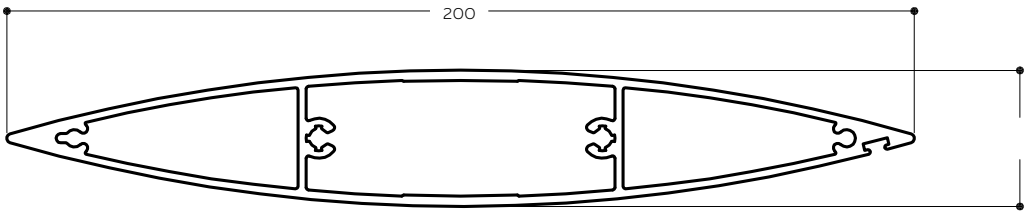


NTS

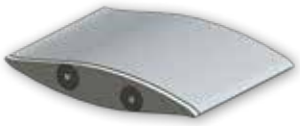

200MM AIRFOIL LOUVRE

REFER TECHNICAL DETAILS PAGES 10.2.25



©Louvretec 2025 – All Rights Reserved. Technical specifications subject to change without notice.

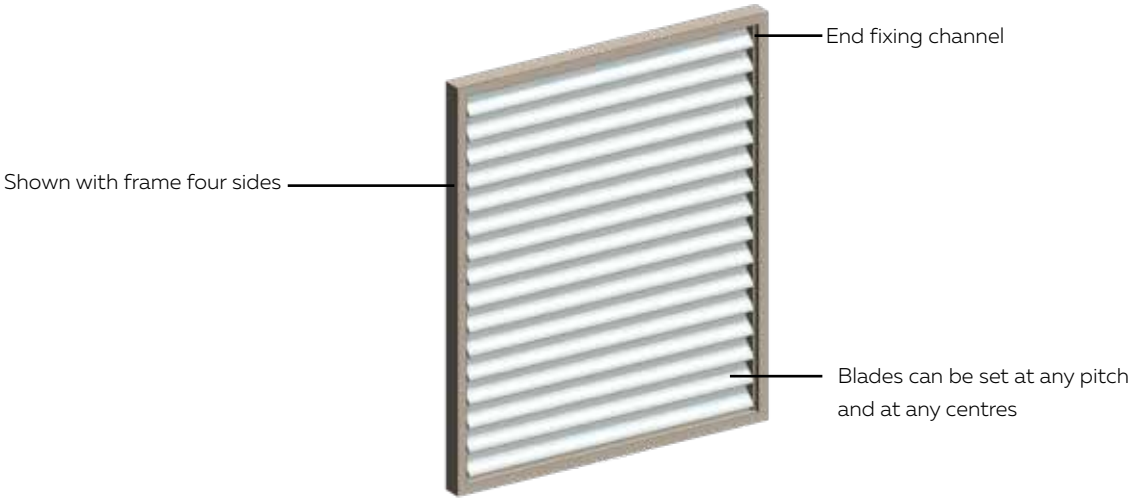


VERTICAL END FIXED PANEL -
HORIZONTAL LOUVRES

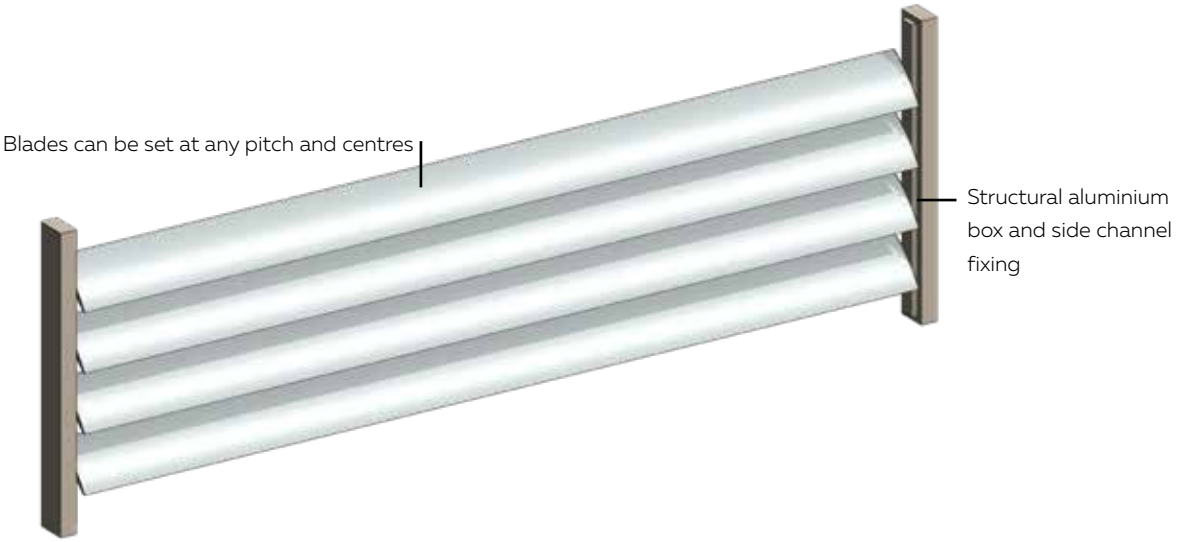


VERTICAL END FIXED PANEL -
HORIZONTAL LOUVRES

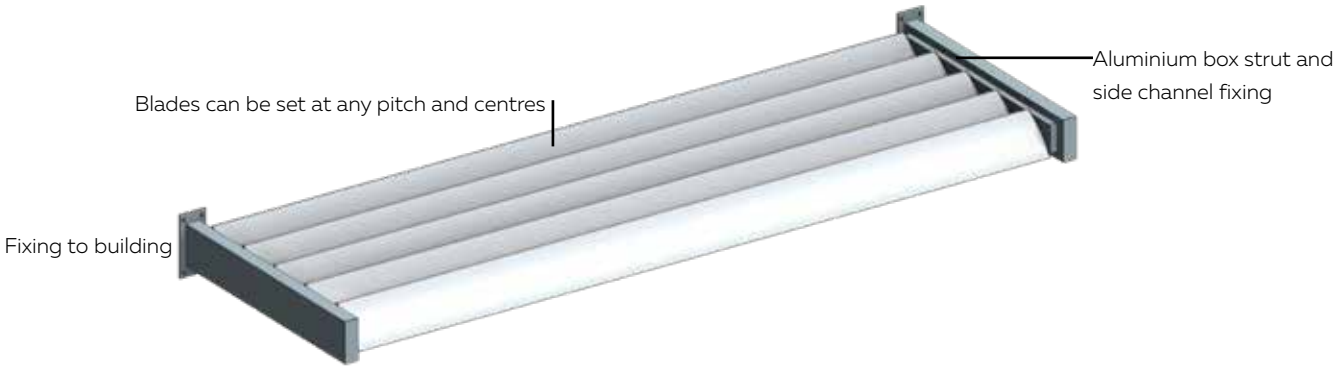


OVERHEAD END FIXED PANEL -
HORIZONTAL LOUVRES


©Louvretec 2025 – All Rights Reserved. Technical specifications subject to change without notice.

## PLAN - END FIXED 120MM AIRFOIL LOUVRE

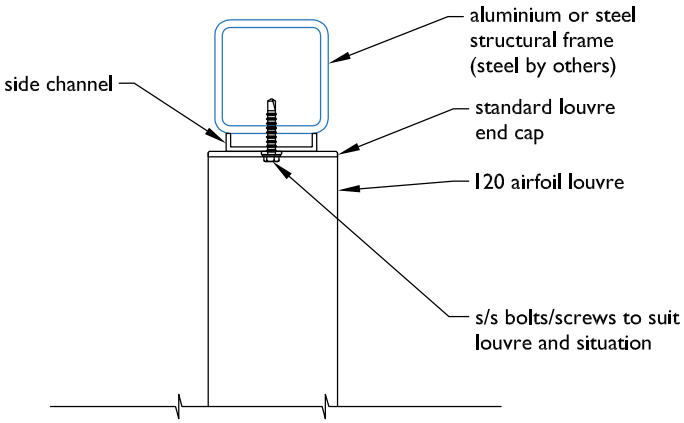


Louvres outdside channel - end caps required

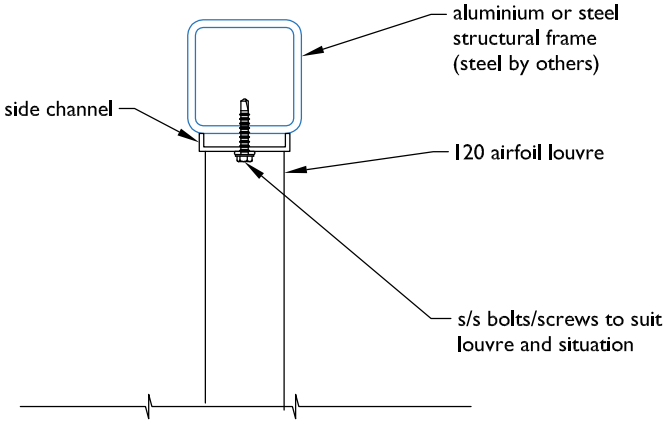


Louvres within side channel - no end caps required

## SECTION - END FIXED 120MM AIRFOIL LOUVRE

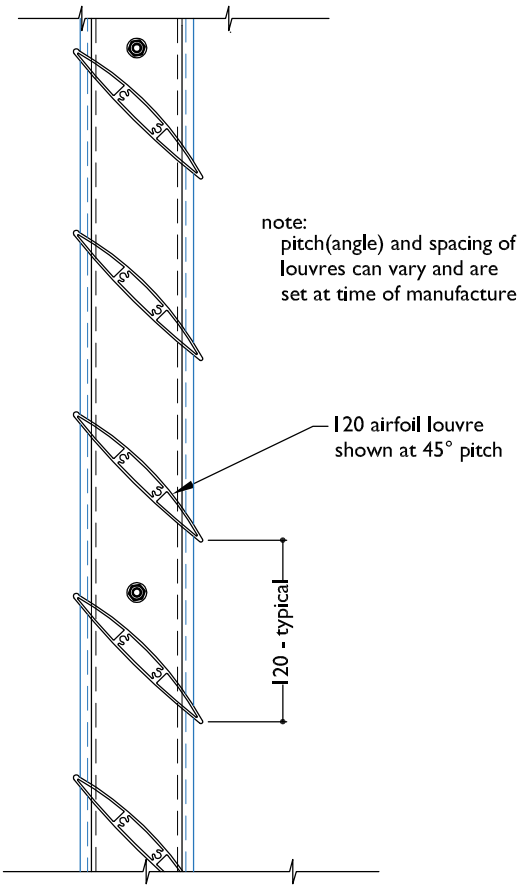


Louvres outside side channel - end caps required

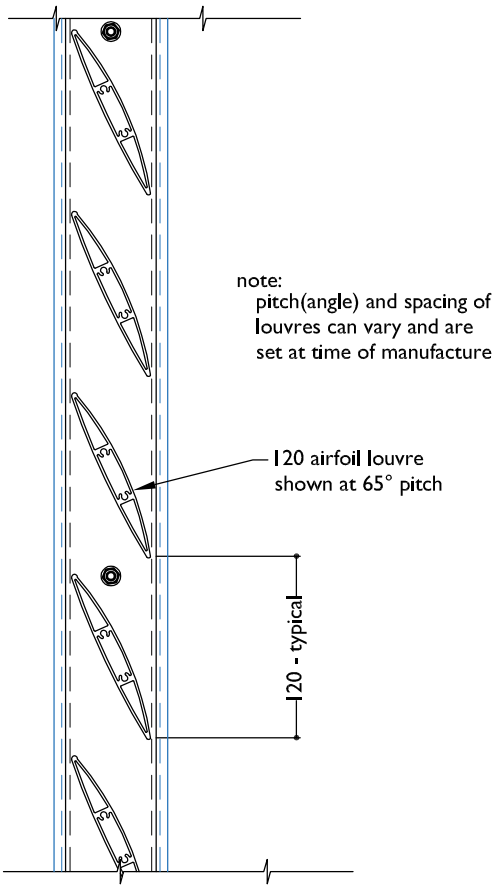


Louvres within side channel - no end caps required



FILE: SUN LOUVRES END FIXED 10.4.18 DATE MODIFIED: 01/10/2024 SCALE:

www.louvretec.co.nz www.louvretec.com.au
©Louvretec 2025 - All Rights Reserved. Technical specifications subject to change without notice.

## PLAN - END FIXED 150MM MIDI LOUVRE

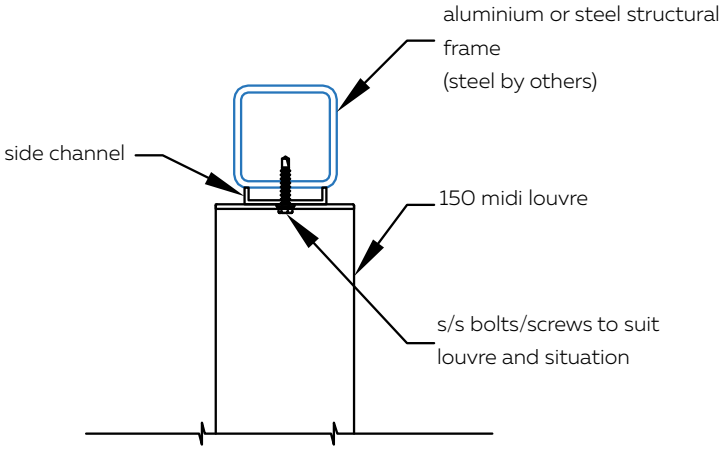


Louvres outside side channel - end caps required

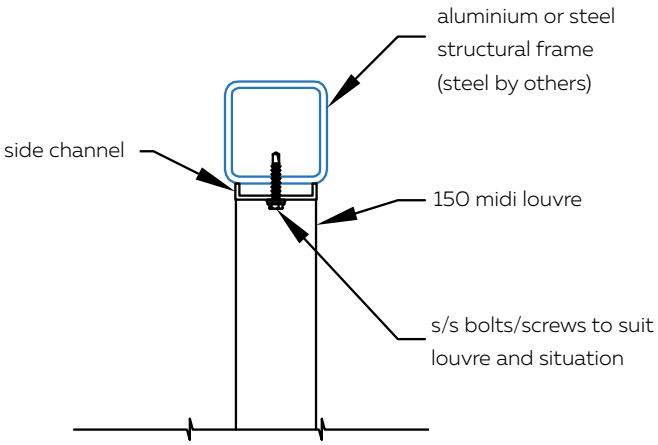


Within side channel - no end caps required

## SECTION - END FIXED 150MM MIDI LOUVRE

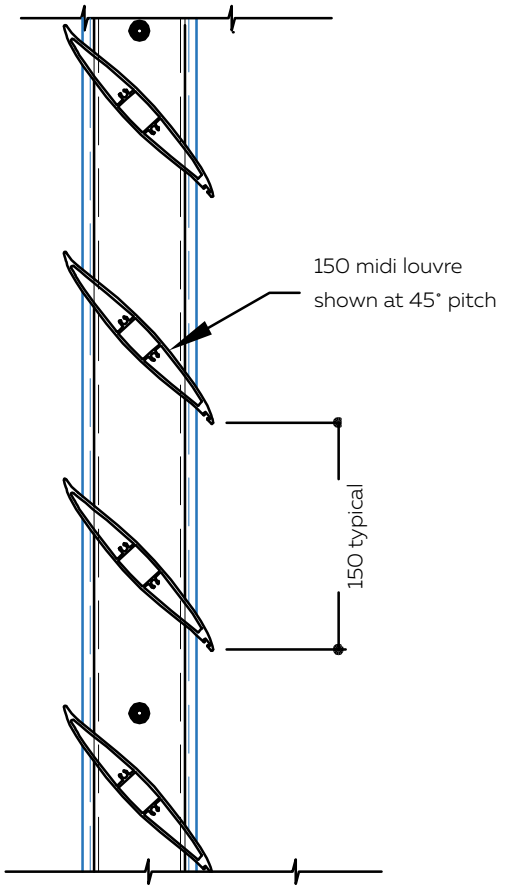


Louvres outside side channel - end caps required

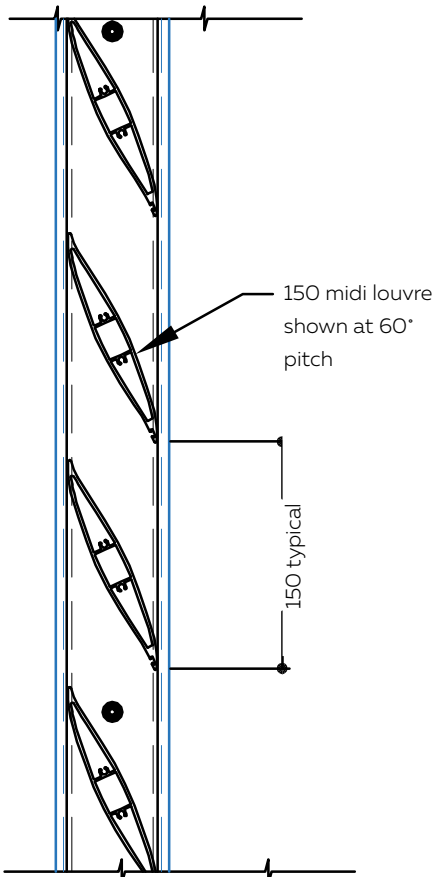


Within side channel - no end caps required


©Louvretec 2025 - All Rights Reserved. Technical specifications subject to change without notice.

## TYPICAL DETAIL : END FIXED OVERHEAD SUN LOUVRES
## SPANS AT A GLANCE 120MM AIRFOIL & 150MM MIDI LOUVRES (GROUP 3 LOUVRES COLLECTION)

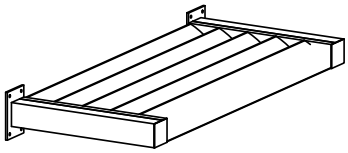

FREE SPAN EXAMPLE

CALCULATIONS FOR BLADE SPANS
SHOW RANGE FROM:
Low Wind Zone 115km/h, 32m/s to
Extra High Wind Zone 198km/h, 55 m/s
Refer Engineering Details. Section 13

KEY
LF = Free span
LS15 = Strut @ 15˚
LS30 = Strut @ 30˚
LS45 = Strut @ 45˚

Plain Column:
Low - Med Wind Zone.
Up to 133Km/h - 37m/s

Shaded Column:
High - VHigh Wind Zone.
Up to 179Km/h - 50m/s

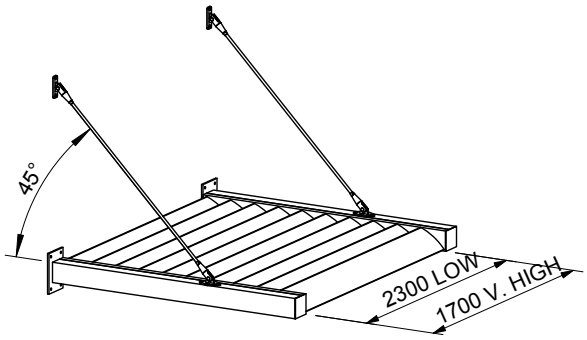


Ø20 SS Strut Support Example,
Strut at Optimum 45° angle.

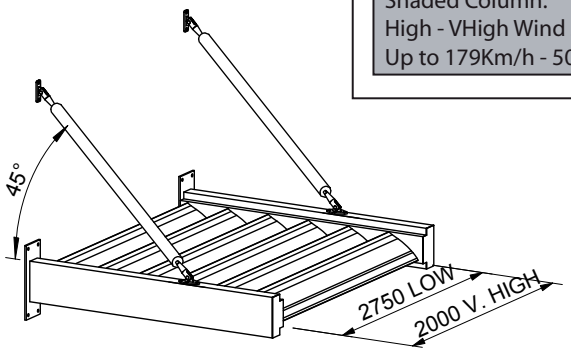


Ø42 SS Strut Support Example,
Strut at Optimum 45° angle.

Ø20 SS STRUT SUPPORT EXAMPLE
Strut at optimum 45° angle
SPANS; END FIXED 120mm AIRFOIL LOUVRE

Ø42 SS STRUT SUPPORT EXAMPLE
Strut at optimum 45° angle
SPANS; END FIXED 150mm MIDI LOUVRE

## TYPICAL DETAIL: END FIXED OVERHEAD WALL STRUTS
## SPANS AT A GLANCE 120MM AIRFOILS & 150MM MIDI LOUVRES (GROUP 3 LOUVRES COLLECTION)

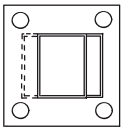

Base Plate: 100 x 150 x 6mm
Box Section: 75 x 50 x 2.5mm
Channel: 75 x 25 x 3mm

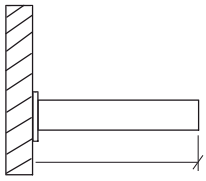

| LF | LF |
|---|---|
| 600 | 500 |

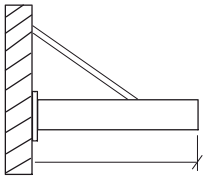

Strut Ø16mm
Stainless steel

| LS15 | LS15 |
|---|---|
| 1000 | 800 |

| LS30 | LS30 |
|---|---|
| 1100 | 900 |

| LS45 | LS45 |
|---|---|
| 1100 | 900 |

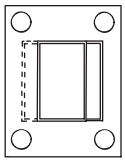

Base Plate: 100 x 225 x 6mm
Box Section: 100 x 50 x 3mm
Channel: 100 x 25 x 3mm

Free Span

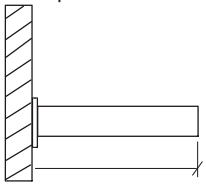

| LF | LF |
|---|---|
| 800 | 700 |

Strut Support

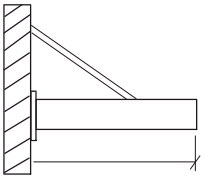

Strut Ø20mm
Stainless steel

| LS15 | LS15 |
|---|---|
| 1200 | 1000 |

| LS30 | LS30 |
|---|---|
| 1400 | 1200 |

| LS45 | LS45 |
|---|---|
| 1500 | 1200 |

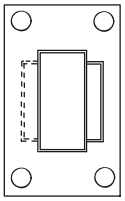

Base Plate: 100 x 275 x 6mm
Box Section: 150 x 50 x 3mm
Channel: 100 x 25 x 3mm

Free Span

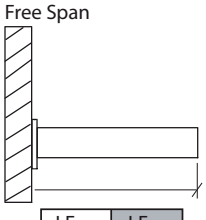

| LF | LF |
|---|---|
| 1200 | 1000 |

Strut Support

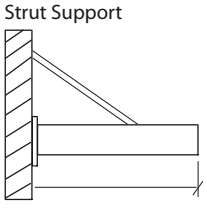

Strut Ø42mm
Stainless steel

| LS15 | LS15 |
|---|---|
| 1700 | 1300 |

| LS30 | LS30 |
|---|---|
| 1800 | 1600 |

| LS45 | LS45 |
|---|---|
| 2000 | 1700 |



FILE: SUN LOUVRES END FIXED 10.4.20 DATE MODIFIED: 01/10/2024 SCALE:
www.louvretec.co.nz www.louvretec.com.au

©Louvretec 2025 - All Rights Reserved. Technical specifications subject to change without notice.

## PLAN - END FIXED 180MM AIRFOIL LOUVRE

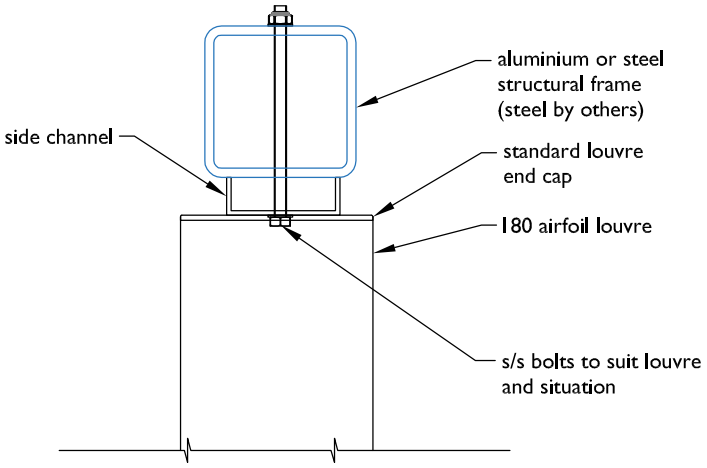


Louvres outside side channel - end caps required

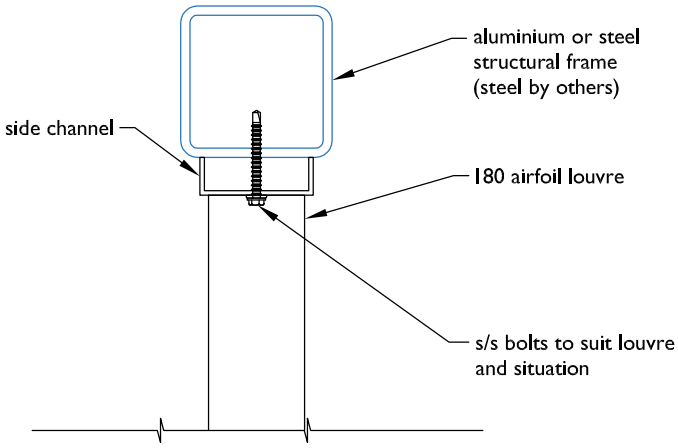


Within side channel - no end caps required

## SECTION - END FIXED 180MM AIRFOIL LOUVRE

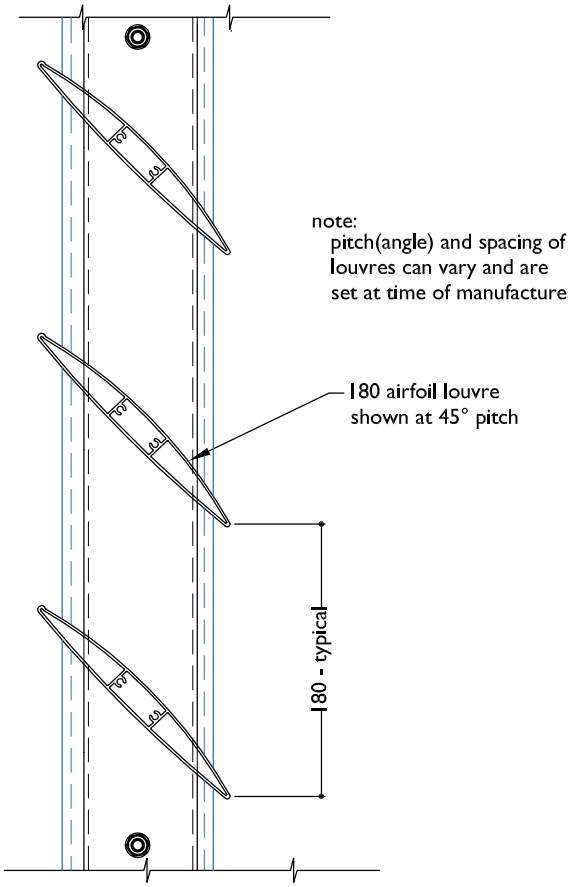


Louvres outside side channel - end caps required

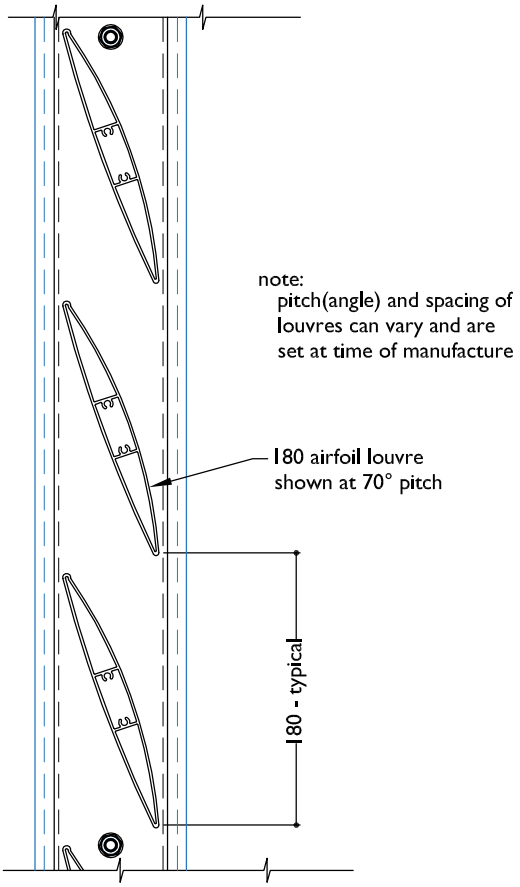


Within side channel - no end caps required


©Louvretec 2025 - All Rights Reserved. Technical specifications subject to change without notice.

**TYPICAL DETAIL : END FIXED**
**200MM MAXI LOUVRES**

(GROUP 3 LOUVRES COLLECTION)

## PLAN - END FIXED 200 MAXI LOUVRE

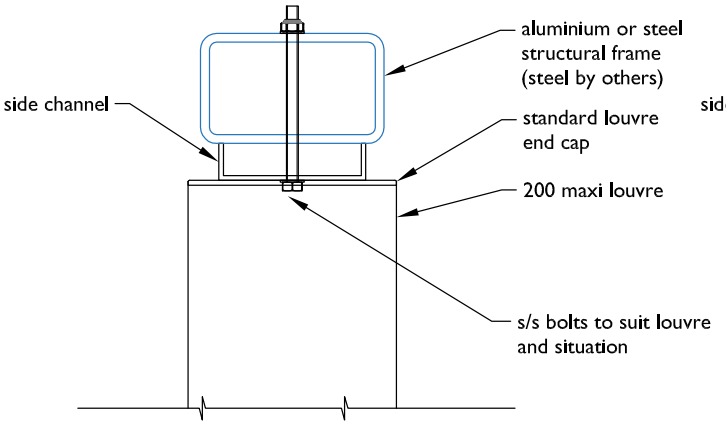


Louvres outdside channel - end caps required

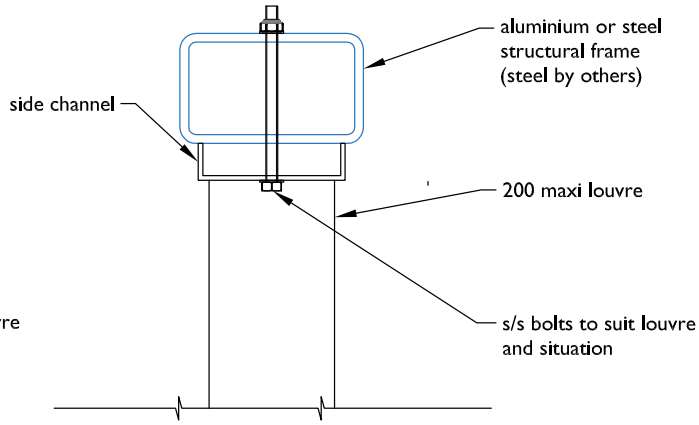


Louvres within side channel - no end caps required

## SECTION - END FIXED 200MM MAXI LOUVRE

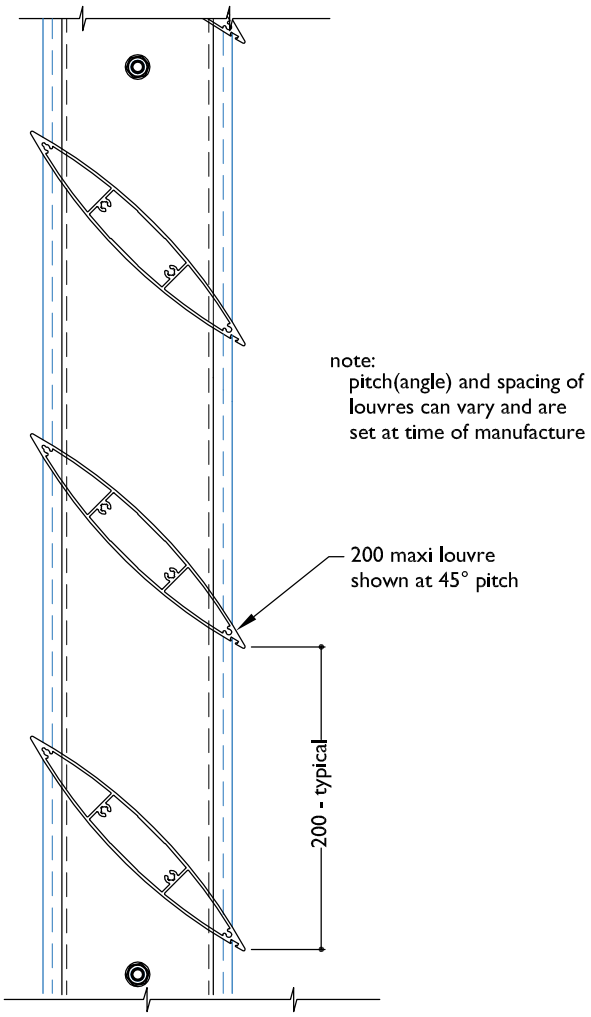


Louvres outside side channel - end caps required

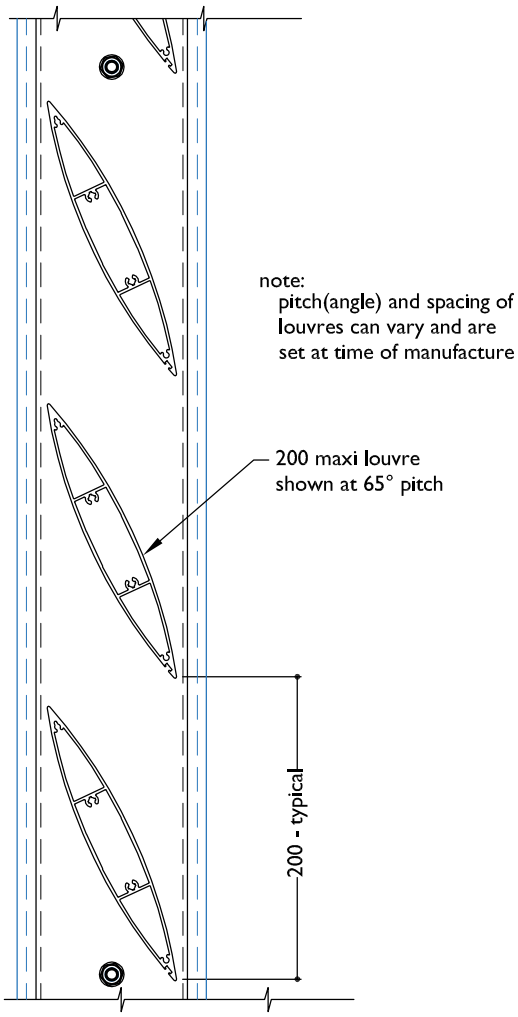


Louvres within side channel - no end caps required



FILE: SUN LOUVRES END FIXED 10.4.22 DATE MODIFIED: 01/10/2024 SCALE:

www.louvretec.co.nz www.louvretec.com.au

©Louvretec 2025 - All Rights Reserved. Technical specifications subject to change without notice.

# TYPICAL DETAIL: END FIXED OVERHEAD SUN LOUVRES
# SPANS AT A GLANCE 180MM AIRFOIL & 200MM MAXI LOUVRES

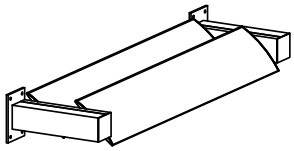

FREE SPAN EXAMPLE

CALCULATIONS FOR BLADE SPANS
SHOW RANGE FROM:
Low Wind Zone 115km/h, 32m/s to
Extra High Wind Zone 198km/h, 55 m/s
Refer Engineering Details. Section 13

KEY
LF = Free span
LS15 = Strut @ 15˚
LS30 = Strut @ 30˚
LS45 = Strut @ 45˚

Plain Column:
Low - Med Wind Zone.
Up to 133Km/h - 37m/s

Shaded Column:
High - VHigh Wind Zone.
Up to 179Km/h - 50m/s

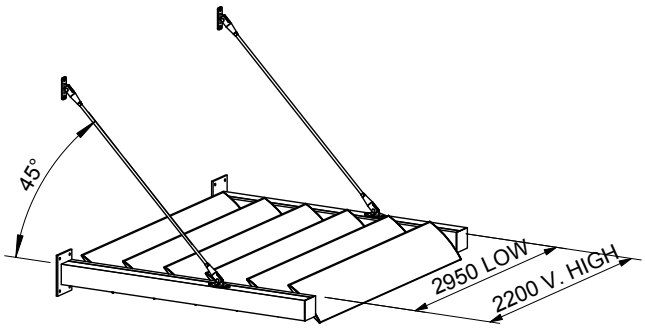


Ø20 SS STRUT SUPPORT EXAMPLE
Strut at optimum 45° angle
Spans, End Fixed 180mm Airfoil Louvre

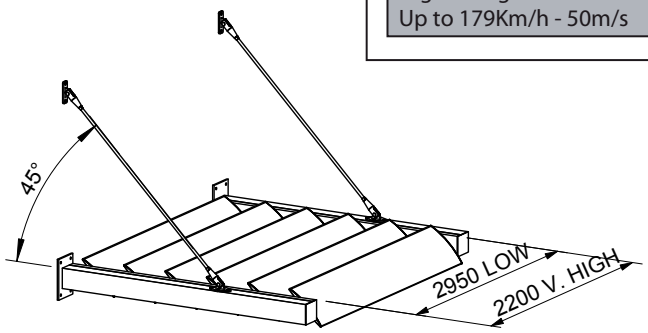


Ø42 SS STRUT SUPPORT EXAMPLE
Strut at optimum 45° angle
Spans, End Fixed 200mm Midi Louvre

## TYPICAL DETAIL: END FIXED OVERHEAD WALL STRUTS 180MM AIRFOIL | 200MM MAXI LOUVRES
## SPANS AT A GLANCE (GROUP 3 LOUVRES COLLECTION)

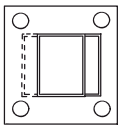

Base Plate: 100 x 150 x 6mm
Box Section: 75 x 50 x 2.5mm
Channel: 75 x 25 x 3mm

Free Span

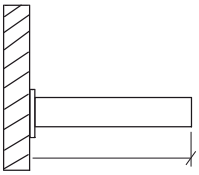

| LF | LF |
|---|---|
| 500 | 500 |

Strut Support

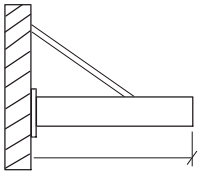

Strut Ø16mm
Stainless steel

| LS15 | LS15 |
|---|---|
| 800 | 600 |

| LS30 | LS30 |
|---|---|
| 900 | 700 |

| LS45 | LS45 |
|---|---|
| 900 | 700 |

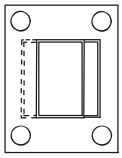

Base Plate: 100 x 225 x 6mm
Box Section: 100 x 50 x 3mm
Channel: 100 x 25 x 3mm

Free Span

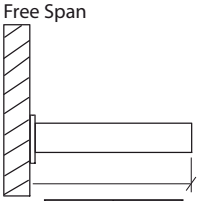

| LF | LF |
|---|---|
| 700 | 600 |

Strut Support

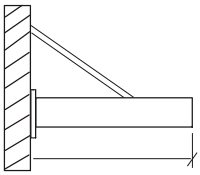

Strut Ø20mm
Stainless steel

| LS15 | LS15 |
|---|---|
| 1000 | 800 |

| LS30 | LS30 |
|---|---|
| 1200 | 1000 |

| LS45 | LS45 |
|---|---|
| 1200 | 1000 |

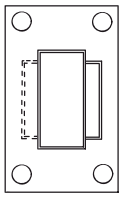

Base Plate: 100 x 275 x 6mm
Box Section: 150 x 50 x 3mm
Channel: 100 x 25 x 3mm

Free Span

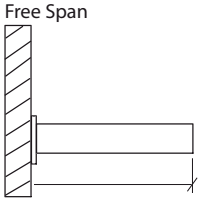

| LF | LF |
|---|---|
| 1000 | 900 |

Strut Support

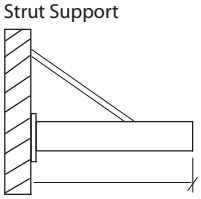

Strut Ø42mm
Stainless steel

| LS15 | LS15 |
|---|---|
| 1300 | 1100 |

| LS30 | LS30 |
|---|---|
| 1600 | 1300 |

| LS45 | LS45 |
|---|---|
| 1600 | 1400 |


©Louvretec 2025 – All Rights Reserved. Technical specifications subject to change without notice.

# GROUP 4 LOUVRES

Weatherboard shaped louvres: 150mm Helena Bay, 125mm Weatherboard Panel, 180mm Weatherboard Panel

## 150MM HELENA BAY 45° FIXED WEATHERBOARD PANEL

Wall panel | sun louvre | balustrade

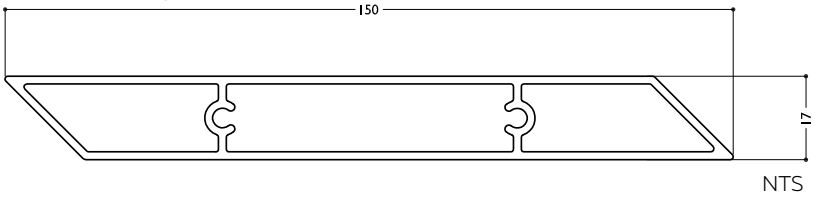




150MM HELENA BAY 45° FIXED

REFER TECHNICAL DETAILS PAGES 10.4.25

## 125MM WEATHERBOARD PANEL

Wall panel | sun louvre | balustrade

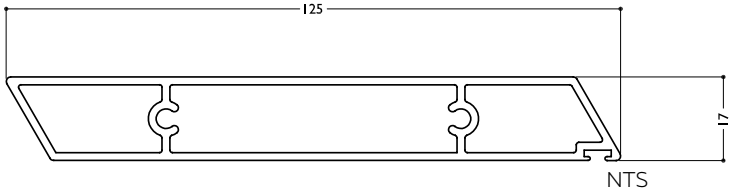




125MM WEATHERBOARD PANEL

REFER TECHNICAL DETAILS PAGES 10.4.26

## 180MM WEATHERBOARD PANEL

Wall panel | sun louvre | balustrade

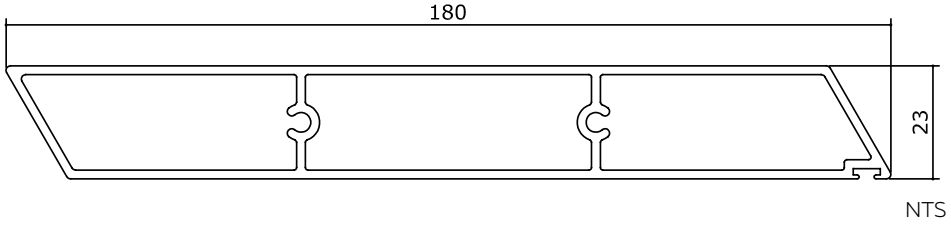




180MM WEATHERBOARD PANEL

REFER TECHNICAL DETAILS PAGES 10.4.27



©Louvretec 2025 – All Rights Reserved. Technical specifications subject to change without notice.



## BLADE SPECIFICATIONS 150MM HELENA BAY 45° FIXED

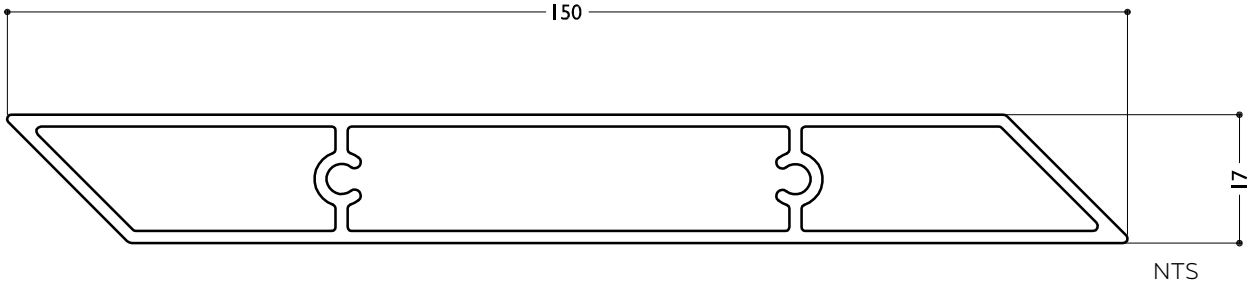


| BLADE SPECIFICATIONS - END OR BRACKET FIXED ONLY | | | |
|---|---|---|---|
| Blade cover - opening system | N/A | Weight per linear metre - opening system | 1.5 kg/lm |
| Weight per square metre - opening system | N/A | Actual blade width | 148 mm |
| Blade centres - opening system | N/A | | |

### SPANS AT A GLANCE

Refer Engineering Section. Climate, terrain, shielding, location, type of structure contribute to determine spans.

| WIND ZONE | INSIDE | LOW | MEDIUM | HIGH | VERY HIGH | EXTRA HIGH |
|---|---|---|---|---|---|---|
| Factored wind speed at building | Self wt | 32 m/s<br>115 km/hr | 37m/s<br>133 km/hr | 44 m/s<br>158 km/hr | 50 m/s<br>179 km/hr | 55 m/s<br>198 km/hr |
| Fixed, Horizontal & Vertical | 3200 | 3050 | 2750 | 2400 | 2200 | 2050 |

### INSTALLATION OPTIONS

END FIXED
Louvres at any pitch
Louvres at any centre



END FIXED OVERHEAD PANEL - HORIZONTAL LOUVRES

BRACKET FIXED
Louvres at any pitch
Louvres at any centre



BRACKET FIXED VERTICAL PANEL - HORIZONTAL LOUVRES

©Louvretec 2025 - All Rights Reserved. Technical specifications subject to change without notice.



## BLADE SPECIFICATIONS 125MM WEATHERBOARD PANEL

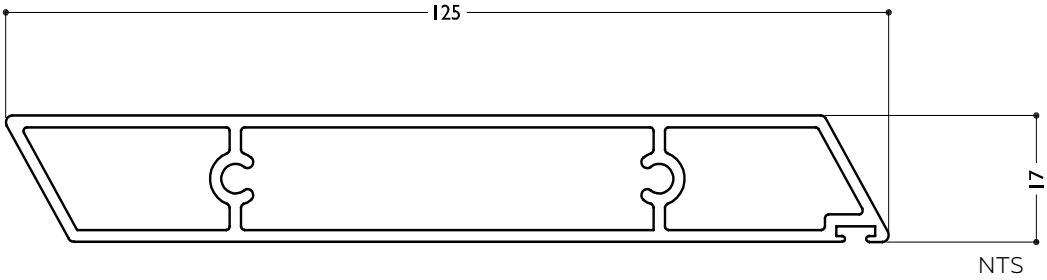


| BLADE SPECIFICATIONS | | | |
|---|---|---|---|
| Blade cover - opening system | 115 mm | Weight per linear metre - opening system | 1.33 kg/lm |
| Weight per square metre - opening system | 12 kg/sqm | Actual blade width | 125 mm |
| Blade centres - opening system | 115 mm | | |

### SPANS AT A GLANCE

Refer Engineering Section. Climate, terrain, shielding, location, type of structure contribute to determine spans.

| WIND ZONE | INSIDE | LOW | MEDIUM | HIGH | VERY HIGH | EXTRA HIGH |
|---|---|---|---|---|---|---|
| Factored wind speed at building | Self wt | 32 m/s<br>115 km/hr | 37m/s<br>133 km/hr | 44 m/s<br>158 km/hr | 50 m/s<br>179 km/hr | 55 m/s<br>198 km/hr |
| Adjustable & Fixed, Horizontal & Vertical | 2600 | 2500 | 2300 | 2050 | 1900 | 1750 |

### INSTALLATION OPTIONS

END FIXED

Louvres at any pitch

Louvres at any centre



END FIXED VERTICAL PANEL - HORIZONTAL LOUVRES


©Louvretec 2025 – All Rights Reserved. Technical specifications subject to change without notice.



## BLADE SPECIFICATIONS 180MM WEATHERBOARD PANEL

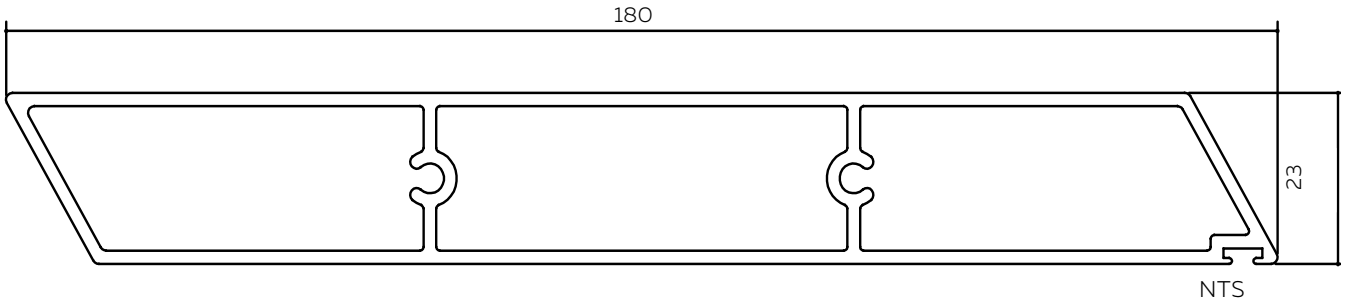


| BLADE SPECIFICATIONS - END OR BRACKET FIXED ONLY | | | |
|---|---|---|---|
| Blade cover - opening system | 169 mm | Weight per linear metre - opening system | 2.12 kg/lm |
| Weight per square metre - opening system | 13 kg/sqm | Actual blade width | 180 mm |
| Blade centres - opening system | 169 mm | | |

### SPANS AT A GLANCE

Refer Engineering Section. Climate, terrain, shielding, location, type of structure contribute to determine spans.

| WIND ZONE | INSIDE | LOW | MEDIUM | HIGH | VERY HIGH | EXTRA HIGH |
|---|---|---|---|---|---|---|
| Factored wind speed at building | Self wt | 32 m/s<br>115 km/hr | 37m/s<br>133 km/hr | 44 m/s<br>158 km/hr | 50 m/s<br>179 km/hr | 55 m/s<br>198 km/hr |
| Adjustable & Fixed, Horizontal & Vertical | 3200 | 3050 | 2800 | 2500 | 2300 | 2100 |

### INSTALLATION OPTIONS

END FIXED

Louvres at any pitch

Louvres at any centre



END FIXED OVERHEAD PANEL - HORIZONTAL LOUVRES

©Louvretec 2025 - All Rights Reserved. Technical specifications subject to change without notice.

PLAN – END FIXED
150MM HELENA BAY 45° WEATHERBOARD PANEL

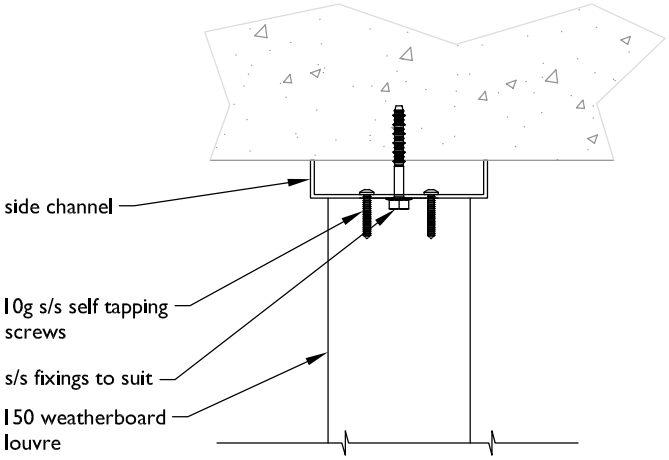


SECTION – END FIXED
150MM HELENA BAY 45°
WEATHERBOARD PANEL

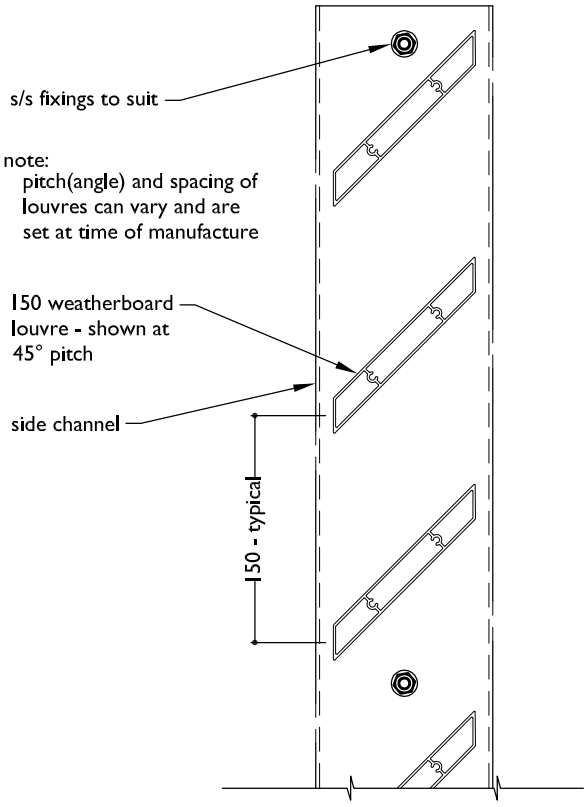



FILE: SUN LOUVRES END FIXED 10.4.28 DATE MODIFIED: 01/10/2024 SCALE:
www.louvretec.co.nz www.louvretec.com.au
©Louvretec 2025 – All Rights Reserved. Technical specifications subject to change without notice.

PLAN - END FIXED
125MM WEATHERBOARD
LOUVRE

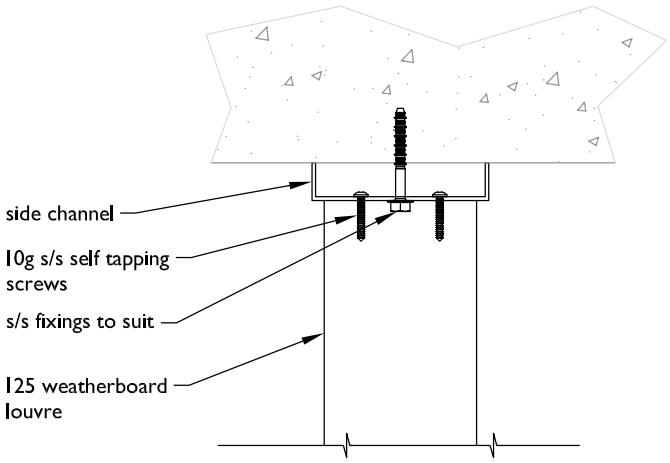


PLAN - END FIXED
180MM WEATHERBOARD
LOUVRE

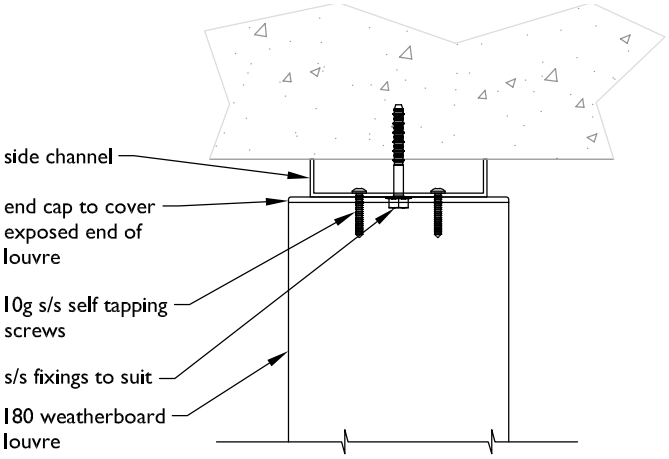


SECTION - END FIXED
125MM WEATHERBOARD
LOUVRE

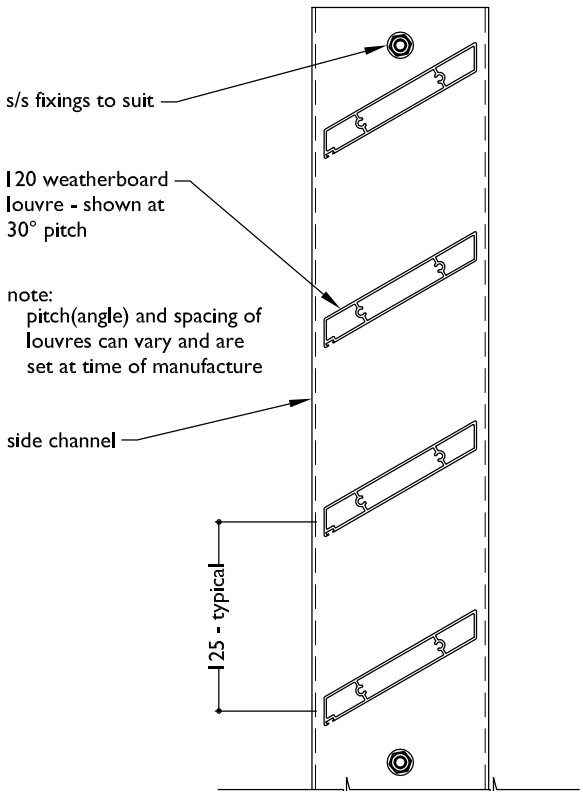


SECTION - END FIXED
180MM WEATHERBOARD
LOUVRE

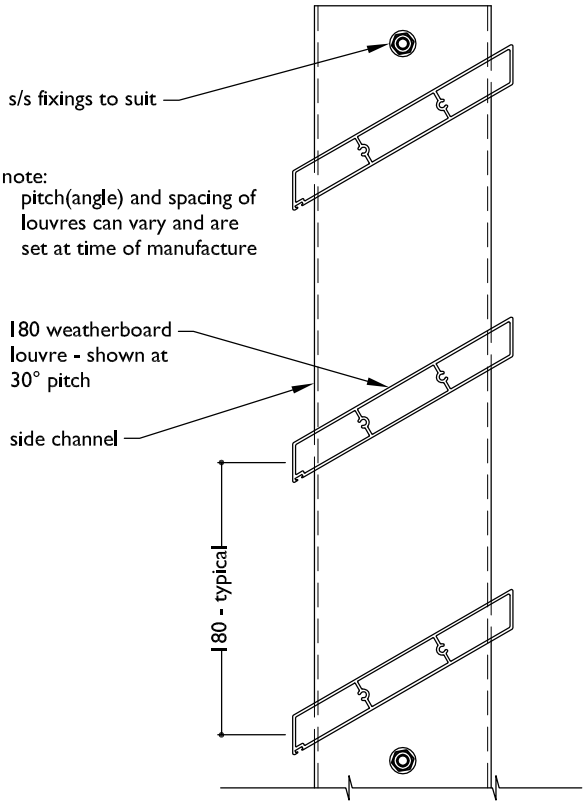



©Louvretec 2025 - All Rights Reserved. Technical specifications subject to change without notice.

## TYPICAL DETAIL : END FIXED OVERHEAD SUN LOUVRES (GROUP 4 LOUVRES COLLECTION)
## 150MM HELENA BAY 45°, 125MM WEATHERBOARD, 180MM WEATHERBOARD LOUVRES

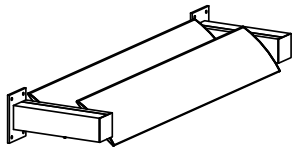

FREE SPAN EXAMPLE

CALCULATIONS FOR BLADE SPANS
SHOW RANGE FROM:
Low Wind Zone 115km/h, 32m/s to
Extra High Wind Zone 198km/h, 55 m/s
Refer Engineering Details. Section 13

KEY
LF = Free span
LS15 = Strut @ 15°
LS30 = Strut @ 30°
LS45 = Strut @ 45°

Plain Column:
Low - Med Wind Zone.
Up to 133Km/h - 37m/s

Shaded Column:
High - VHigh Wind Zone.
Up to 179Km/h - 50m/s

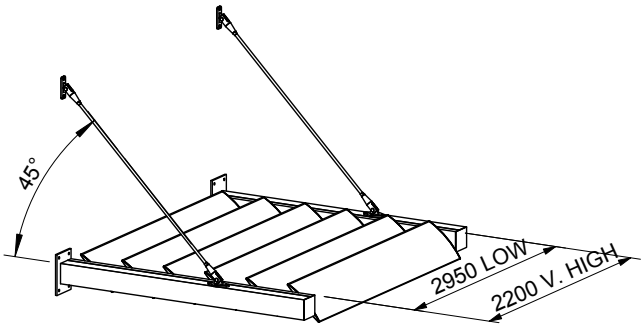


Ø20 SS STRUT SUPPORT EXAMPLE
Strut at optimum 45° angle
Spans, End Fixed 180mm Airfoil Louvre

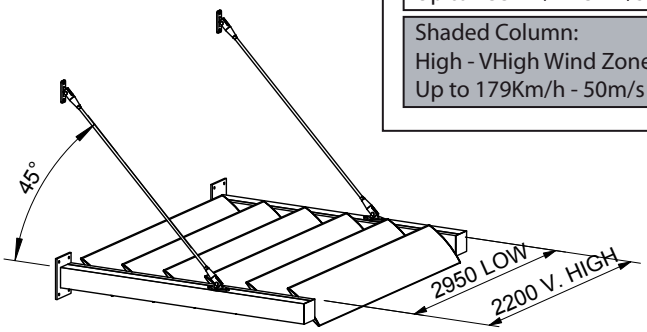


Ø42 SS STRUT SUPPORT EXAMPLE
Strut at optimum 45° angle
Spans, End Fixed 200mm Midi Louvre

## TYPICAL DETAIL : END FIXED OVERHEAD WALL STRUTS (GROUP 4 LOUVRES COLLECTION)
## 150MM HELENA BAY, 125MM WEATHERBOARD & 180MM WEATHERBOARD

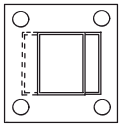

Base Plate: 100 x 150 x 6mm
Box Section: 75 x 50 x 2.5mm
Channel: 75 x 25 x 3mm

Free Span

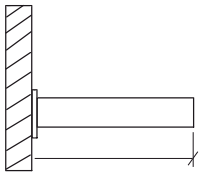

| LF | LF |
|---|---|
| 500 | 500 |

Strut Support

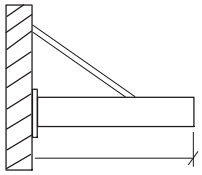

Strut Ø16mm
Stainless steel

| LS15 | LS15 |
|---|---|
| 800 | 600 |

| LS30 | LS30 |
|---|---|
| 900 | 700 |

| LS45 | LS45 |
|---|---|
| 900 | 700 |

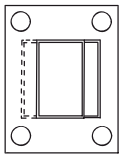

Base Plate: 100 x 225 x 6mm
Box Section: 100 x 50 x 3mm
Channel: 100 x 25 x 3mm

Free Span

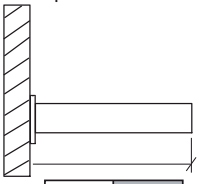

| LF | LF |
|---|---|
| 700 | 600 |

Strut Support

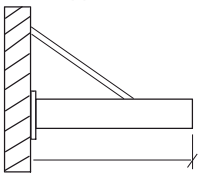

Strut Ø20mm
Stainless steel

| LS15 | LS15 |
|---|---|
| 1000 | 800 |

| LS30 | LS30 |
|---|---|
| 1200 | 1000 |

| LS45 | LS45 |
|---|---|
| 1200 | 1000 |

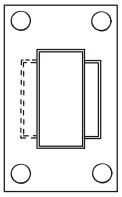

Base Plate: 100 x 275 x 6mm
Box Section: 150 x 50 x 3mm
Channel: 100 x 25 x 3mm

Free Span

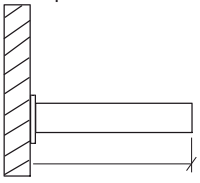

| LF | LF |
|---|---|
| 1000 | 900 |

Strut Support

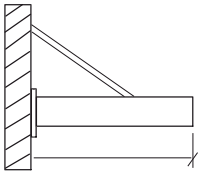

Strut Ø42mm
Stainless steel

| LS15 | LS15 |
|---|---|
| 1300 | 1100 |

| LS30 | LS30 |
|---|---|
| 1600 | 1300 |

| LS45 | LS45 |
|---|---|
| 1600 | 1400 |



FILE: SUN LOUVRES END FIXED 10.4.30 DATE MODIFIED: 01/10/2024 SCALE:
www.louvretec.co.nz www.louvretec.com.au

©Louvretec 2025 - All Rights Reserved. Technical specifications subject to change without notice.

# GROUP 5 LOUVRES

Maxi Louvres: 300mm Maxi Louvre, 600mm Maxi Louvre

## 300MM MAXI LOUVRE

Large Airfoil shaped louvre

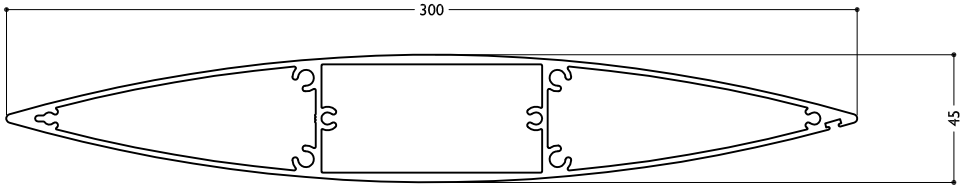


NTS

REFER TECHNICAL DETAILS PAGES 10.4.32

BLADE SPECIFICATIONS – END OR BRACKET FIXED ONLY



300MM MAXI LOUVRE

## 600MM MAXI LOUVRE

The largest Airfoil shaped louvre

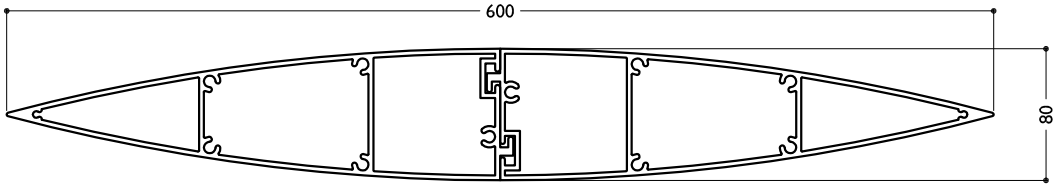


NTS

REFER TECHNICAL DETAILS PAGES 10.4.32



600MM MAXI LOUVRE

©Louvretec 2025 – All Rights Reserved. Technical specifications subject to change without notice.



## BLADE SPECIFICATIONS 300MM MAXI LOUVRE

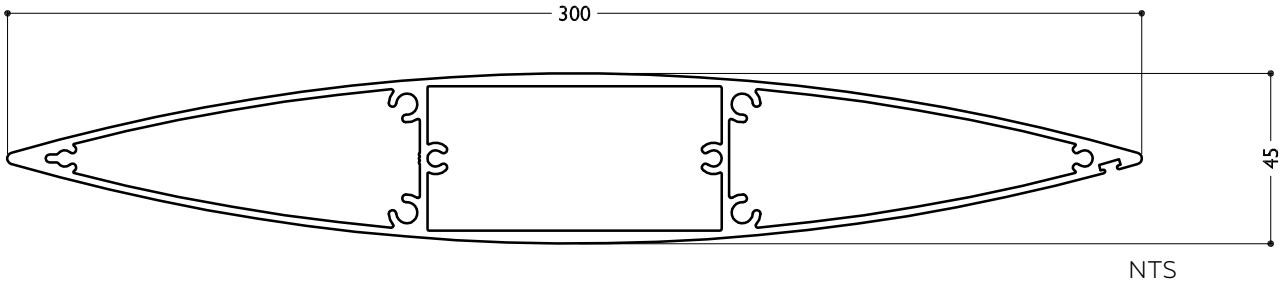


| BLADE SPECIFICATIONS | | | |
|---|---|---|---|
| Blade cover - opening system | 288 mm | Weight per linear metre - opening system | 5.66 kg/lm |
| Weight per square metre - opening system | 19.64 kg/sqm | Actual blade width | 300 mm |
| Blade centres - opening system | 288 mm | | |

### SPANS AT A GLANCE

Refer Engineering Section. Climate, terrain, shielding, location, type of structure contribute to determine spans.

| WIND ZONE | INSIDE | LOW | MEDIUM | HIGH | VERY HIGH | EXTRA HIGH |
|---|---|---|---|---|---|---|
| Factored wind speed at building | Self wt | 32 m/s<br>115 km/hr | 37m/s<br>133 km/hr | 44 m/s<br>158 km/hr | 50 m/s<br>179 km/hr | 55 m/s<br>198 km/hr |
| Adjustable & Fixed, Horizontal & Vertical | 4800 | 4800 | 4800 | 4200 | 3700 | 3350 |



## BLADE SPECIFICATIONS 600MM MAXI LOUVRE

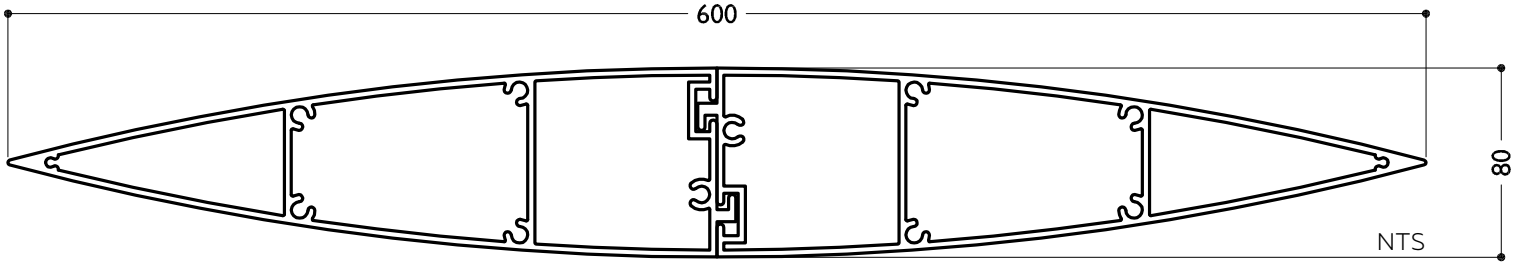


| BLADE SPECIFICATIONS | | | |
|---|---|---|---|
| Blade cover - opening system | 588 mm | Weight per linear metre - opening system | 14.74 kg/lm |
| Weight per square metre - opening system | 24.62 kg/sqm | Actual blade width | 600 mm |
| Blade centres - opening system | 588 mm | | |

### SPANS AT A GLANCE

Refer Engineering Section. Climate, terrain, shielding, location, type of structure contribute to determine spans.

| WIND ZONE | INSIDE | LOW | MEDIUM | HIGH | VERY HIGH | EXTRA HIGH |
|---|---|---|---|---|---|---|
| Factored wind speed at building | Self wt | 32 m/s<br>115 km/hr | 37m/s<br>133 km/hr | 44 m/s<br>158 km/hr | 50 m/s<br>179 km/hr | 55 m/s<br>198 km/hr |
| Fixed, Horizontal & Vertical | 5800 | 5800 | 5600 | 4700 | 4100 | 3700 |


©Louvretec 2025 – All Rights Reserved. Technical specifications subject to change without notice.

**TYPICAL DETAIL: END FIXED VERTICAL PANEL**
**300MM MAXI LOUVRE**

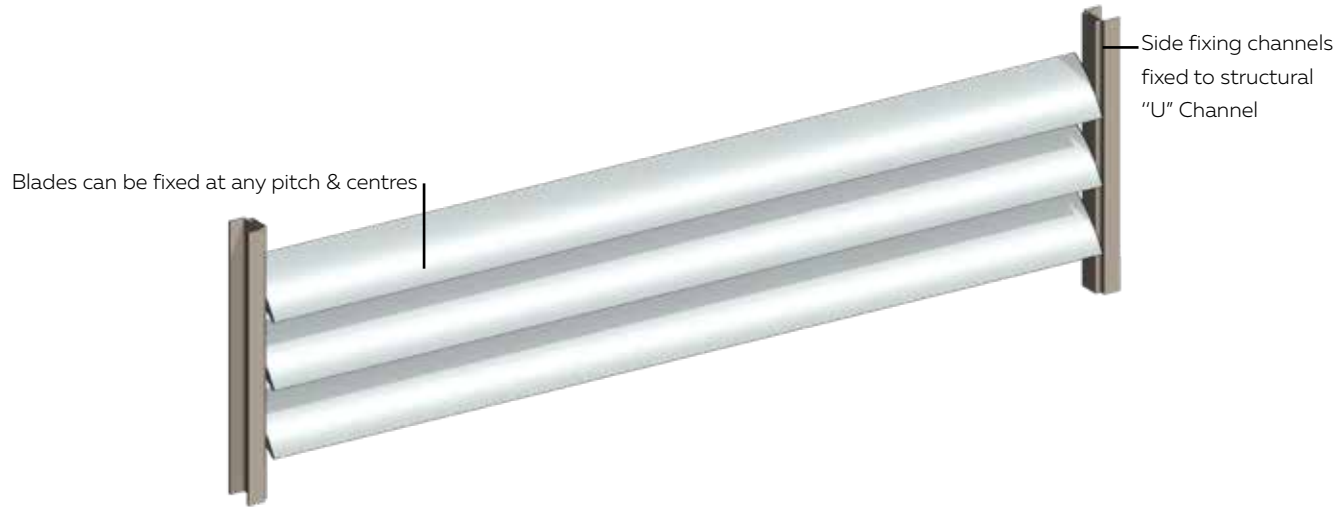


END FIXED VERTICAL PANEL - HORIZONTAL LOUVRES



**TYPICAL DETAIL: END FIXED OVERHEAD PANEL**
**300MM MAXI LOUVRE**

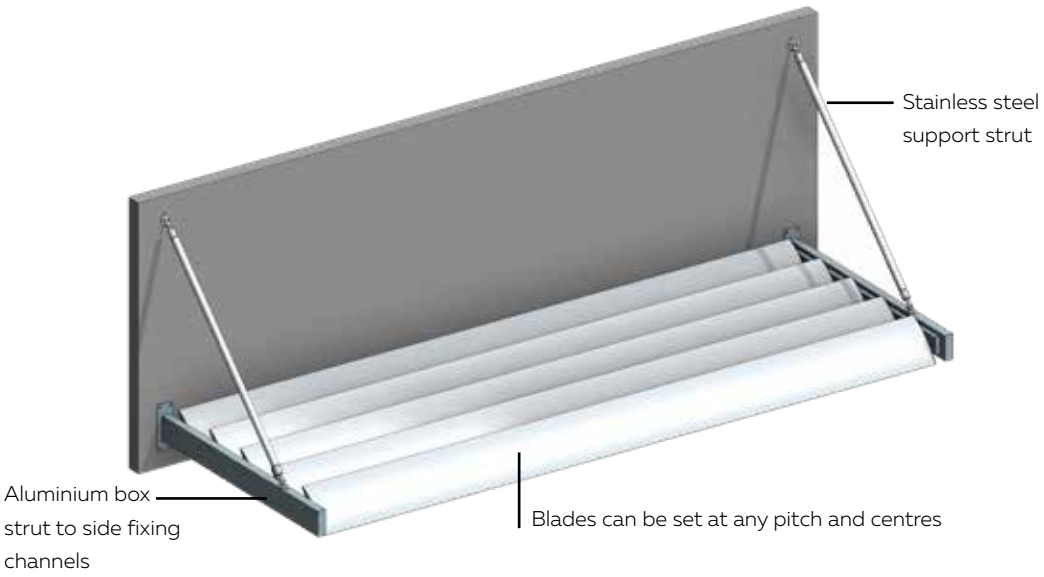


END FIXED OVERHEAD PANEL - HORIZONTAL LOUVRES

## **PLAN** END FIXED
300 MAXI LOUVRE

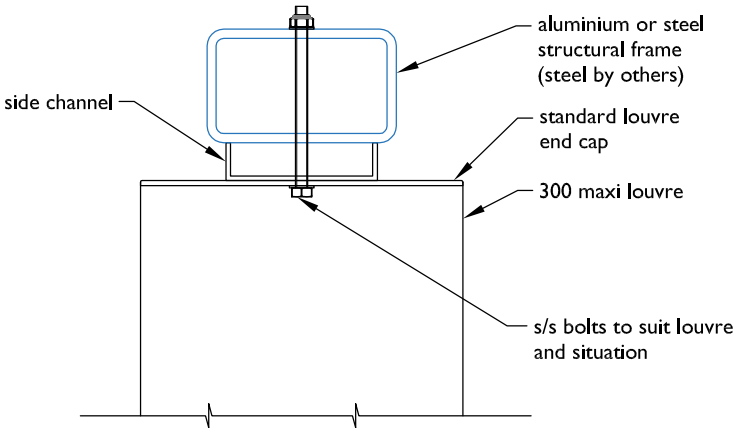


On side channel - end caps required

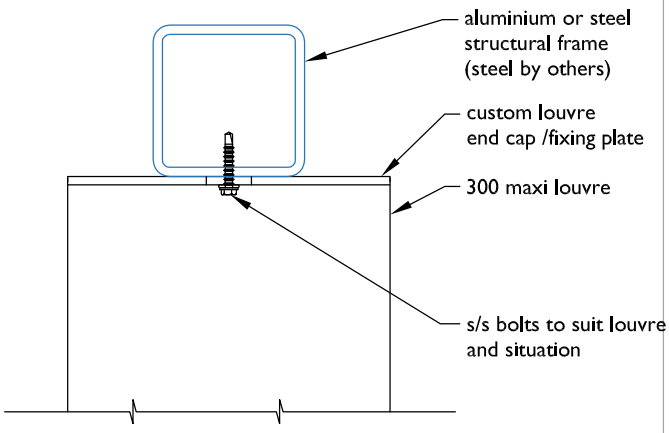


On side channel - no end caps required

## **SECTION** END FIXED
300MM MAXI LOUVRE

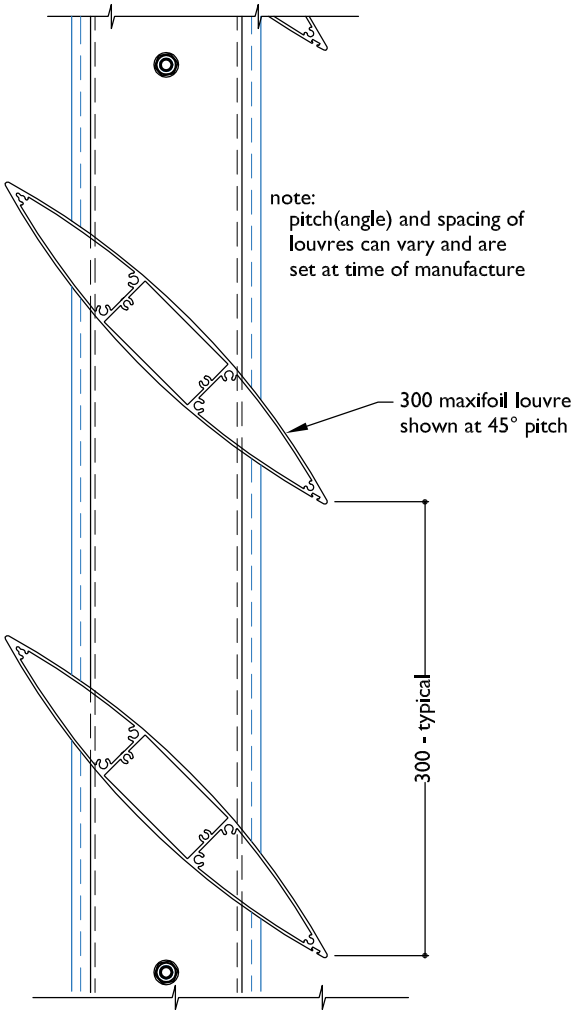


Louvres outside side channel - end caps required

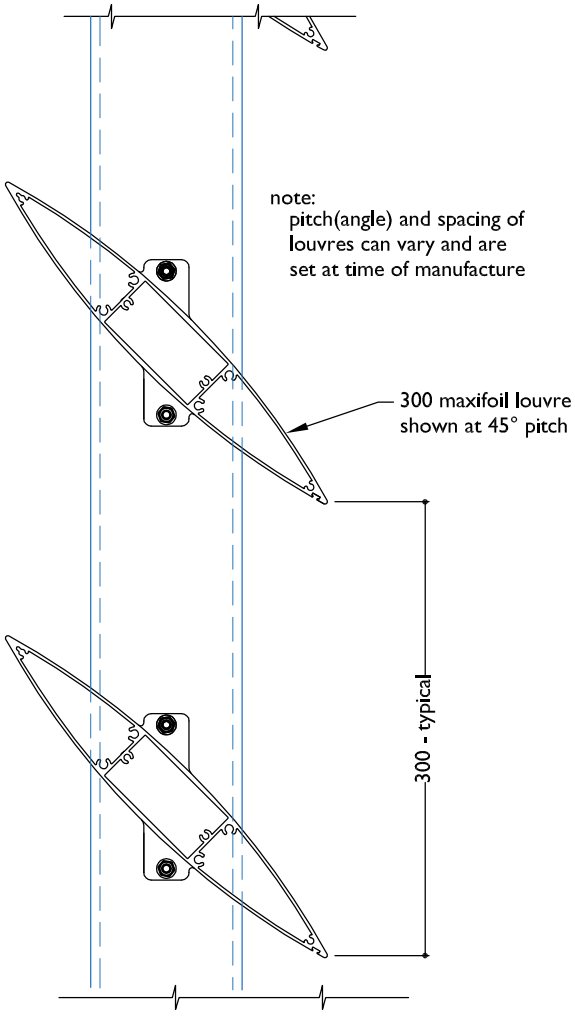


Within side channel - no end caps required


©Louvretec 2025 - All Rights Reserved. Technical specifications subject to change without notice.

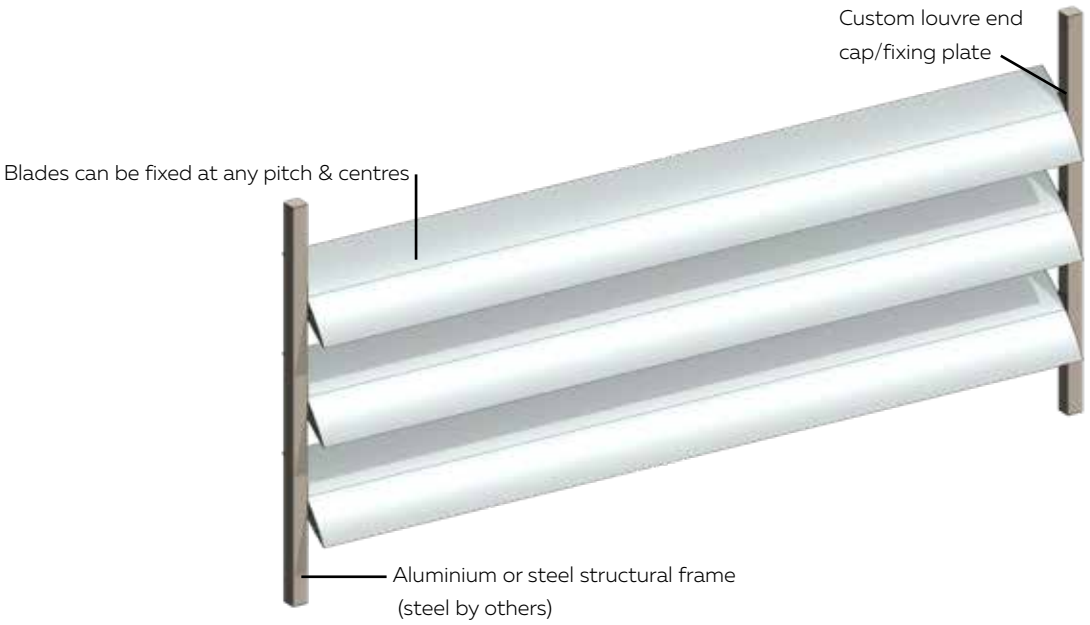


END FIXED VERTICAL PANEL - HORIZONTAL 600MM MAXI LOUVRES





END FIXED VERTICAL PANEL - VERTICAL 600MM MAXI LOUVRES

**PLAN** END FIXED
600 MAXI LOUVRE

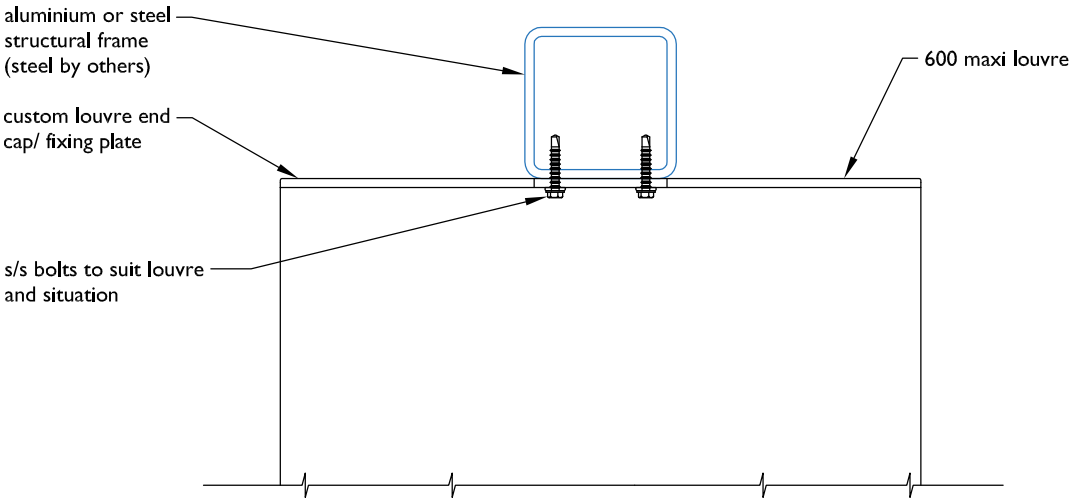


SECTION - END FIXED 600MM MAXI LOUVRE

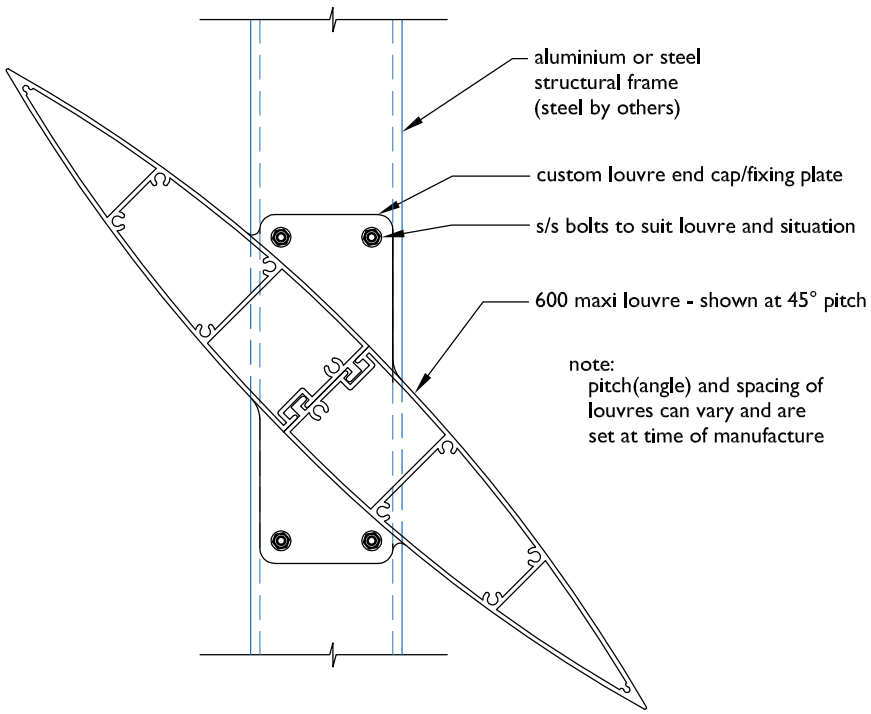



©Louvretec 2025 - All Rights Reserved. Technical specifications subject to change without notice.



OVERHEAD END FIXED 180MM LOUVRE PANEL

# GROUP 6 LOUVRES

Rectangular RL300 SQUARE, RL450 SQUARE, RL 600 SQUARE

## RL300 SQUARE LOUVRE

Rectangular in length with square corners

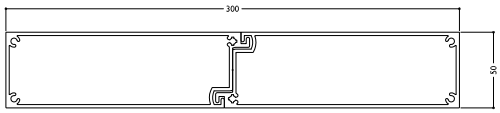


NTS

REFER TECHNICAL DETAILS
PAGES 10.4.40



END FIXED VERTICAL PANEL
- HORIZONTAL LOUVRES



RL300 SQUARE LOUVRE

## RL450 SQUARE LOUVRE

Rectangular in length with square corners

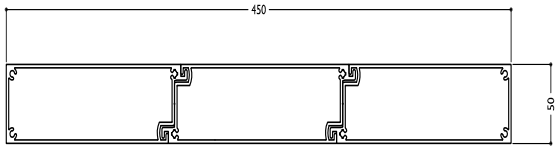


NTS

REFER TECHNICAL DETAILS
PAGES 10.4.41



END FIXED
OVERHEAD PANEL
-HORIZONTAL LOUVRES



RL450 SQUARE LOUVRE

## RL600 SQUARE LOUVRE

Rectangular in length with square corners

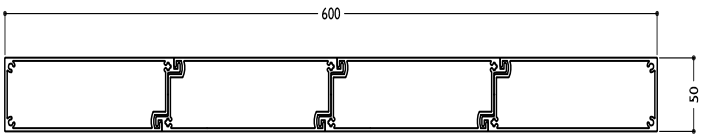


NTS

REFER TECHNICAL DETAILS
PAGES 10.4.42



END FIXED VERTICAL PANEL
- VERTICAL LOUVRES



RL600 SQUARE LOUVRE



©Louvretec 2025 – All Rights Reserved. Technical specifications subject to change without notice.

# GROUP 6 LOUVRES

Rectangular RL300 MITRE, RL450 MITRE, RL600 MITRE

## RL300 MITRE LOUVRE

Rectangular in length with mitred corners

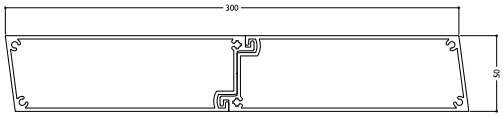


NTS

REFER TECHNICAL DETAILS
PAGES 10.4.40



END FIXED
HORIZONTAL OVERHEAD



RL300 MITRE LOUVRE

## RL450 MITRE LOUVRE

Rectangular in length with mitred corners

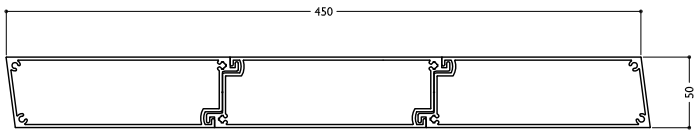


NTS

REFER TECHNICAL DETAILS
PAGES 10.4.41



END FIXED VERTICAL PANEL
– HORIZONTAL LOUVRES



RL450 MITRE LOUVRE

## RL600 MITRE LOUVRE

Rectangular in length with mitred corners

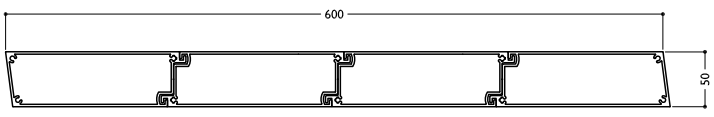


NTS

REFER TECHNICAL DETAILS
PAGES 10.4.42



END FIXED VERTICAL PANEL
–VERTICAL LOUVRES



RL600 MITRE LOUVRE

©Louvretec 2025 – All Rights Reserved. Technical specifications subject to change without notice.



## BLADE SPECIFICATIONS RL300 SQUARE & RL300 MITRE LOUVRES

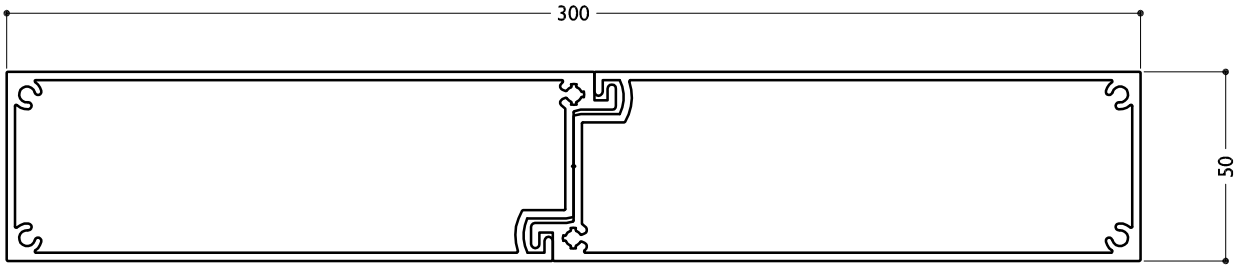


NTS

RL300 SQUARE LOUVRE

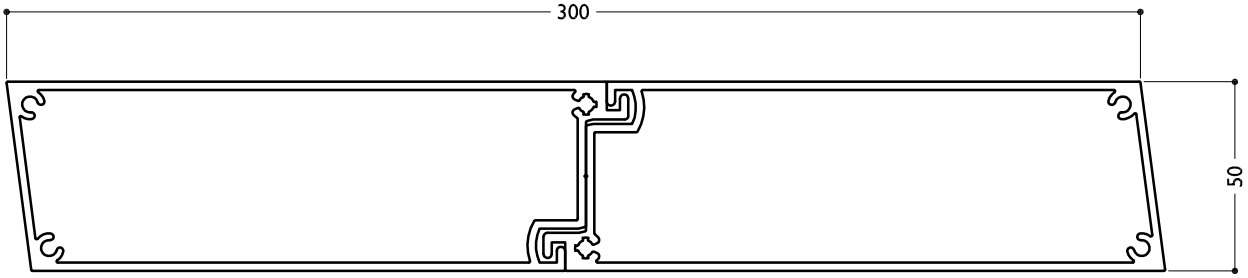


NTS

RL300 MITRE LOUVRE

| BLADE SPECIFICATIONS | | | |
|---|---|---|---|
| Blade cover - opening system | 307 mm | Weight per linear metre - opening system | 5.45 kg/lm |
| Weight per square metre - opening system | 18.5 kg/sqm | Actual blade width | 300 mm |
| Blade centres - opening system | 307 mm | | |

### SPANS AT A GLANCE

Refer Engineering Section. Climate, terrain, shielding, location, type of structure contribute to determine spans.

| WIND ZONE | INSIDE | LOW | MEDIUM | HIGH | VERY HIGH | EXTRA HIGH |
|---|---|---|---|---|---|---|
| Factored wind speed at building | Self wt | 32 m/s<br>115 km/hr | 37m/s<br>133 km/hr | 44 m/s<br>158 km/hr | 50 m/s<br>179 km/hr | 55 m/s<br>198 km/hr |
| Fixed, Horizontal & Vertical | 5800 | 5800 | 5800 | 5150 | 4500 | 4050 |

### INSTALLATION OPTIONS

END FIXED
Louvres at any pitch
Louvres at any centre

BRACKET FIXED
Louvres at any pitch
Louvres at any centre


©Louvretec 2025 – All Rights Reserved. Technical specifications subject to change without notice.



## BLADE SPECIFICATIONS RL450 SQUARE & RL450 MITRE LOUVRES

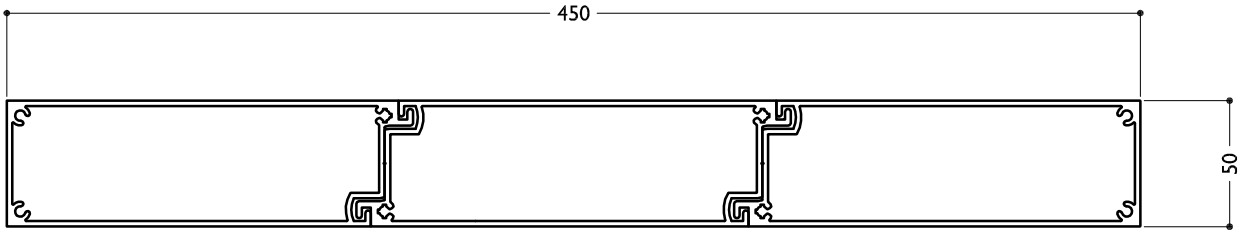


RL450 SQUARE LOUVRE

NTS

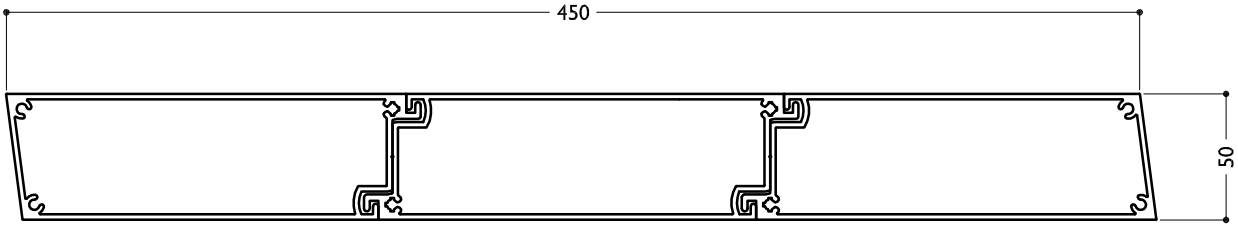


RL450 MITRE LOUVRE

NTS

| BLADE SPECIFICATIONS | | | |
|---|---|---|---|
| Blade cover - opening system | 457 mm | Weight per linear metre - opening system | 8.27 kg/lm |
| Weight per square metre - opening system | 18.5 sqm | Actual blade width | 450 mm |
| Blade centres - opening system | 457 mm | | |

### SPANS AT A GLANCE

Refer Engineering Section. Climate, terrain, shielding, location, type of structure contribute to determine spans.

| WIND ZONE | INSIDE | LOW | MEDIUM | HIGH | VERY HIGH | EXTRA HIGH |
|---|---|---|---|---|---|---|
| Factored wind speed at building | Self wt | 32 m/s<br>115 km/hr | 37m/s<br>133 km/hr | 44 m/s<br>158 km/hr | 50 m/s<br>179 km/hr | 55 m/s<br>198 km/hr |
| Fixed, Horizontal & Vertical | 5800 | 5800 | 5800 | 5150 | 4500 | 4050 |

### INSTALLATION OPTIONS

END FIXED
Louvres at any pitch
Louvres at any centre

BRACKET FIXED
Louvres at any pitch
Louvres at any centre

©Louvretec 2025 - All Rights Reserved. Technical specifications subject to change without notice.



## BLADE SPECIFICATIONS RL600 SQUARE & RL600 MITRE LOUVRES

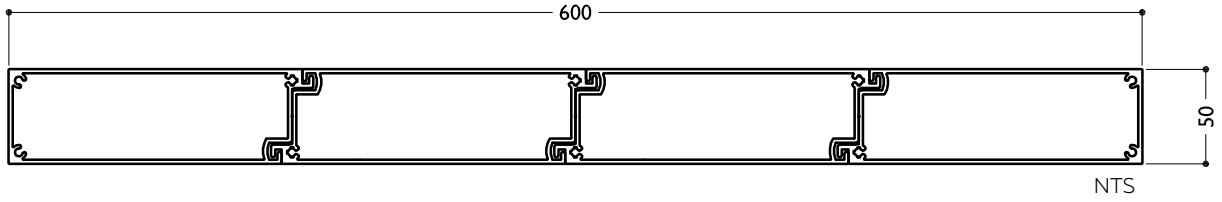


RL600 SQUARE LOUVRE

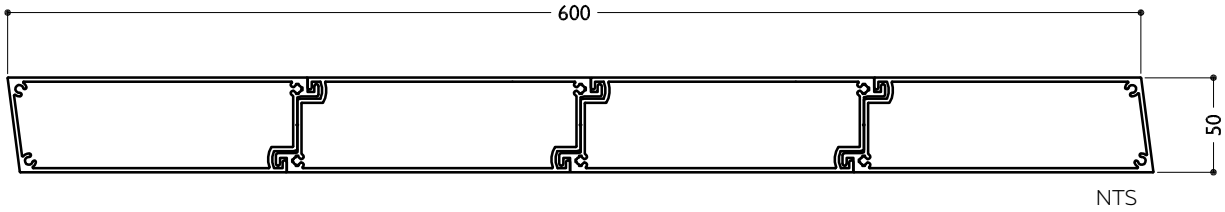


RL600 MITRE LOUVRE

| BLADE SPECIFICATIONS | | | |
|---|---|---|---|
| Blade cover - opening system | 607 mm | Weight per linear metre - opening system | 11.10 kg/lm |
| Weight per square metre - opening system | 19.0 sqm | Actual blade width | 600 mm |
| Blade centres - opening system | 607 mm | | |

### SPANS AT A GLANCE

Refer Engineering Section. Climate, terrain, shielding, location, type of structure contribute to determine spans.

| WIND ZONE | INSIDE | LOW | MEDIUM | HIGH | VERY HIGH | EXTRA HIGH |
|---|---|---|---|---|---|---|
| Factored wind speed at building | Self wt | 32 m/s 115 km/hr | 37m/s 133 km/hr | 44 m/s 158 km/hr | 50 m/s 179 km/hr | 55 m/s 198 km/hr |
| Fixed, Horizontal & Vertical | 5800 | 5800 | 5800 | 5100 | 4500 | 4050 |

### INSTALLATION OPTIONS

END FIXED
Louvres at any pitch
Louvres at any centre

BRACKET FIXED
Louvres at any pitch
Louvres at any centre


©Louvretec 2025 – All Rights Reserved. Technical specifications subject to change without notice.

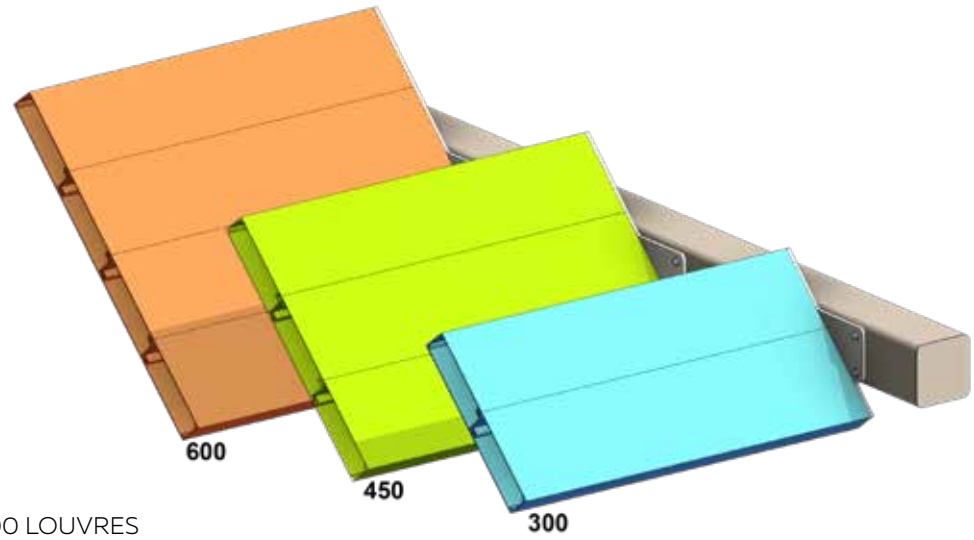


RL 300, RL 450, RL600 LOUVRES

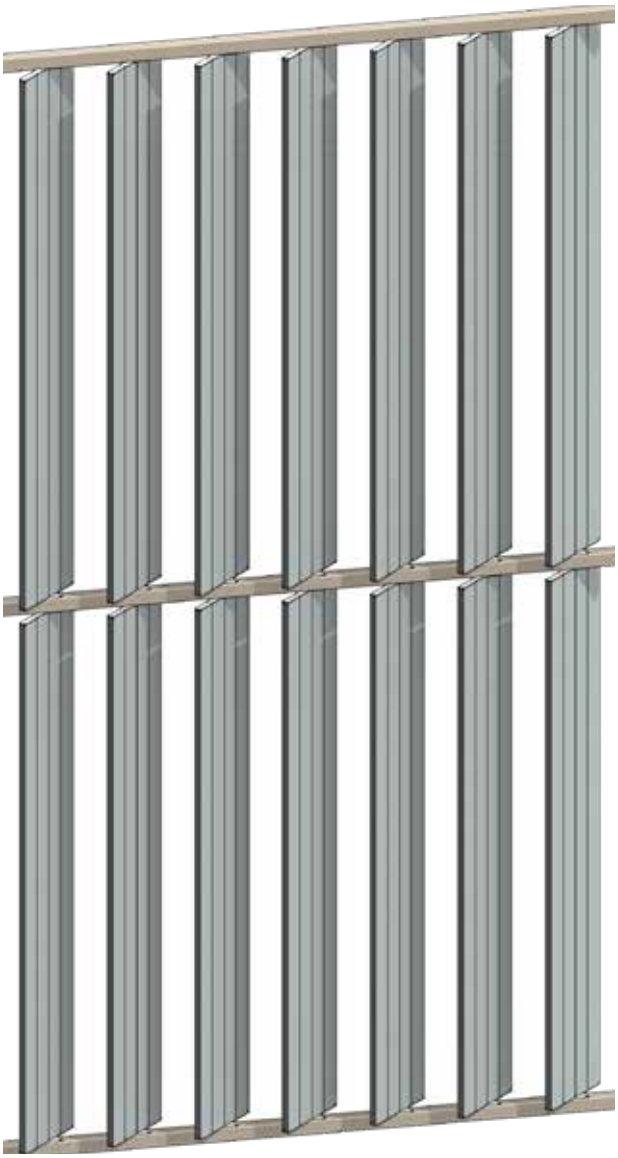

RL600 END FIXED LOUVRE PANEL



RL300 END FIXED LOUVRE PANEL, BRISBANE, QLD AU

**PLAN** END FIXED
RL300 | RL450 | RL600 SQUARE LOUVRES

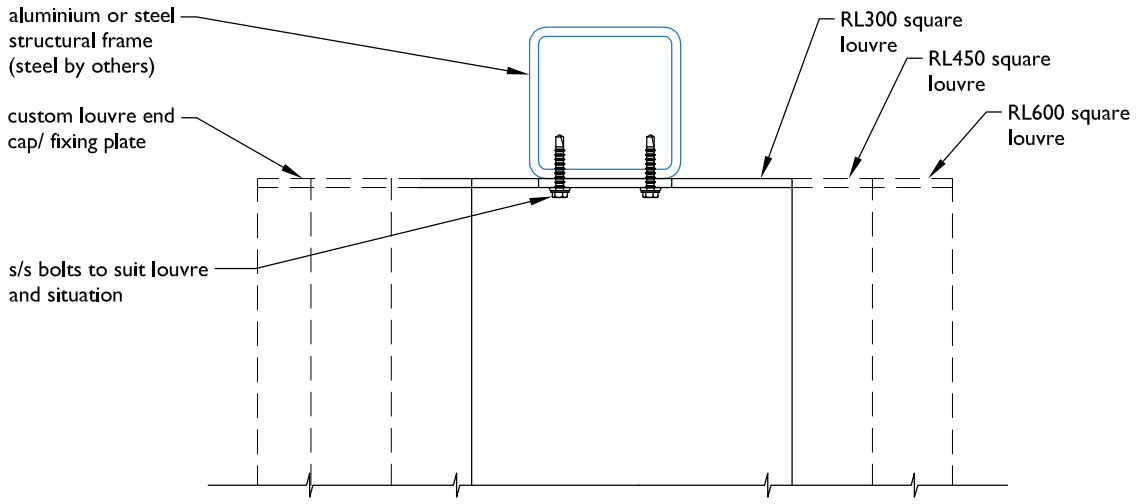


**SECTION** END FIXED
RL300 | RL450 | RL600 SQUARE LOUVRES (GROUP 6 LOUVRES COLLECTION)

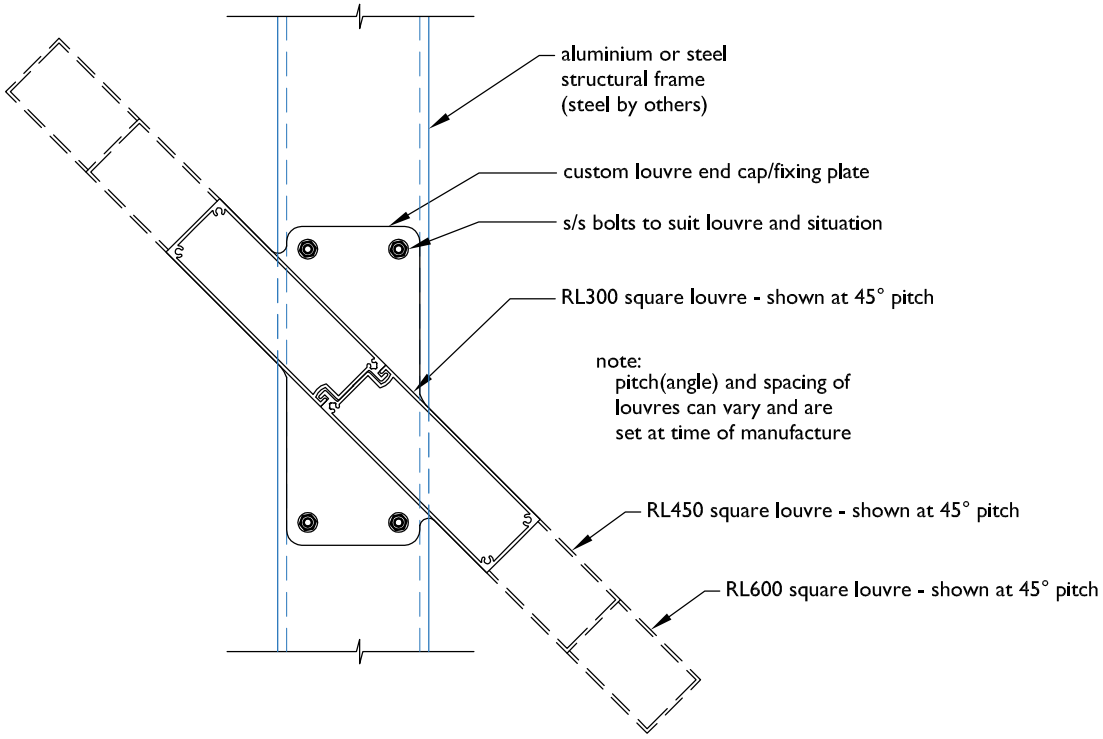



©Louvretec 2025 – All Rights Reserved. Technical specifications subject to change without notice.

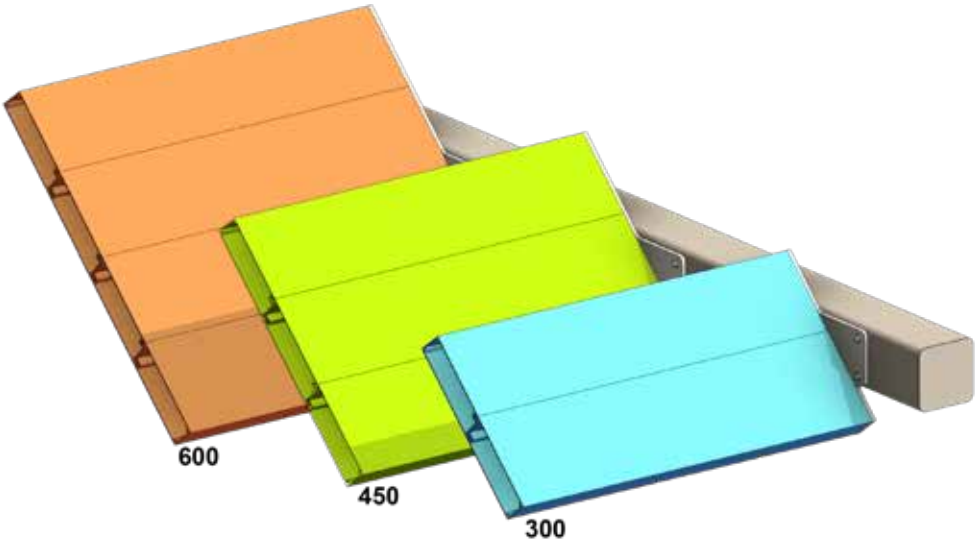
600
450
300

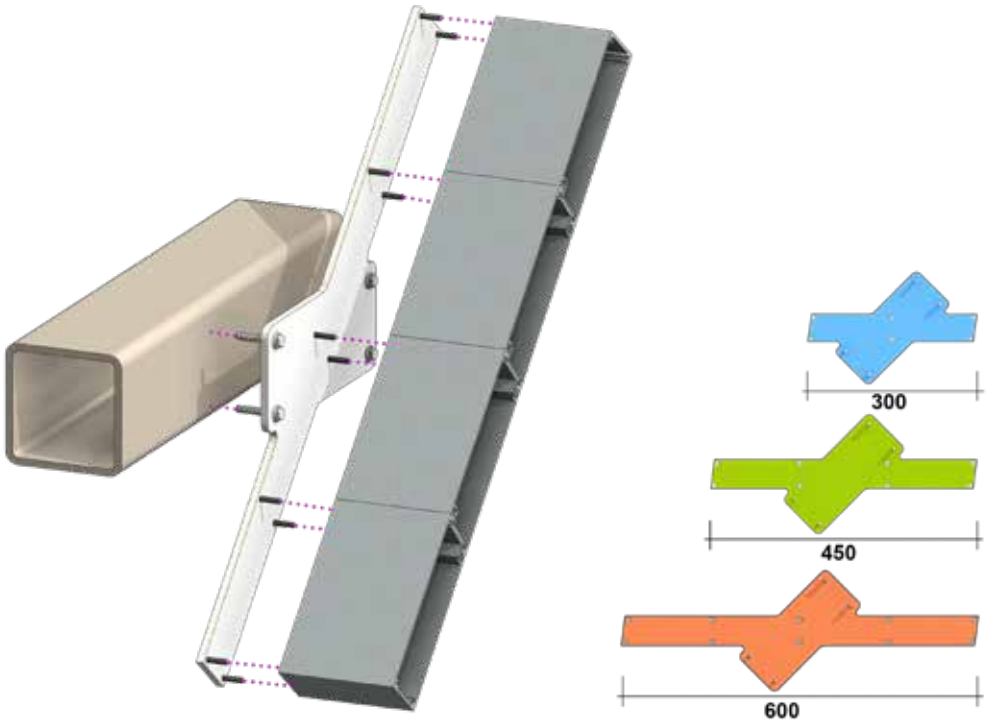
300
450
600

**PLAN** END FIXED
RL300 | RL450 | RL600 MITRE LOUVRES

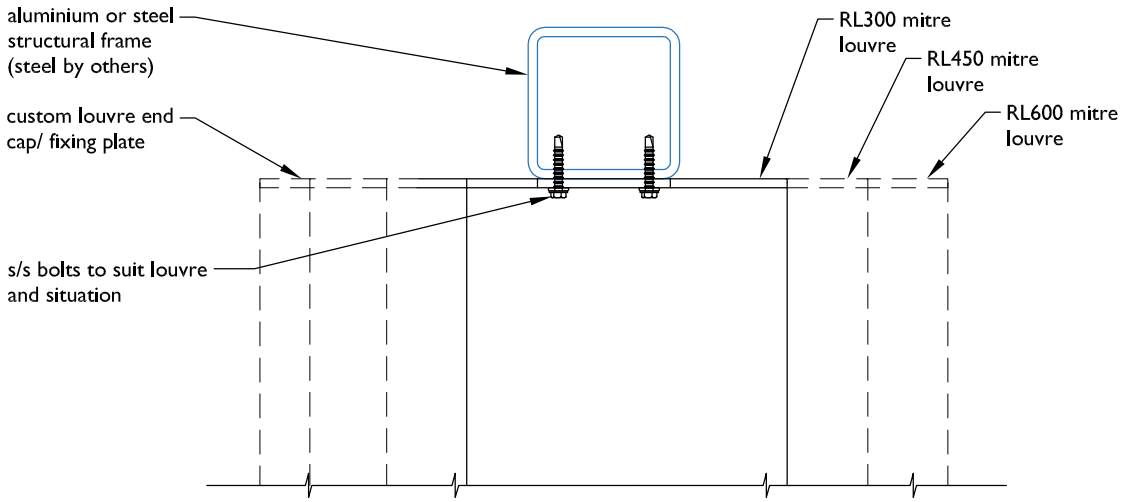


**SECTION** END FIXED
RL300 | RL450 | RL600 MITRE LOUVRES

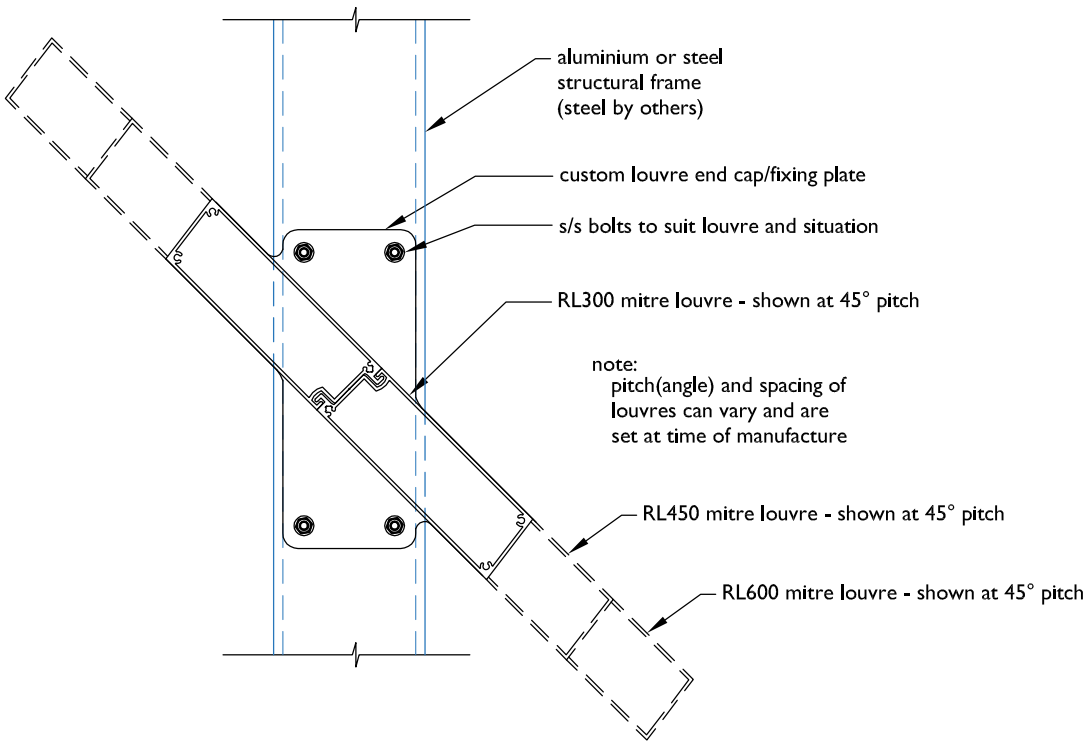



FILE: SUN LOUVRES END FIXED 10.4.46 DATE MODIFIED: 01/10/2024 SCALE:
www.louvretec.co.nz www.louvretec.com.au
©Louvretec 2025 – All Rights Reserved. Technical specifications subject to change without notice.





END FIXED CHIMNEY SURROUND, AUCKLAND

# CHIMNEY SURROUNDS

## The cherry on top

There are many options available when designing louvre chimney surrounds. The actual shape or footprint of the surround is largely dictated by the chimney itself.

Determine what size louvre blade will be best suited, both aesthetically and functionally. Wind flow through the louvre blades can assist with the actual venting of the chimney. The surround's support structure can be a combination of aluminium box section, angle or channel. Please discuss with Louvretec.



FINISHING TOUCH

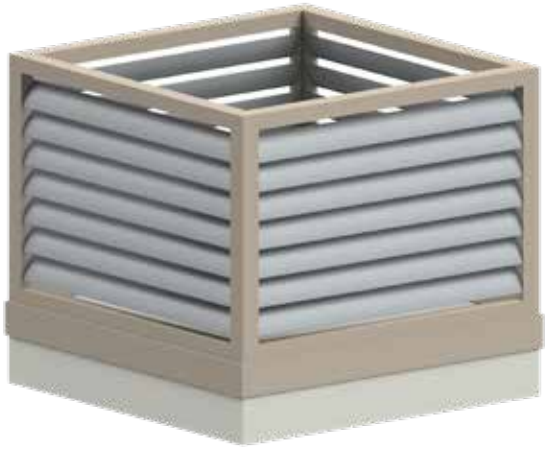

END FIXED CHIMNEY SURROUND WITH
BOX SECTION FRAME



COASTAL LIVING

SURFACE FINISHING OPTIONS
A wide range of options are available.

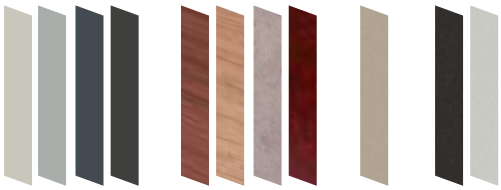

©Louvretec 2025 – All Rights Reserved. Technical specifications subject to change without notice.

## TYPICAL DETAIL: END FIXED CHIMNEY SURROUND



**SECTION**- END FIXED LOUVRE CHIMNEY SURROUND

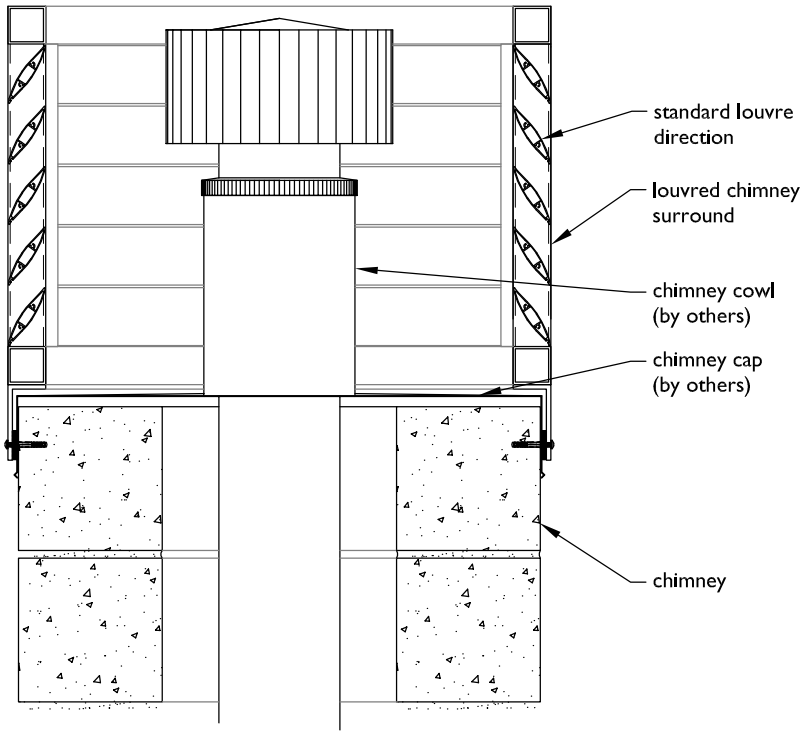


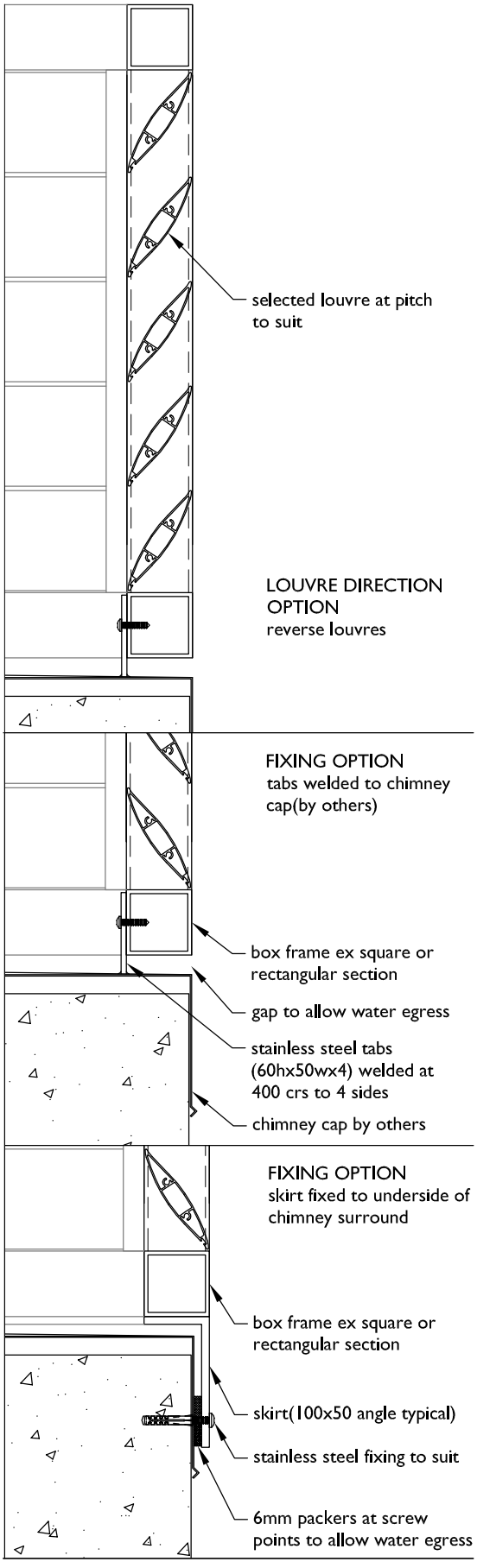




FILE: SUN LOUVRES END FIXED 10.4.48 DATE MODIFIED: 01/10/2024 SCALE:

www.louvretec.co.nz www.louvretec.com.au

©Louvretec 2025 – All Rights Reserved. Technical specifications subject to change without notice.



sun louvres
By Louvretec

## BRACKET FIXED SUN LOUVRES


| | |
|---|---|
| Gallery and Overview | 10.5.02 - 10.5.03 |
| Bracket Fixed Vertical Louvre Infills | 10.5.04 |
| Bracket Fixed Overhead Louvre Panels | 10.5.05 |
| Corner Mitres | 10.5.06 |
| Support Brackets | 10.5.07 - 10.5.08 |
| Louvre range overview | 10.5.10 - 10.5.11 |
| Group 1 Louvres: 90mm Midi | 10.5.12 - 10.5.16 |
| Group 2 Louvres: 120mm, 180mm Airfoils & 150mm Midi Louvre | 10.5.17 - 10.5.22 |
| Group 3 Louvres: 200mm Maxi Louvre | 10.5.23 - 10.5.25 |
| Group 4 Louvres: 300mm Maxi Louvre | 10.5.26 - 10.5.28 |
| Group 5 Louvres: 125, 180mm Weatherboard & 150mm Helena Bay Louvre | 10.5.29 - 10.5.32 |
| Group 6 Louvres: 600mm Maxi Louvre | 10.5.33 - 10.5.34 |
| Group 7 Louvres: RL300, RL450,RL600 Square & Mitred Louvres | 10.5.35 - 10.5.40 |
| Bracket Fixed Chimney Surrounds | 10.5.41 - 10.5.42 |


©Louvretec 2025 – All Rights Reserved. Technical specifications subject to change without notice.

# SUN LOUVRES BRACKET FIXED **GALLERY**


1.


2.


3.

1. BRACKET FIXED 120MM AIRFOIL LOUVRES 2. BRACKET FIXED RL300 MITRE LOUVRES 3. BRACKET FIXED 150MM MIDI LOUVRES



©Louvretec 2025 – All Rights Reserved. Technical specifications subject to change without notice.

# BRACKET FIXED SUN LOUVRES

## Fix blades Vertically or Horizontally

All Louvretec Sun Louvres can be Bracket Fixed using Louvretec's proprietary Bracket Fixing Systems. Die cast or extruded brackets are custom manufactured site specific, enabling the louvre blades to be set at any pitch or to any centres.



VERTICAL PANEL BRACKET FIXED - HORIZONTAL LOUVRES

### VERTICAL PANELS BRACKET FIXED - HORIZONTAL LOUVRES

All Louvretec Airfoil and Maxi Louvres can be Bracket Fixed, with the blades:
- set at any angle
- set at any centre (blade centre)

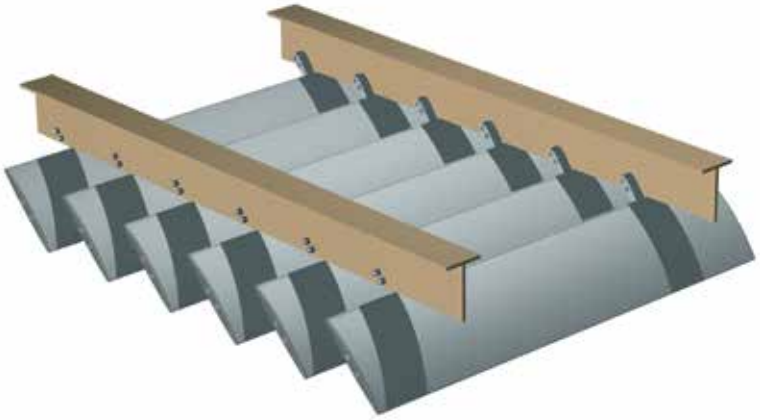

OVERHEAD PANEL BRACKET FIXED - HORIZONTAL LOUVRES

### OVERHEAD PANELS BRACKET FIXED - HORIZONTAL LOUVRES

Overhead (Horizontal) louvres may fit above an existing opening, or as illustrated may require a specific structural sub frame.

Sub frames are typically aluminium or steel and usually require specific engineering details.

Louvretec specialises in the supply and installation of aluminium structural sub frames.
Please contact Louvretec for further details.

©Louvretec 2025 - All Rights Reserved. Technical specifications subject to change without notice.

# HOW THE VERTICAL SYSTEM WORKS

## Bracket fixing

- Blades can be set to any pitch or centre
- Three typical options shown below;

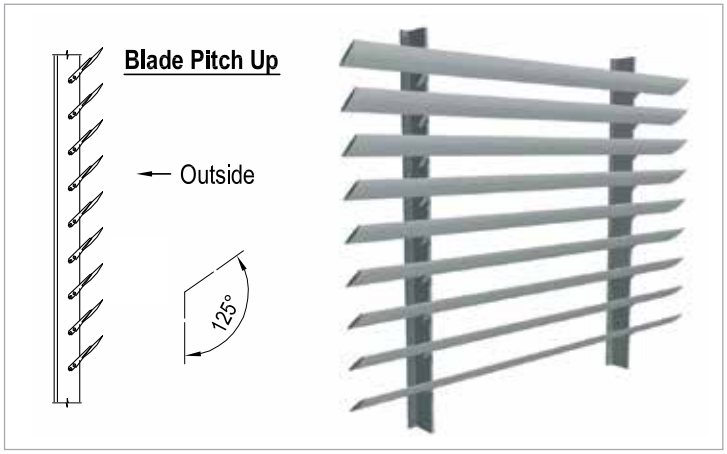


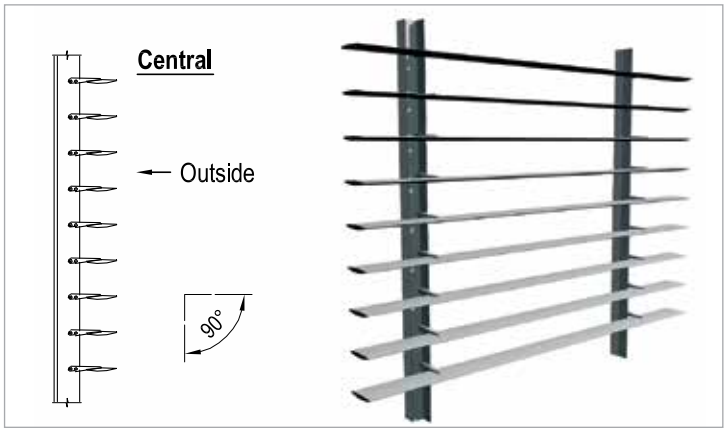


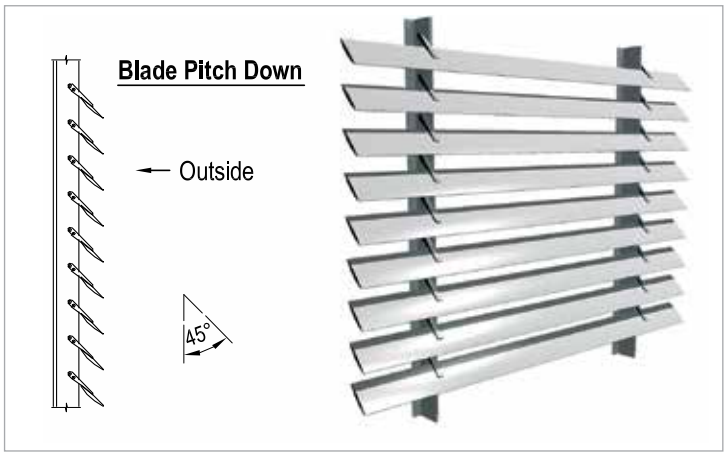


- All Louvretec Airfoil and Maxi Louvres can be bracket fixed with the blades:
  - set at any angle or pitch (blade pitch)
  - set at any centre (blade centre)
- There are four combinations of louvre blade to extruded bracket arm (tear drop) to consider:

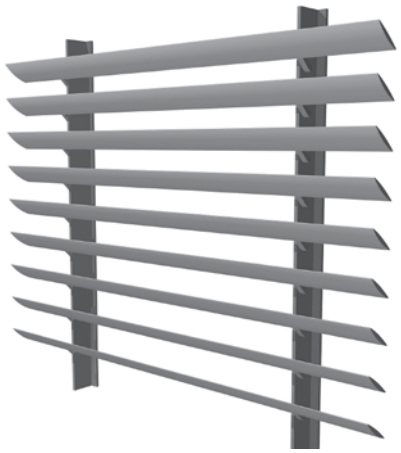

1. Blade pitch down tear drop over

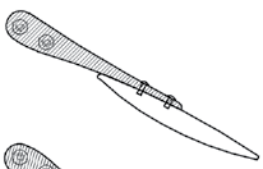

2. Blade pitch down tear drop under

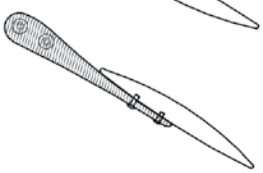

3. Blade pitch up tear drop over

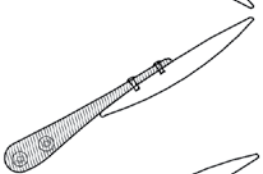

4. Blade pitch up tear drop under



©Louvretec 2025 – All Rights Reserved. Technical specifications subject to change without notice.

# HOW THE OVERHEAD SYSTEM WORKS

## Overhead panels

BLADE PITCH DOWN TEAR DROP UNDER




SHOWING 200MM AIRFOIL

BLADE PITCH DOWN TEAR DROP UNDER




SHOWING 120MM AIRFOIL

BLADE PITCH DOWN TEAR DROP UNDER

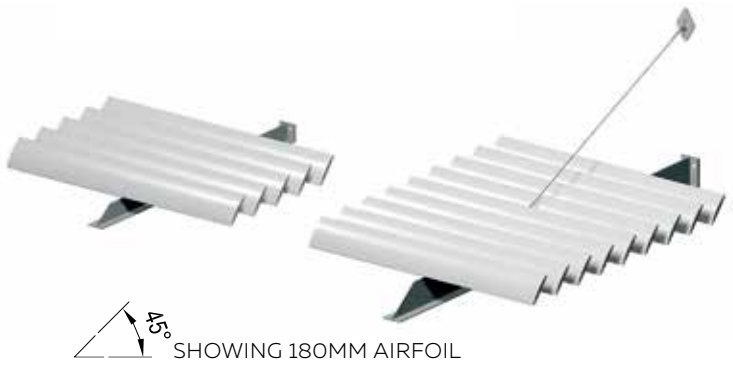


SHOWING 180MM AIRFOIL

- Horizontal or Overhead louvres may fit above an existing opening or, as illustrated, may require a separate structural sub-frame.
- Sub-frames are typically aluminium or steel and usually require specific engineering details.
- Engineering is usually also required for the fixing details to the building.
- Louvretec specialises in the supply and installation of aluminium structural sub-frames.

©Louvretec 2025 – All Rights Reserved. Technical specifications subject to change without notice.

# HOW THE CORNER MITRES WORK

## Bracket fixing

- Bracket fixed louvres mitred at the corners are a Louvretec specialty.
- A seamless effect is achieved giving the blades continuity to both sides of the building.
- Both Vertical and Horizontal Bracket Fixed louvres can be mitred.



VERTICAL WALL OF BRACKET FIXED - HORIZONTAL LOUVRES WITH CORNER MITRES



CANTILEVERED ENDS

AN ALTERNATIVE TO CORNER MITRES IS TO SQUARE CUT AND CANTILEVER THE BLADES AT THE CORNERS



OVERHEAD (HORIZONTAL) BRACKET FIXED LOUVRES WITH CORNER MITRES



©Louvretec 2025 – All Rights Reserved. Technical specifications subject to change without notice.

## TYPICAL SUPPORT BRACKETS

GROUP 1 AIRFOIL

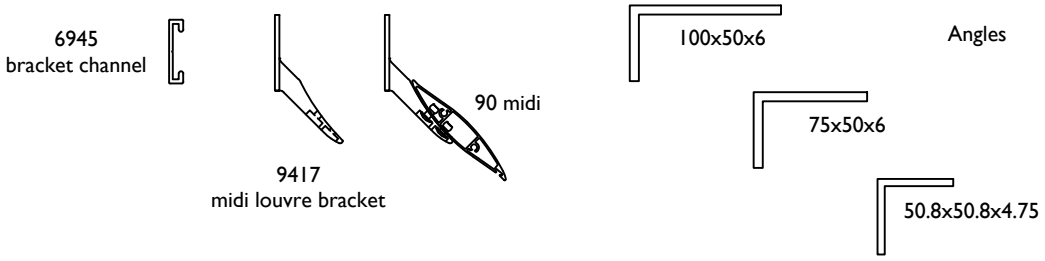


GROUP 2 AIRFOILS

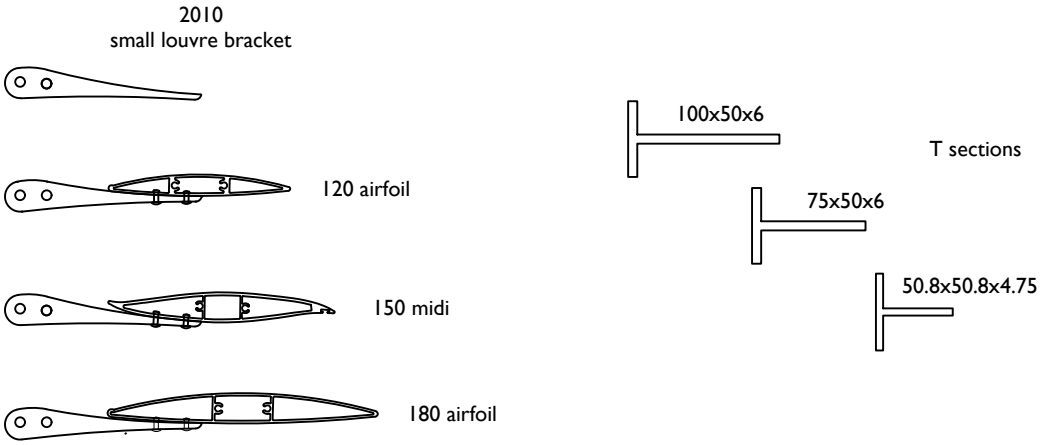


GROUP 3 AIRFOIL

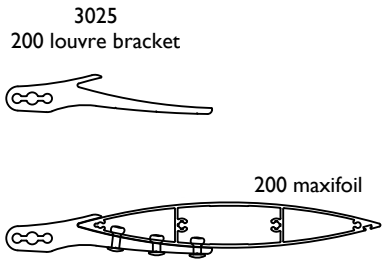


GROUP 4 AIRFOIL

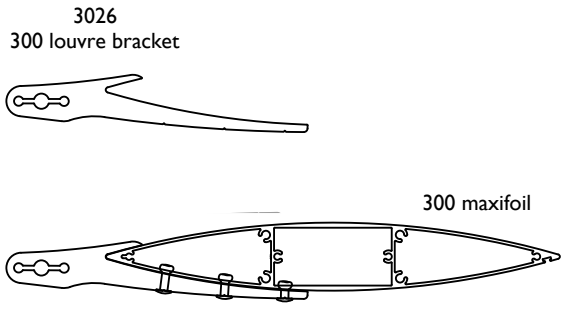


GROUP 5 RECTANGULAR

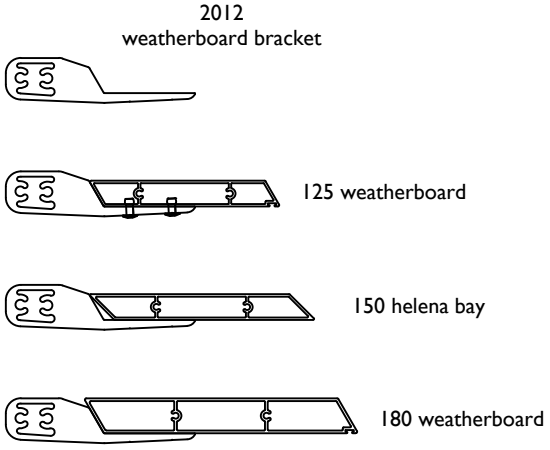



©Louvretec 2025 – All Rights Reserved. Technical specifications subject to change without notice.

## TYPICAL SUPPORT BRACKETS

GROUP 6
MAXI AIRFOIL LOUVRES

3610
600 Maxi Louvre Cast Bracket

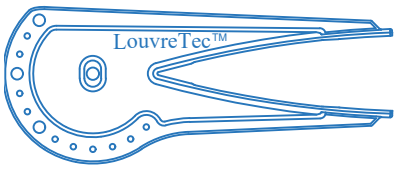


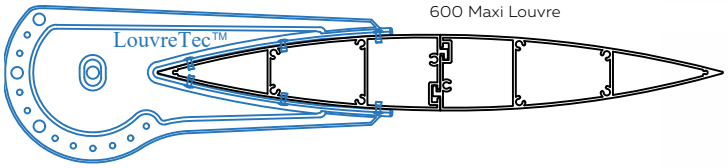


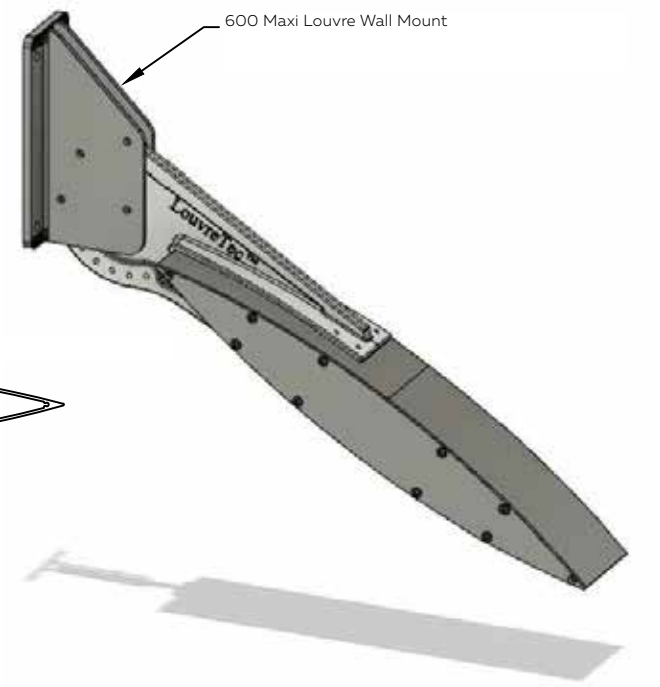


GROUP 7
MAXI RECTANGULAR LOUVRES

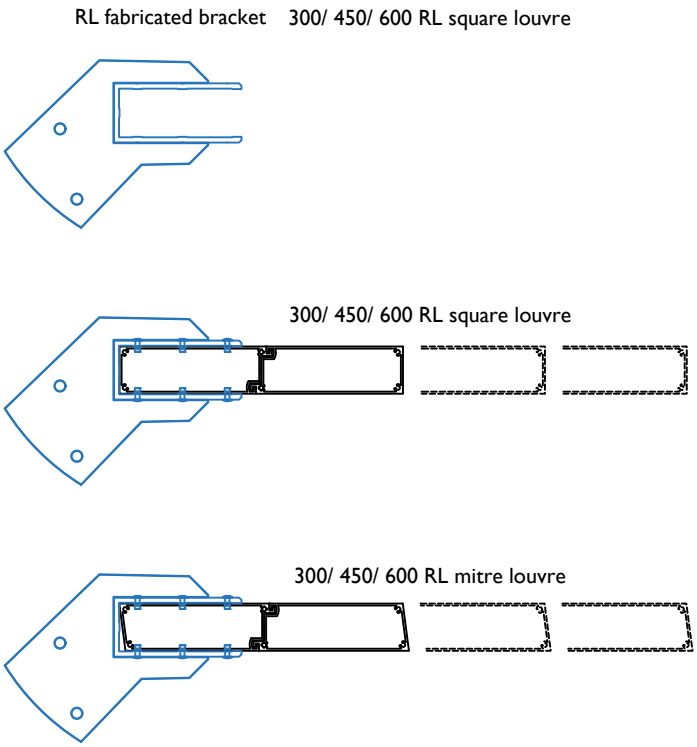


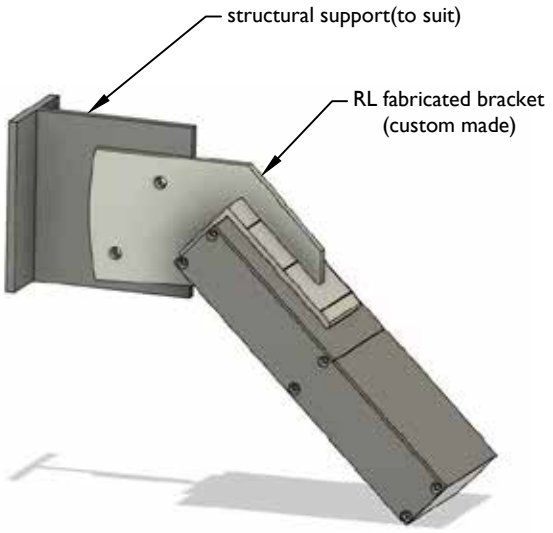


300 RL square shown



FILE: SUN LOUVRES BRACKET FIXED 10.5.08 DATE MODIFIED: 01/10/2024 SCALE:
www.louvretec.co.nz www.louvretec.com.au

©Louvretec 2025 – All Rights Reserved. Technical specifications subject to change without notice.



MINIMUM - MAXIMUM BLADE SPANS AT A GLANCE AS DETERMINED BY WIND SPEED. REFER TO SECTION ENGINEERING REPORTS FOR FULL DETAILS ON BLADE SPANS.

EXTRA HIGH WIND SPEED 198KM/H 55M/S

LOW WIND SPEED 115KM/H 32M/S

# THE LOUVRETEC RANGE OF BRACKET FIXED SUN LOUVRES

## 7 Groups of Sun Louvres that can be Bracket Fixed using Louvretec's proprietary Bracket Fixing system

IF A LOUVRE YOU WISH TO SPECIFY IS NOT SHOWN IN THIS SECTION PLEASE CONTACT YOUR DEALER. WE'RE FOCUSED TO MEETING YOUR NEEDS WITH TAILORED SOLUTIONS.

| ***GROUP*** | ***LOUVRE*** | ***MAXIMUM SPANS*** |
|---|---|---|
| BRACKET FIXED GROUP 1 |  90 MIDI LOUVRE | 1400MM EX HIGH<br>2000MM LOW |
| |  150 MIDI LOUVRE | 1900MM EX HIGH<br>2750MM LOW |
| BRACKET FIXED GROUP 2 |  120 AIRFOIL LOUVRE | 1600MM EX HIGH<br>2300MM LOW |
| |  180 AIRFOIL LOUVRE | 2050MM EX HIGH<br>2950MM LOW |
| BRACKET FIXED GROUP 3 |  200 MAXI LOUVRE | 2350MM EX HIGH<br>3700MM LOW |
| BRACKET FIXED GROUP 4 |  300 MAXI LOUVRE | 3350MM EX HIGH<br>4800MM LOW |



©Louvretec 2025 – All Rights Reserved. Technical specifications subject to change without notice.

## APPLICATION OVERVIEW GROUPED BRACKET FIXED LOUVRES AT A GLANCE

MINIMUM - MAXIMUM BLADE SPANS AT A GLANCE AS DETERMINED BY WIND SPEED. REFER TO SECTION ENGINEERING REPORTS FOR FULL DETAILS ON BLADE SPANS.

EXTRA HIGH WIND SPEED 198KM/H 55M/S — EX HIGH

LOW WIND SPEED 115KM/H 32M/S — LOW

# THE LOUVRETEC RANGE OF BRACKET FIXED SUN LOUVRES

7 Groups of Sun Louvres that can be Bracket Fixed using Louvretec's proprietary Bracket Fixing system

IF A LOUVRE YOU WISH TO SPECIFY IS NOT SHOWN IN THIS SECTION PLEASE CONTACT YOUR DEALER. WE'RE FOCUSED TO MEETING YOUR NEEDS WITH TAILORED SOLUTIONS.

| GROUP | LOUVRE | MAXIMUM SPANS |
|---|---|---|
| BRACKET FIXED GROUP 5 |  150MM HELENA BAY | 2050MM EX HIGH<br>3050MM LOW |
| |  125MM WEATHERBOARD PANEL | 1750MM EX HIGH<br>2500MM LOW |
| |  180MM WEATHERBOARD PANEL | 2100MM EX HIGH<br>3050MM LOW |
| END FIXED GROUP 6 |  600 MAXI LOUVRE | 3700MM EX HIGH<br>5800MM LOW |
| END FIXED GROUP 7 |  RL300 MITRE LOUVRE | 4050MM EX HIGH<br>5800MM LOW |
| |  RL450 MITRE LOUVRE | 4050MM EX HIGH<br>5800MM LOW |
| |  RL600 MITRE LOUVRE | 4050MM EX HIGH<br>5800MM LOW |
| |  RL300 SQUARE LOUVRE | 4050MM EX HIGH<br>5800MM LOW |
| |  RL450 SQUARE LOUVRE | 4050MM EX HIGH<br>5800MM LOW |
| |  RL600 SQUARE LOUVRE | 4050MM EX HIGH<br>5800MM LOW |

©Louvretec 2025 - All Rights Reserved. Technical specifications subject to change without notice.

# GROUP 1 LOUVRE

Small to Medium size louvres: 90MM MIDI & 150mm MIDI LOUVRES

## 90MM MIDI LOUVRE

The smallest

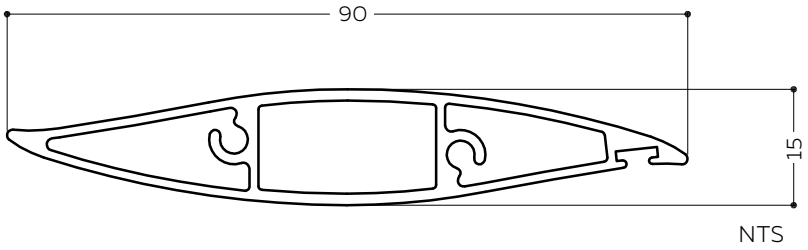


REFER TECHNICAL DETAILS PAGES 10.1.06

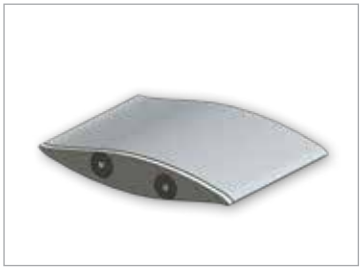

90MM MIDI LOUVRE

## 150MM MIDI LOUVRE

Wave shaped

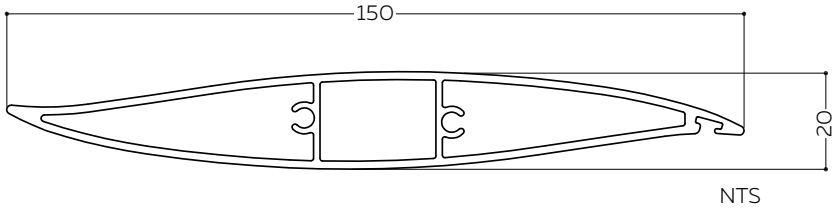


REFER TECHNICAL DETAILS PAGES 10.2.23

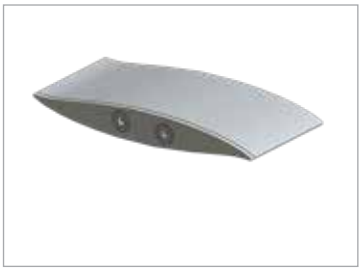

150MM MIDI LOUVRE



©Louvretec 2025 – All Rights Reserved. Technical specifications subject to change without notice.

**TYPICAL DETAIL 90MM BRACKET FIXED LOUVRE - VERTICAL & OVERHEAD**
(GROUP 1 LOUVRE COLLECTION)



BRACKET FIXED VERTICAL PANEL -
90MM MIDI HORIZONTAL LOUVRES



BRACKET FIXED OVERHEAD PANEL -
90MM MIDI HORIZONTAL LOUVRES

**TYPICAL DETAIL 150MM MIDI BRACKET FIXED LOUVRE - VERTICAL & OVERHEAD PANEL**



BRACKET FIXED VERTICAL PANEL -
150MM MIDI HORIZONTAL LOUVRES

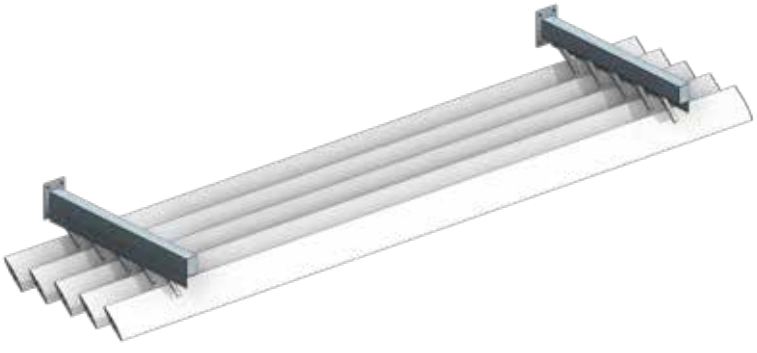

BRACKET FIXED OVERHEAD PANEL -
150MM MIDI HORIZONTAL LOUVRES

©Louvretec 2025 - All Rights Reserved. Technical specifications subject to change without notice.

**TYPICAL DETAIL: BRACKET FIXED 90MM MIDI LOUVRE**
(GROUP 1 LOUVRES COLLECTION)

PLAN - BRACKET FIXED 90MM MIDI LOUVRE

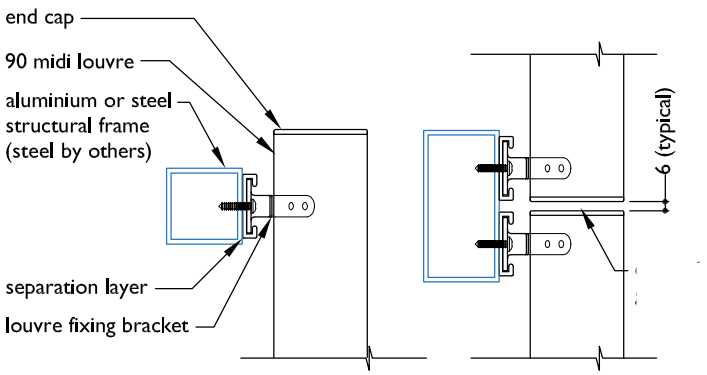


CANTILEVERED END

EXPANSION JOINT

SECTION - BRACKET FIXED 90MM MIDI LOUVRE

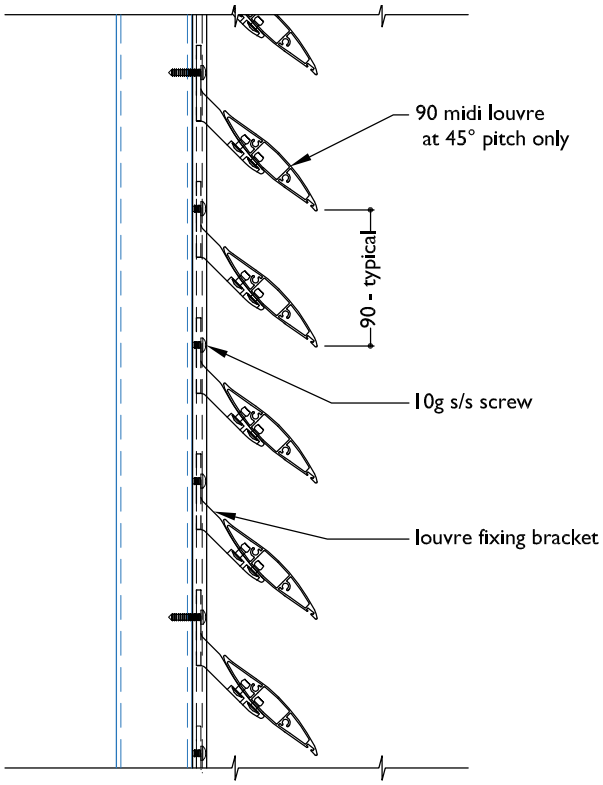


BRACKET FIXED 90MM MIDI LOUVRE



FILE: SUN LOUVRES BRACKET FIXED 10.5.14 DATE MODIFIED: 01/10/2024 SCALE:

www.louvretec.co.nz www.louvretec.com.au

©Louvretec 2025 - All Rights Reserved. Technical specifications subject to change without notice.

## PLAN - BRACKET FIXED 150MM MIDI LOUVRE

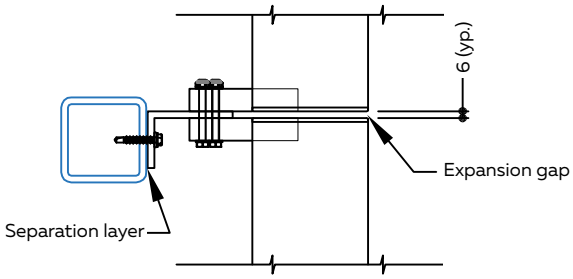


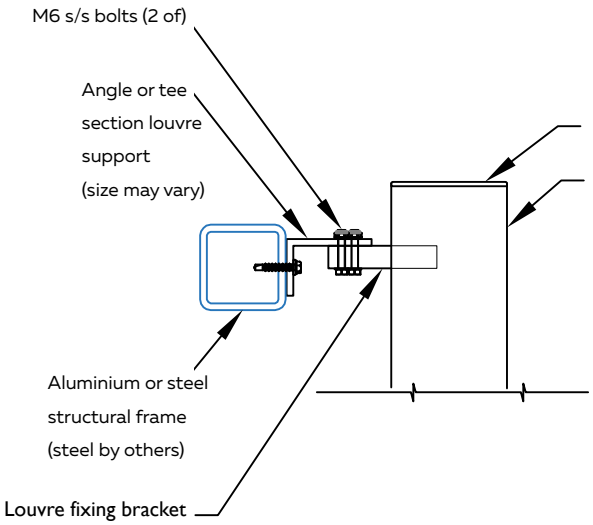


## SECTION - BRACKET FIXED 150MM MIDI LOUVRE

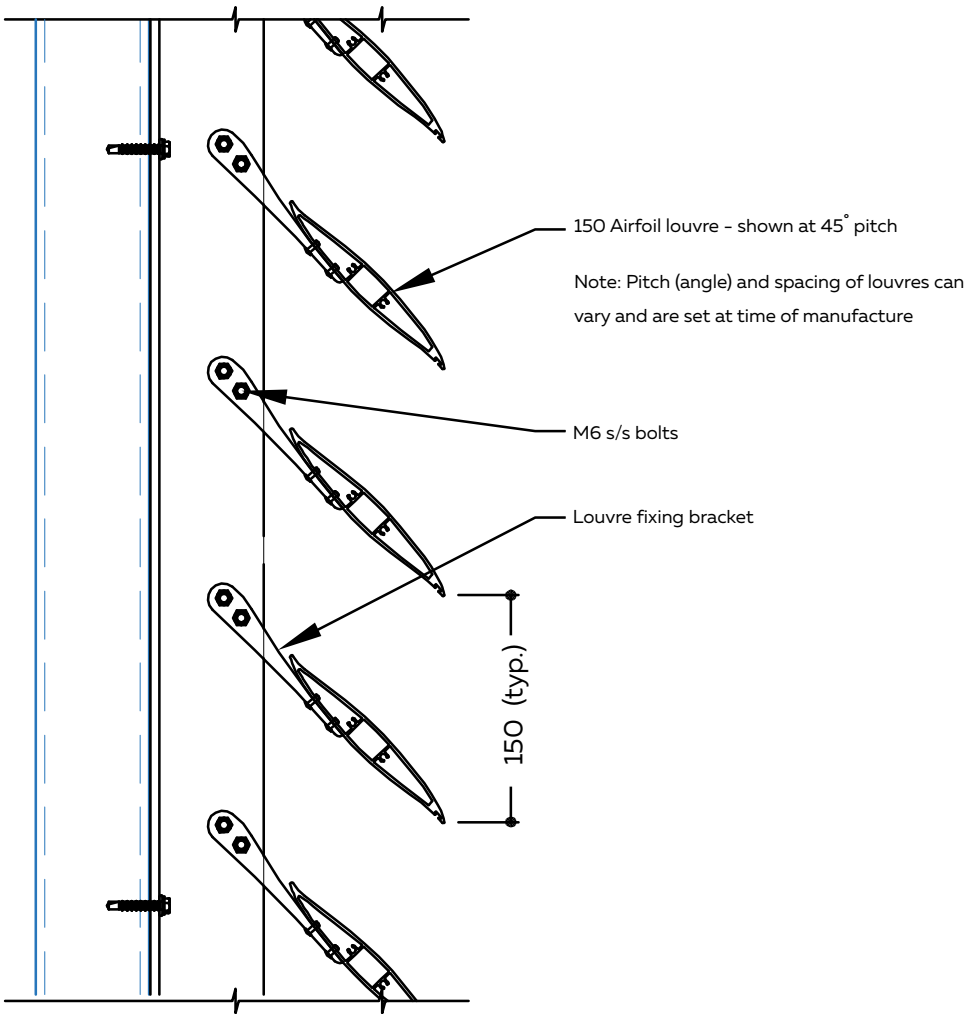



©Louvretec 2025 – All Rights Reserved. Technical specifications subject to change without notice.

## TYPICAL DETAIL : BRACKET FIXED 90MM MIDI LOUVRE
(GROUP 1 LOUVRES COLLECTION)

PLAN

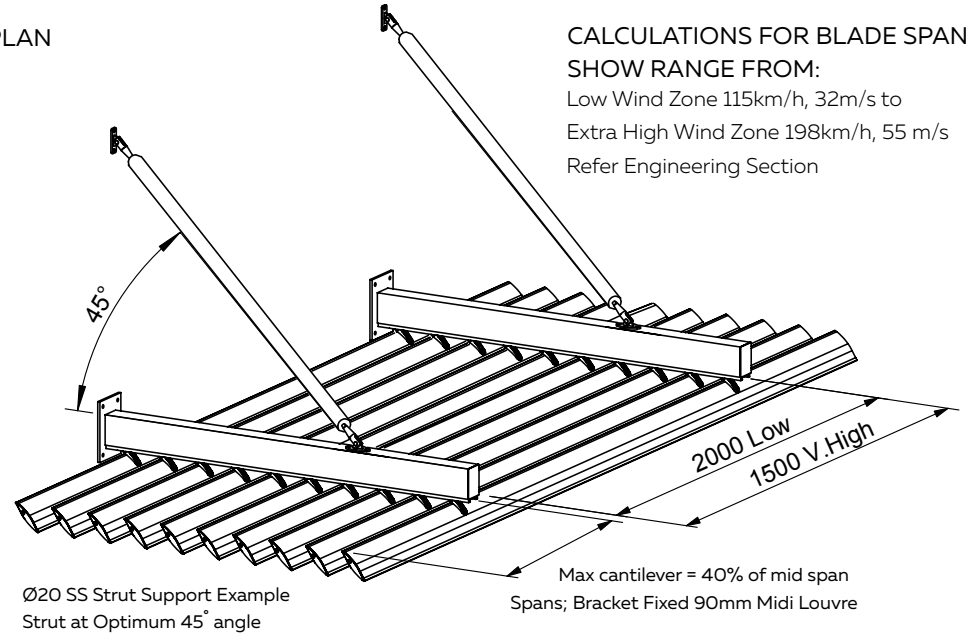


Ø20 SS Strut Support Example
Strut at Optimum 45° angle

CALCULATIONS FOR BLADE SPANS SHOW RANGE FROM:
Low Wind Zone 115km/h, 32m/s to
Extra High Wind Zone 198km/h, 55 m/s
Refer Engineering Section

KEY
LF = Free span
LS15 = Strut @ 15°
LS30 = Strut @ 30°
LS45 = Strut @ 45°

Plain Column:
Low - Med Wind Zone.
Up to 133Km/h - 37m/s

Shaded Column:
High - VHigh Wind Zone.
Up to 179Km/h - 50m/s

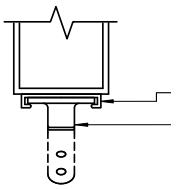

42mm "C"Channel,
Die cast bracket
system at 45° centres
to suit

## TYPICAL DETAIL - BRACKET FIXED 150MM MIDI LOUVRE
(GROUP 1 LOUVRES COLLECTION)

KEY
LF = Free span
LS15 = Strut @ 15°
LS30 = Strut @ 30°
LS45 = Strut @ 45°

Plain Column:
Low - Med Wind Zone.
Up to 133Km/h - 37m/s

Shaded Column:
High - VHigh Wind Zone.
Up to 179Km/h - 50m/s

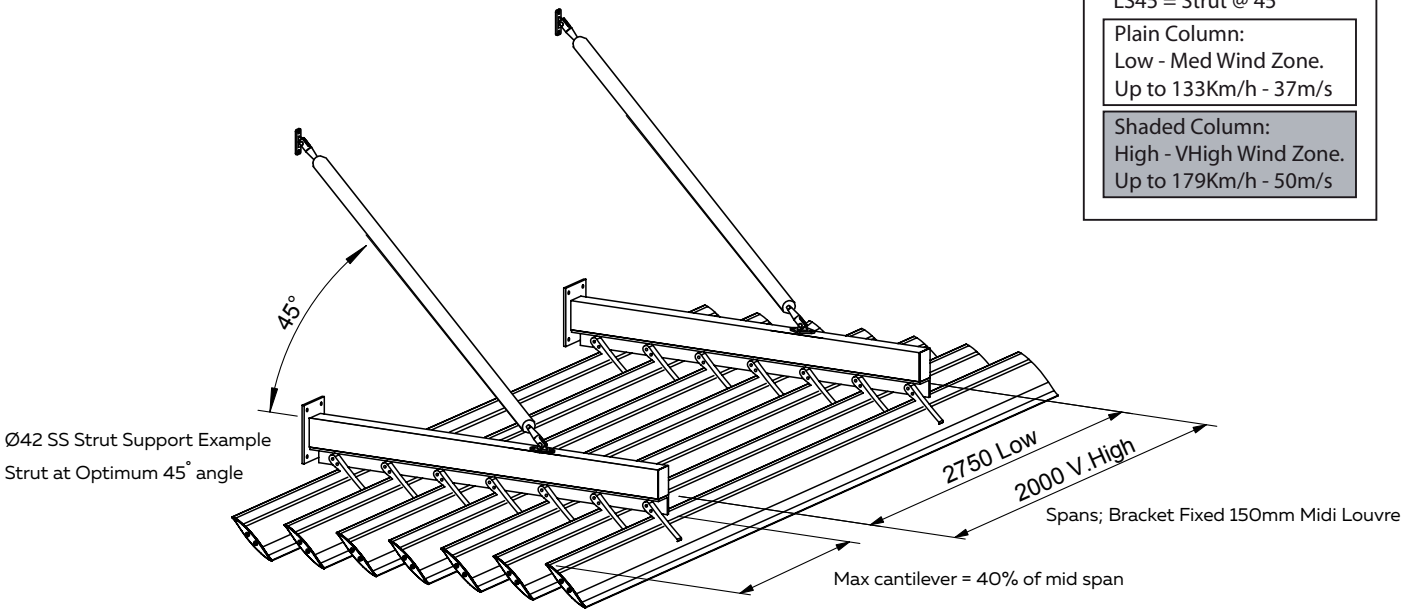


Ø42 SS Strut Support Example
Strut at Optimum 45° angle



FILE: SUN LOUVRES BRACKET FIXED 10.5.16
DATE MODIFIED: 01/10/2024 SCALE:
www.louvretec.co.nz www.louvretec.com.au

©Louvretec 2025 - All Rights Reserved. Technical specifications subject to change without notice.

## 120MM AIRFOIL LOUVRE

Versatile range of design applications

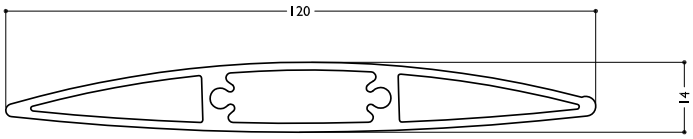


NTS

REFER TECHNICAL DETAILS PAGES 10.2.18



120MM AIRFOIL LOUVRE

## 180MM AIRFOIL LOUVRE

The largest Airfoil shaped louvre

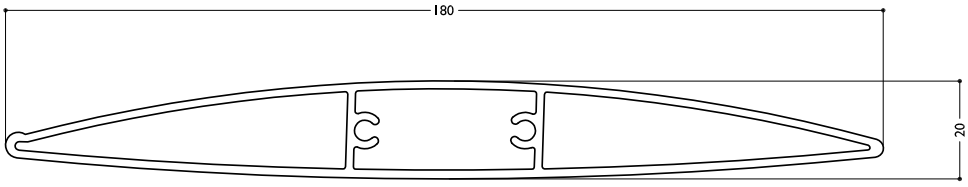


NTS

REFER TECHNICAL DETAILS PAGES 10.2.20



180MM AIRFOIL LOUVRE

©Louvretec 2025 – All Rights Reserved. Technical specifications subject to change without notice.

## TYPICAL DETAIL 120MM AIRFOIL BRACKET FIXED - VERTICAL PANEL

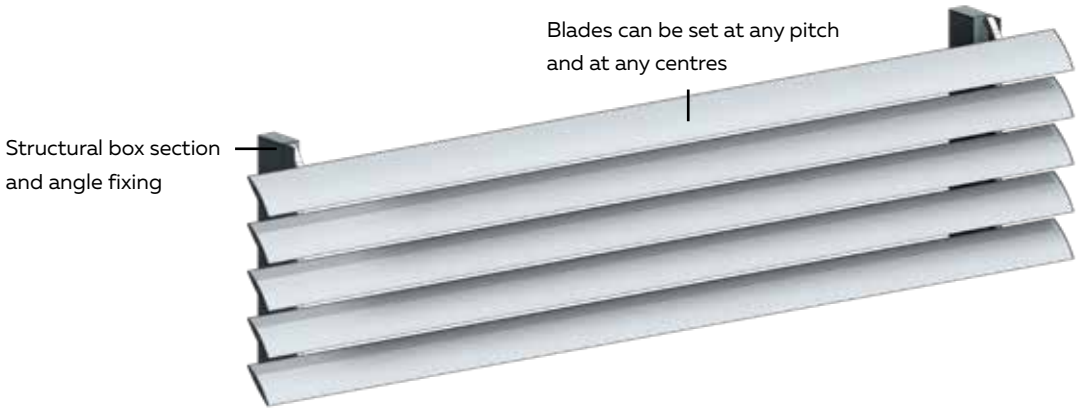


BRACKET FIXED VERTICAL PANEL - 120MM AIRFOIL HORIZONTAL LOUVRES

## TYPICAL DETAIL 120MM AIRFOIL BRACKET FIXED LOUVRE - OVERHEAD PANEL

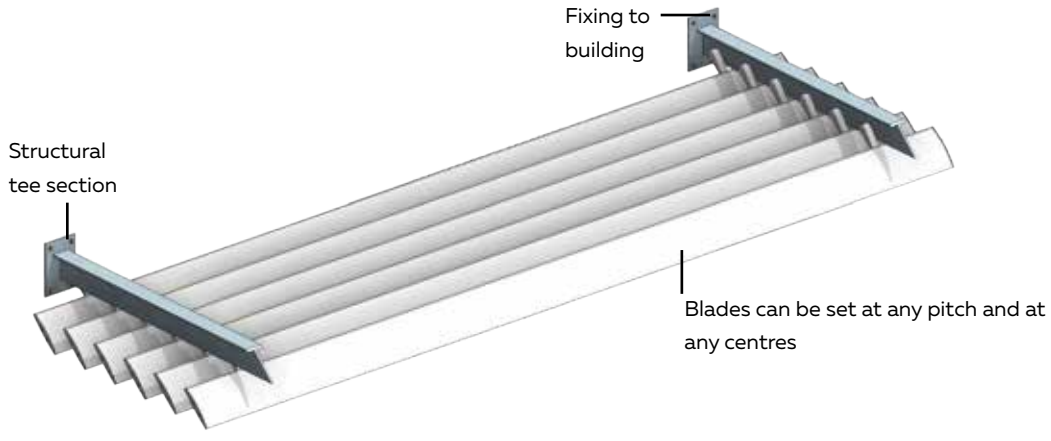


BRACKET FIXED OVERHEAD PANEL - 120MM AIRFOIL HORIZONTAL LOUVRES


©Louvretec 2025 – All Rights Reserved. Technical specifications subject to change without notice.

## PLAN - BRACKET FIXED 120MM AIRFOIL LOUVRE

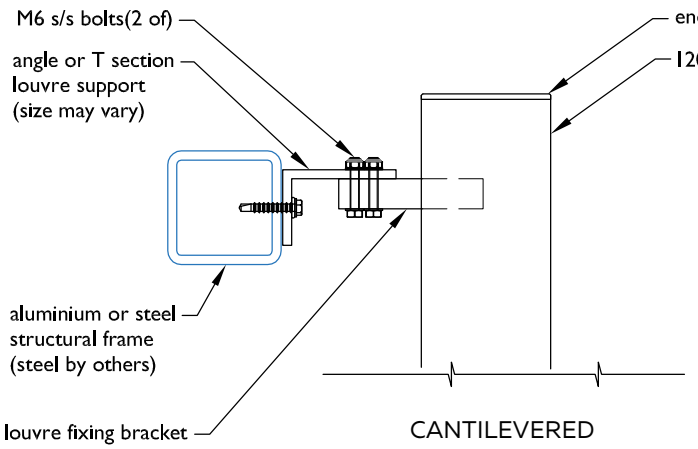


CANTILEVERED END

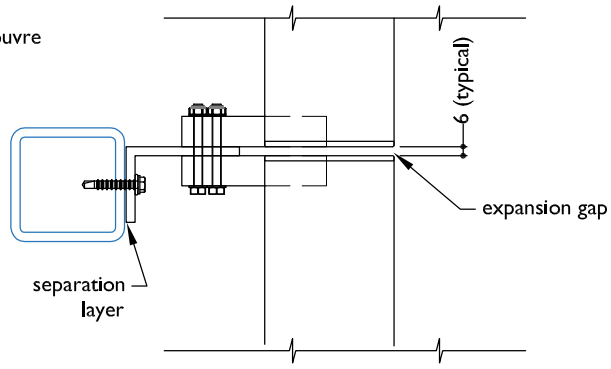


EXPANSION JOINT

## SECTION - BRACKET FIXED 120MM AIRFOIL LOUVRE

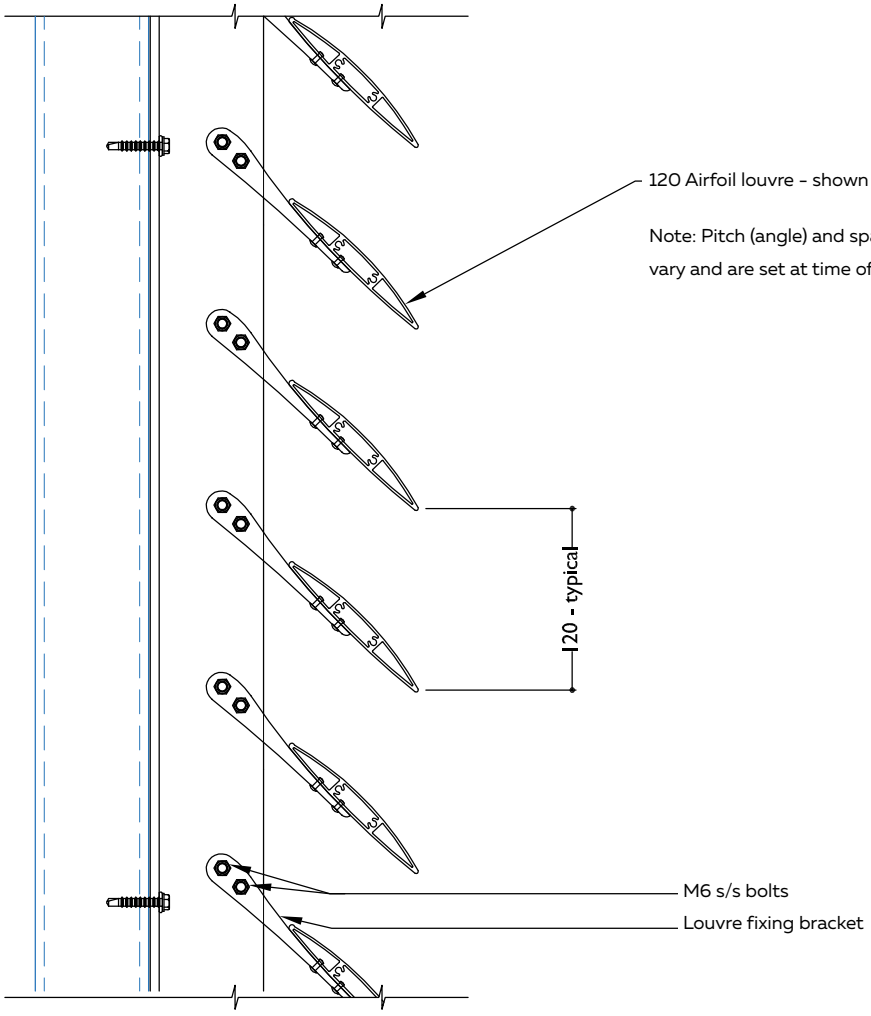



©Louvretec 2025 - All Rights Reserved. Technical specifications subject to change without notice.

## TYPICAL DETAIL 180MM AIRFOIL BRACKET FIXED LOUVRE - VERTICAL PANEL

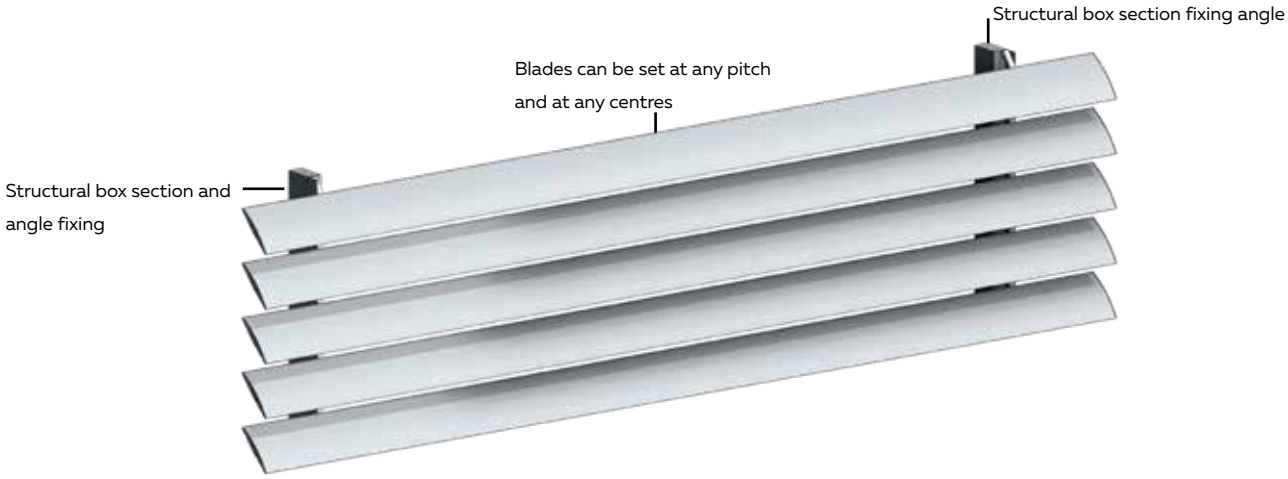


BRACKET FIXED VERTICAL PANEL - 180MM AIRFOIL HORIZONTAL LOUVRES

## TYPICAL DETAIL 180MM AIRFOIL BRACKET FIXED LOUVRE - OVERHEAD PANEL

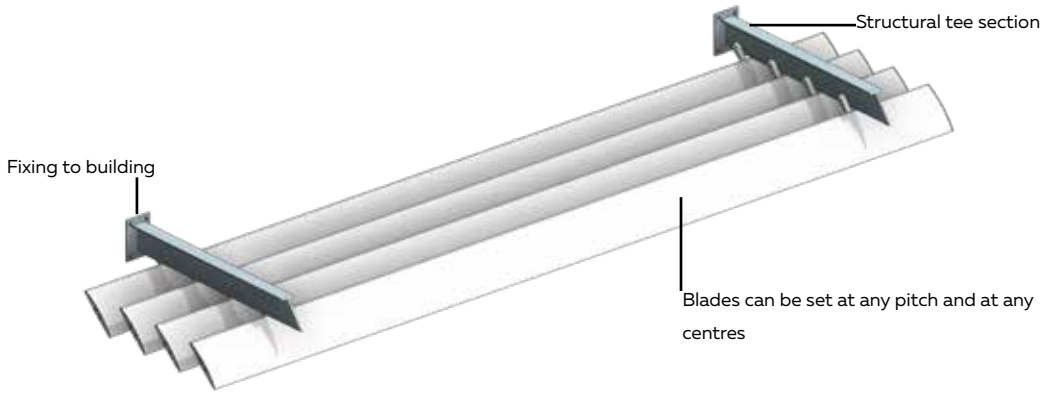


BRACKET FIXED OVERHEAD PANEL - 180MM AIRFOIL
HORIZONTAL LOUVRES


©Louvretec 2025 – All Rights Reserved. Technical specifications subject to change without notice.

## PLAN - BRACKET FIXED 180MM AIRFOIL LOUVRE

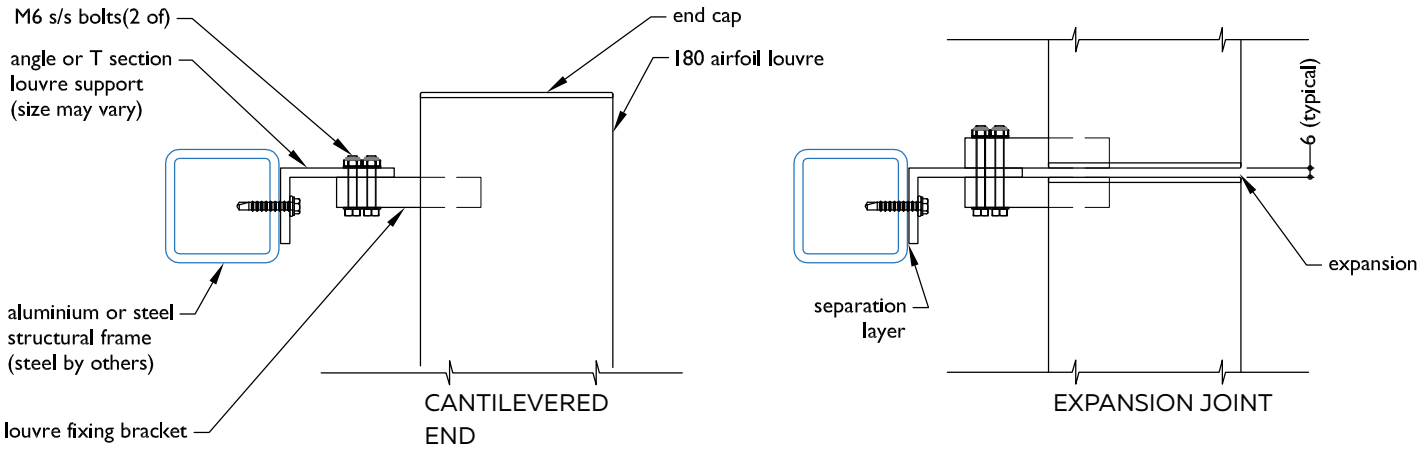


## SECTION - BRACKET FIXED 180MM AIRFOIL LOUVRE

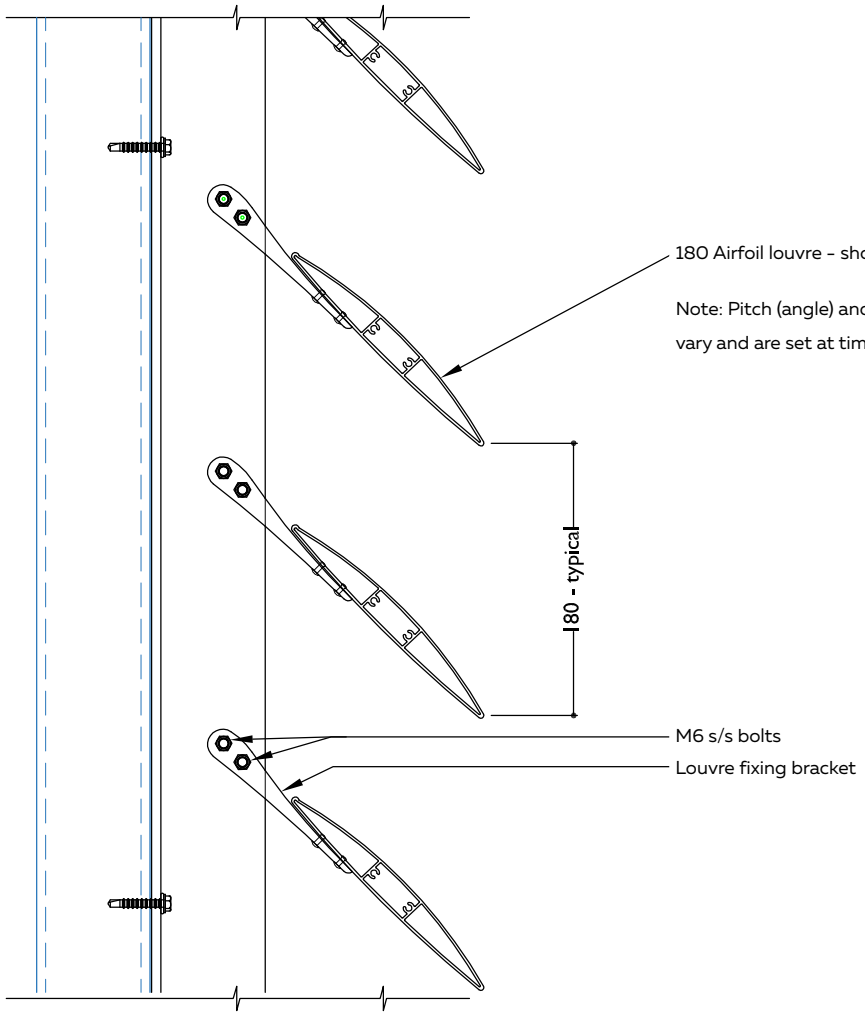



©Louvretec 2025 – All Rights Reserved. Technical specifications subject to change without notice.

## TYPICAL DETAIL : BRACKET FIXED OVERHEAD SUN LOUVRES
## SPANS AT A GLANCE; 120MM AIRFOIL & 180MM AIRFOIL LOUVRES (GROUP 2 LOUVRES)

OVERHEAD EYEBROW
BRACKET FIXED LOUVRES

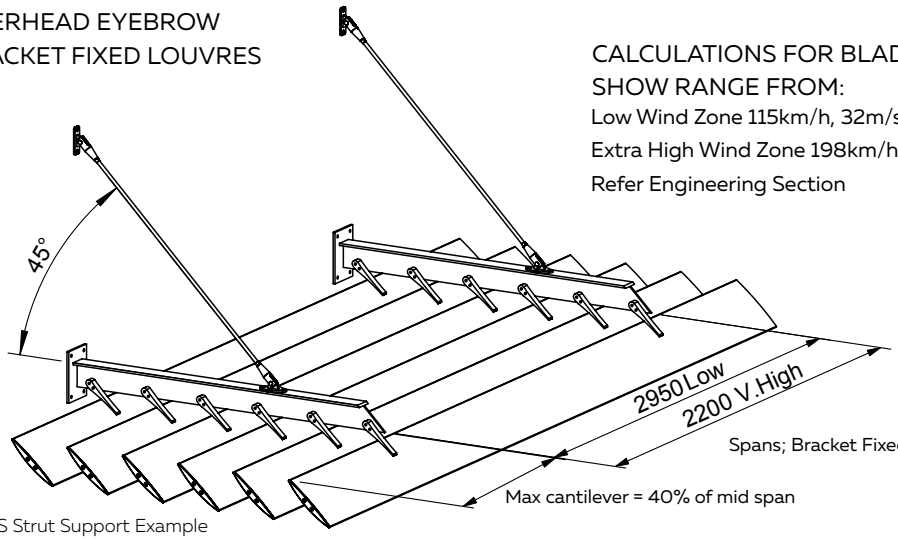


Ø20 SS Strut Support Example
Strut at Optimum 45° angle

CALCULATIONS FOR BLADE SPANS
SHOW RANGE FROM:
Low Wind Zone 115km/h, 32m/s to
Extra High Wind Zone 198km/h, 55 m/s
Refer Engineering Section

KEY
LF = Free span
LS15 = Strut @ 15°
LS30 = Strut @ 30°
LS45 = Strut @ 45°

Plain Column:
Low - Med Wind Zone.
Up to 133Km/h - 37m/s

Shaded Column:
High - VHigh Wind Zone.
Up to 179Km/h - 50m/s

## TYPICAL DETAIL : BRACKET FIXED OVERHEAD WALL STRUTS
## SPANS AT A GLANCE; 120MM AIRFOIL, 180MM AIRFOIL & 200MM MAXI LOUVRES (GROUP 2 LOUVRES)

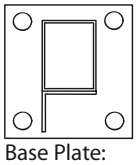

Base Plate:
150 x 100 x 6mm
Box Section:
75 x 50 x 2.5mm
Angle:
50 x 50 x 3mm

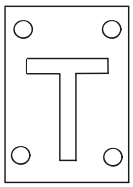

Base Plate: 120 x 100 x 6mm
'T' Section: 75 x 50 x 6mm

Free Span

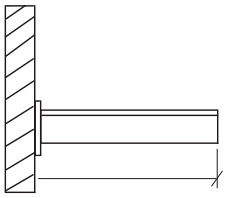

| LF | LF |
|---|---|
| 500 | 500 |

Strut Support

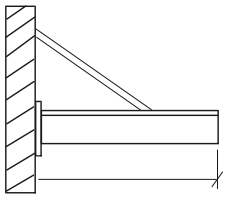

Strut Ø16mm
Stainless steel

| LS15 | LS15 |
|---|---|
| 800 | 600 |

| LS30 | LS30 |
|---|---|
| 900 | 700 |

| LS45 | LS45 |
|---|---|
| 900 | 700 |

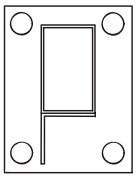

Base Plate:
225 x 100 x 6mm
Box Section:
100 x 50 x 3mm
Angle:
50 x 50 x 6mm

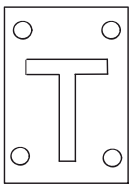

Base Plate: 170 x 100 x 6mm
'T' Section: 100 x 50 x 6mm

Free Span

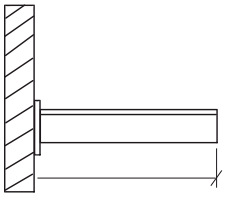

| LF | LF |
|---|---|
| 700 | 600 |

Strut Support

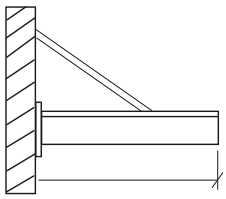

Strut Ø20mm
Stainless steel

| LS15 | LS15 |
|---|---|
| 1100 | 900 |

| LS30 | LS30 |
|---|---|
| 1200 | 1000 |

| LS45 | LS45 |
|---|---|
| 1300 | 1000 |

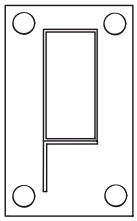

Base Plate:
275 x 100 x 6mm
Box Section:
150 x 50 x 3mm
Angle:
50 x 50 x 6mm

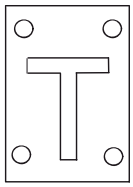

Base Plate: 170 x 100 x 6mm
'T' Section: 100 x 50 x 6mm

Free Span

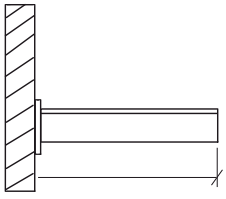

| LF | LF |
|---|---|
| 1000 | 900 |

Strut Support

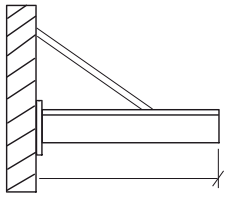

Strut Ø42mm
Stainless steel

| LS15 | LS15 |
|---|---|
| 1400 | 1100 |

| LS30 | LS30 |
|---|---|
| 1600 | 1300 |

| LS45 | LS45 |
|---|---|
| 1700 | 1400 |



FILE: SUN LOUVRES BRACKET FIXED 10.5.22
DATE MODIFIED: 01/10/2024 SCALE:
www.louvretec.co.nz www.louvretec.com.au

©Louvretec 2025 - All Rights Reserved. Technical specifications subject to change without notice.

# GROUP 3 LOUVRE

Airfoil Louvres: 200MM MAXI LOUVRE

## 200MM MAXI LOUVRE

Most specified Maxi Louvre

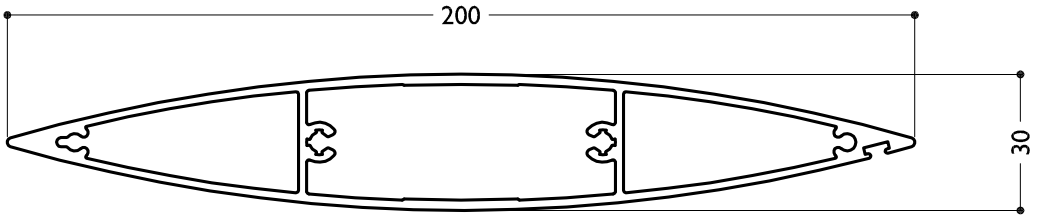


NTS

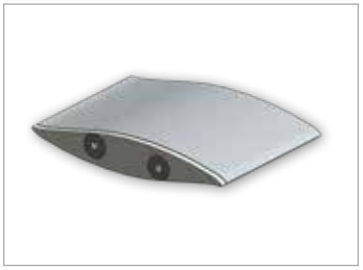

200MM MAXI LOUVRE

REFER TECHNICAL DETAILS PAGE 10.2.25

**TYPICAL DETAIL: BRACKET FIXED VERTICAL PANEL - 200MM MAXI HORIZONTAL LOUVRES**
(GROUP 3 LOUVRE COLLECTION)

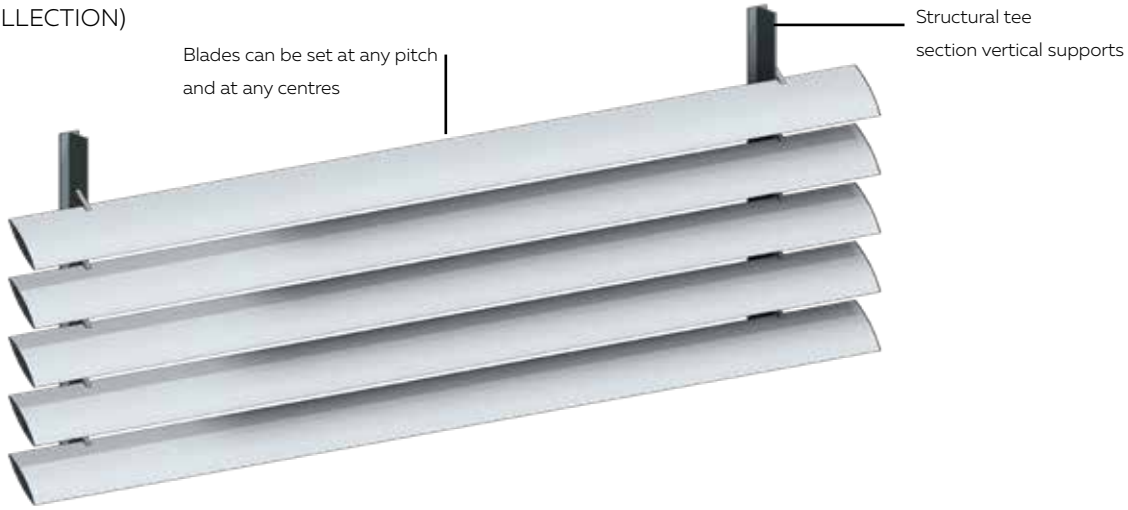


**TYPICAL DETAIL: BRACKET FIXED OVERHEAD PANEL - 200MM MAXI HORIZONTAL LOUVRES**
(GROUP 3 LOUVRE COLLECTION)

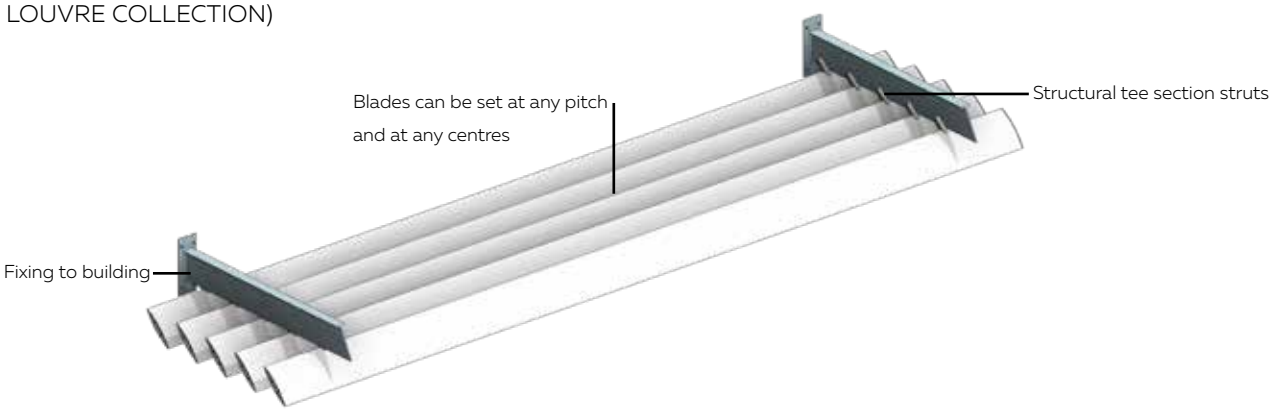


©Louvretec 2025 - All Rights Reserved. Technical specifications subject to change without notice.

PLAN - BRACKET FIXED 200MM MAXI LOUVRE

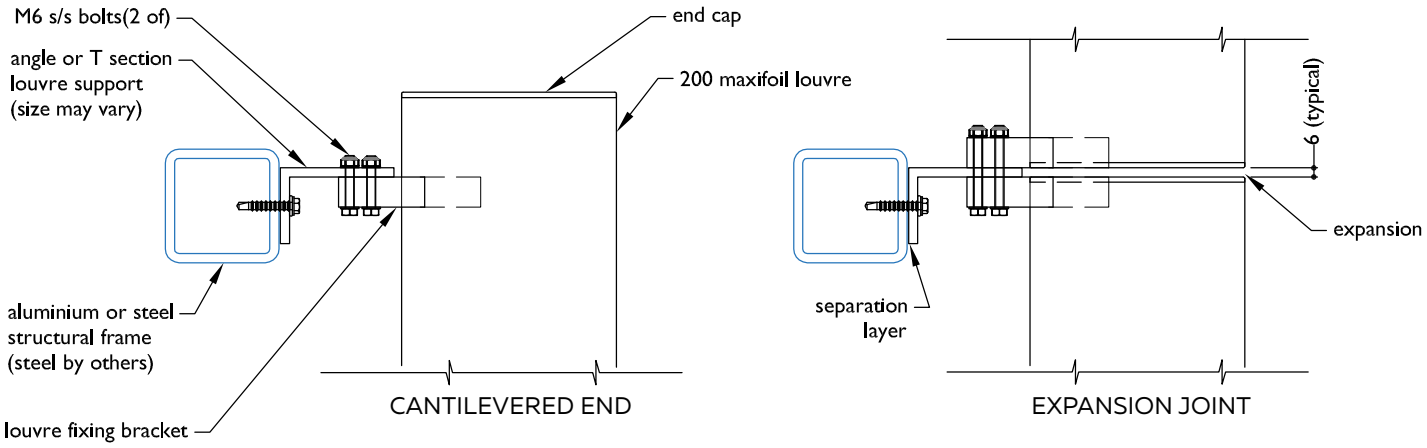


SECTION - BRACKET FIXED 200MM MAXI LOUVRE

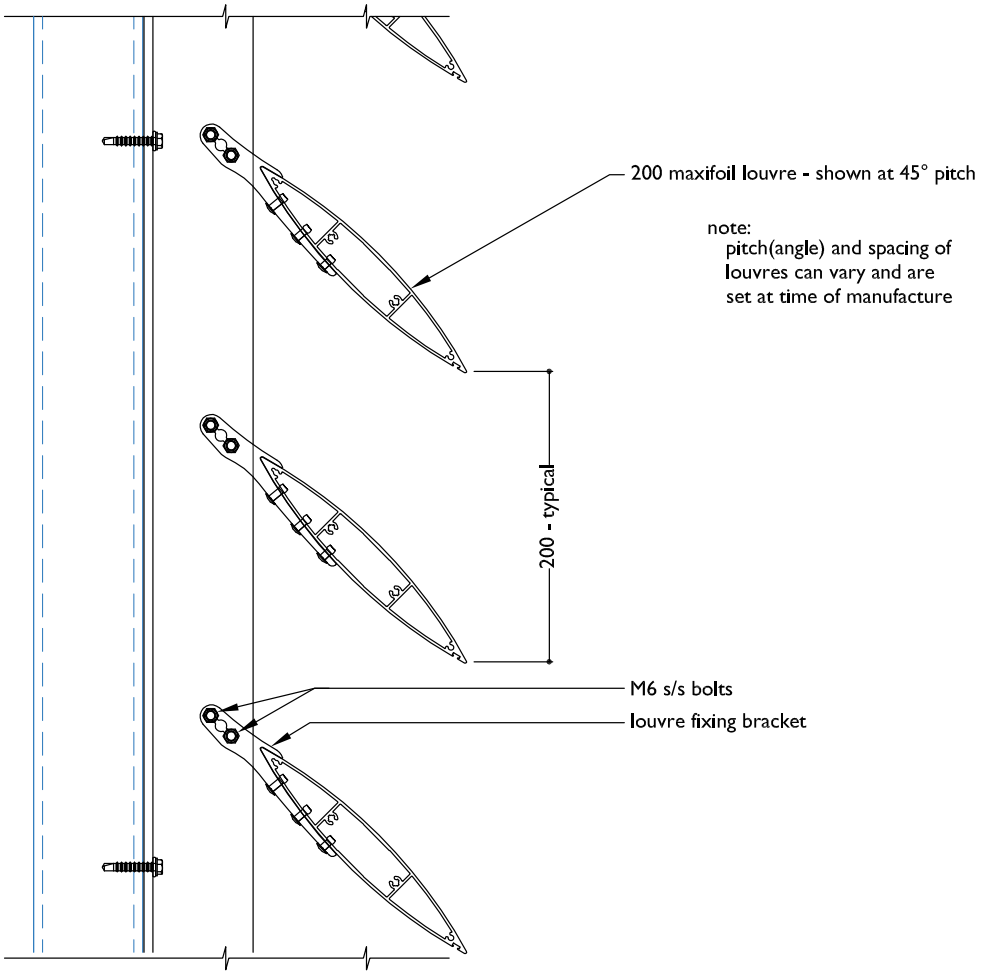


BRACKET FIXED 200MM MAXI LOUVRE PANEL



FILE: SUN LOUVRES BRACKET FIXED 10.5.24 DATE MODIFIED: 01/10/2024 SCALE:
www.louvretec.co.nz www.louvretec.com.au

©Louvretec 2025 - All Rights Reserved. Technical specifications subject to change without notice.

## TYPICAL DETAIL: BRACKET FIXED OVERHEAD SPANS AT A GLANCE 200MM MAXI LOUVRES

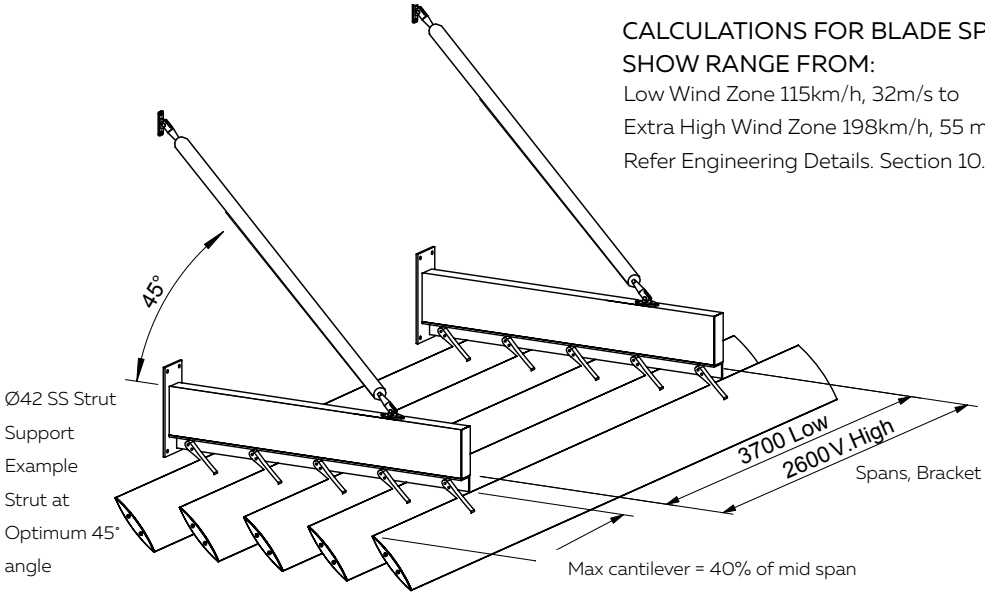


Ø42 SS Strut Support Example Strut at Optimum 45° angle

CALCULATIONS FOR BLADE SPANS SHOW RANGE FROM:
Low Wind Zone 115km/h, 32m/s to
Extra High Wind Zone 198km/h, 55 m/s
Refer Engineering Details. Section 10.2.25

KEY
LF = Free span
LS15 = Strut @ 15°
LS30 = Strut @ 30°
LS45 = Strut @ 45°

Plain Column:
Low - Med Wind Zone.
Up to 133Km/h - 37m/s

Shaded Column:
High - VHigh Wind Zone.
Up to 179Km/h - 50m/s

## TYPICAL DETAIL: BRACKET FIXED OVERHEAD WALL STRUTS FOR 180MM AIRFOIL & 200MM MAXI LOUVRE SPANS AT A GLANCE (FROM GROUP 2 & 3 LOUVRES COLLECTION)

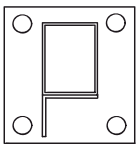

Base Plate:
150 x 100 x 6mm
Box Section:
75 x 50 x 2.5mm
Angle:
50 x 50 x 3mm

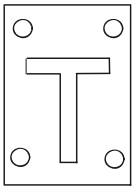

Base Plate: 120 x 100 x 6mm
'T' Section: 75 x 50 x 6mm

Free Span

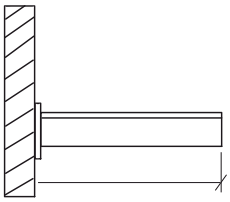

| LF | LF |
|---|---|
| 500 | 500 |

Strut Support

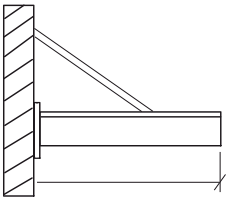

Strut Ø16mm
Stainless steel

| LS15 | LS15 |
|---|---|
| 800 | 600 |

| LS30 | LS30 |
|---|---|
| 900 | 700 |

| LS45 | LS45 |
|---|---|
| 900 | 700 |

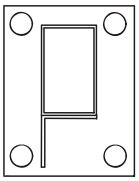

Base Plate:
225 x 100 x 6mm
Box Section:
100 x 50 x 3mm
Angle:
50 x 50 x 6mm

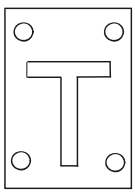

Base Plate: 170 x 100 x 6mm
'T' Section: 100 x 50 x 6mm

Free Span

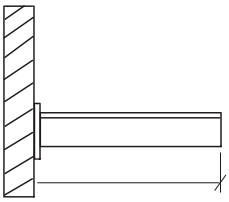

| LF | LF |
|---|---|
| 700 | 600 |

Strut Support

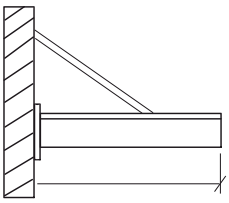

Strut Ø20mm
Stainless steel

| LS15 | LS15 |
|---|---|
| 1100 | 900 |

| LS30 | LS30 |
|---|---|
| 1200 | 1000 |

| LS45 | LS45 |
|---|---|
| 1300 | 1000 |

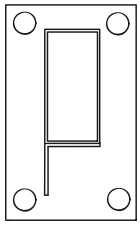

Base Plate:
275 x 100 x 6mm
Box Section:
150 x 50 x 3mm
Angle:
50 x 50 x 6mm

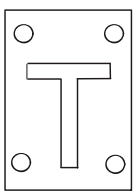

Base Plate: 170 x 100 x 6mm
'T' Section: 100 x 50 x 6mm

Free Span

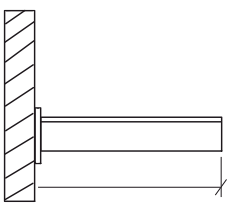

| LF | LF |
|---|---|
| 1000 | 900 |

Strut Support

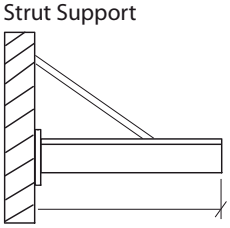

Strut Ø42mm
Stainless steel

| LS15 | LS15 |
|---|---|
| 1400 | 1100 |

| LS30 | LS30 |
|---|---|
| 1600 | 1300 |

| LS45 | LS45 |
|---|---|
| 1700 | 1400 |


©Louvretec 2025 – All Rights Reserved. Technical specifications subject to change without notice.

# GROUP 4 LOUVRE

Maxi Airfoil shaped louvre: 300MM MAXI LOUVRE

## 300MM MAXI LOUVRE

Elliptical shape

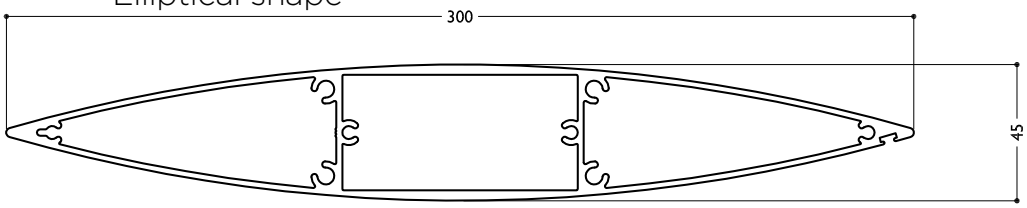


NTS



300MM MAXI LOUVRE

The 300mm Maxi Louvre is now available in a motorised option using Louvretec's new Maxi-Drive pivot system.
This new pivot system hides both the motor and pivot mechanism within a structural aluminium support frame.
Powered by Somfy, Maxi-Drive incorporates both a reduction gearbox and supporting drive arm, providing strength needed for pivoting large blade louvres. Ideal for both residential and commercial applications.
Also available as End or Bracket Fixed, Horizontal or Vertical Overhead Panels.

REFER TECHNICAL DETAILS
PAGE 10.4.32

**TYPICAL DETAIL: BRACKET FIXED VERTICAL PANEL 300MM MAXI LOUVRE**
(GROUP 4 LOUVRE COLLECTION)

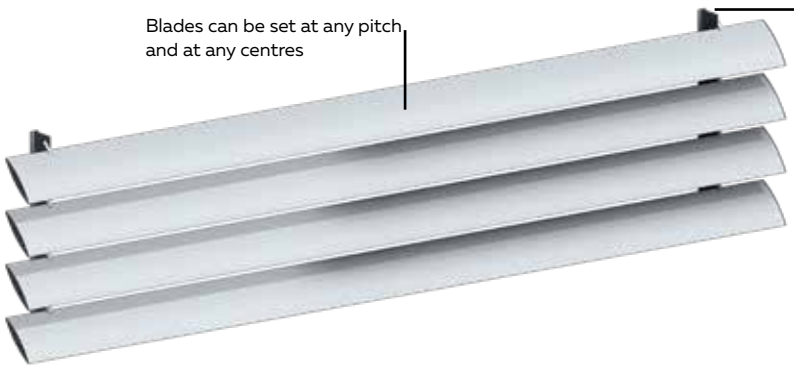


BRACKET FIXED
VERTICAL PANEL - HORIZONTAL LOUVRES

**TYPICAL DETAIL: BRACKET FIXED OVERHEAD PANEL 300MM MAXI LOUVRE**
(GROUP 4 LOUVRE COLLECTION)

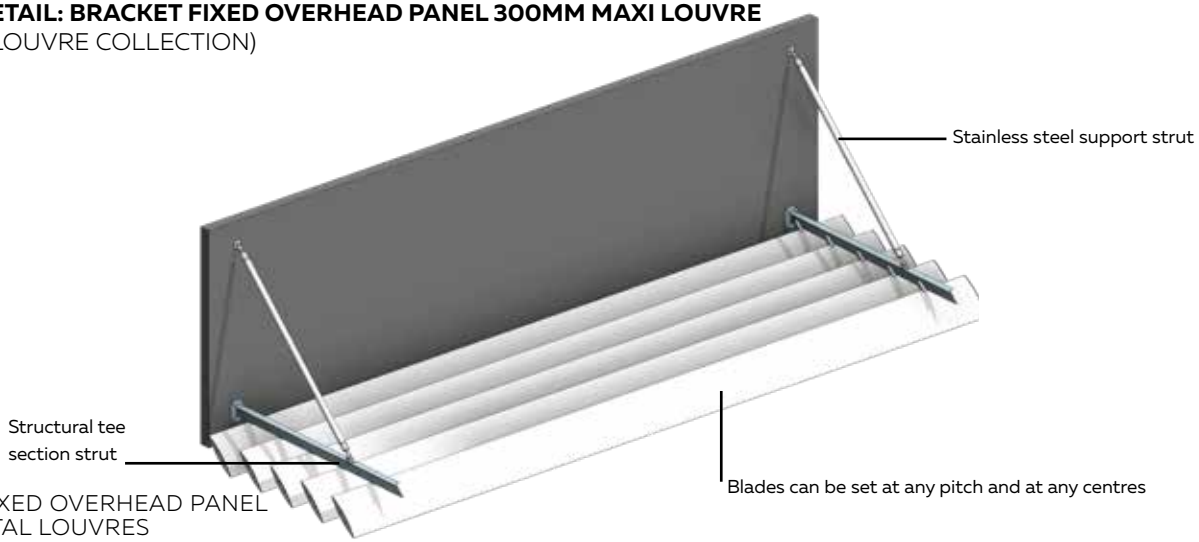


BRACKET FIXED OVERHEAD PANEL
- HORIZONTAL LOUVRES



©Louvretec 2025 – All Rights Reserved. Technical specifications subject to change without notice.

## PLAN - BRACKET FIXED 300MM MAXI LOUVRE

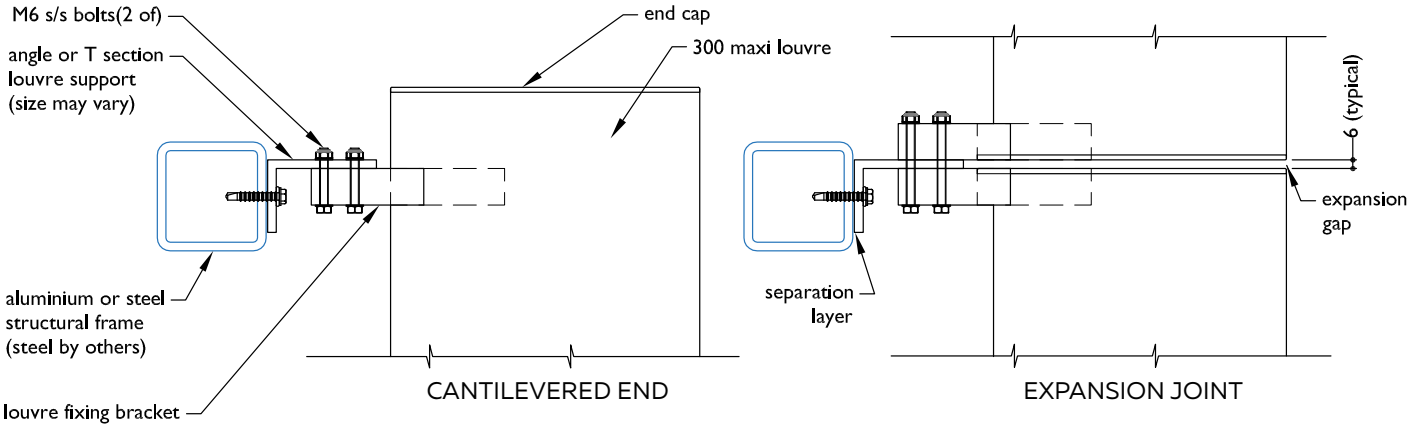


## SECTION - BRACKET FIXED 300MM MAXI LOUVRE

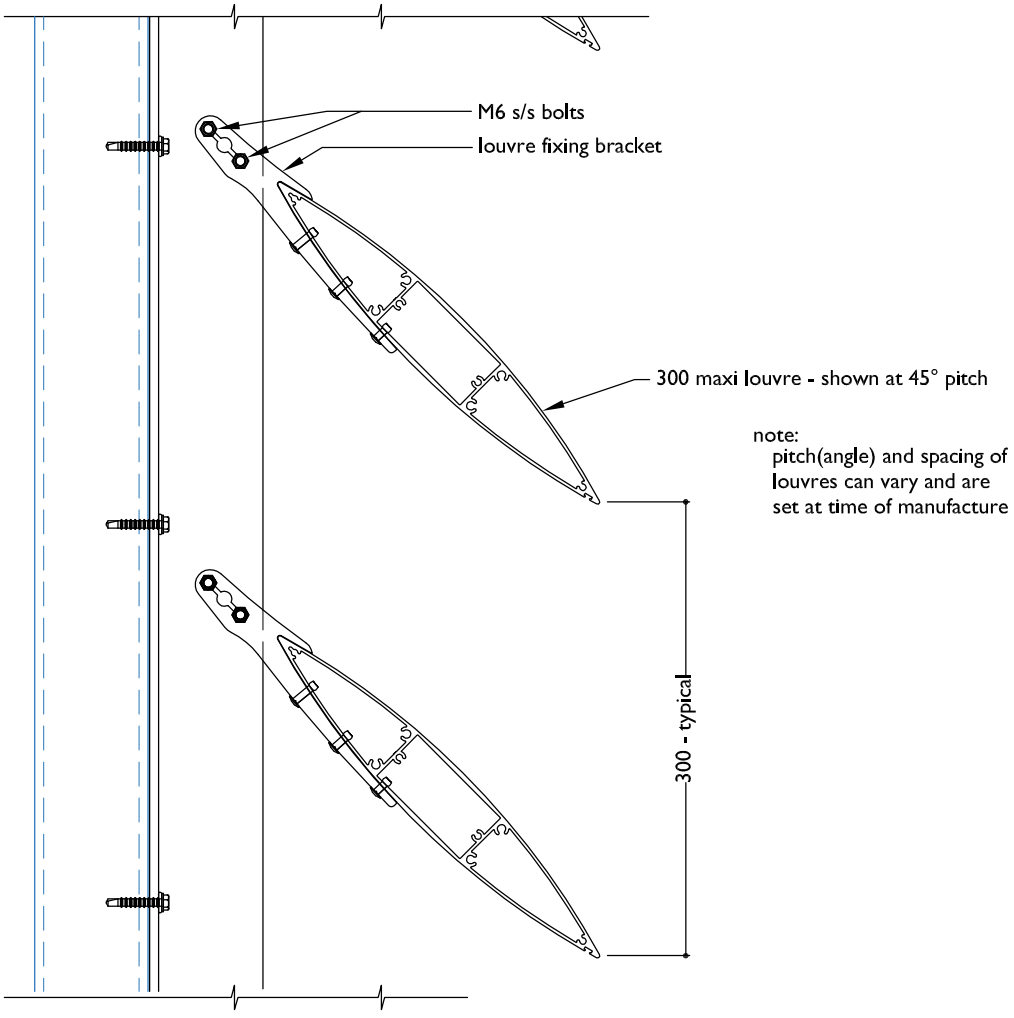


BRACKET FIXED 300MM MAXI LOUVRE


©Louvretec 2025 – All Rights Reserved. Technical specifications subject to change without notice.

PLAN - BRACKET FIXED 300MM MAXI LOUVRE - EYEBROW CONFIGURATION

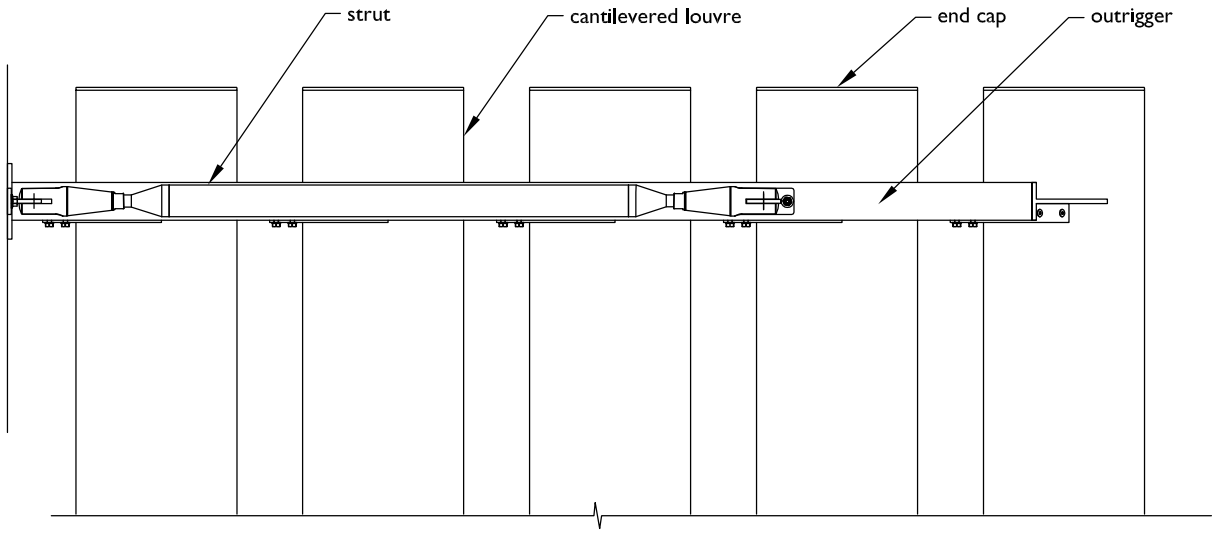


SECTION - BRACKET FIXED 300MM MAXI LOUVRE - EYEBROW CONFIGURATION

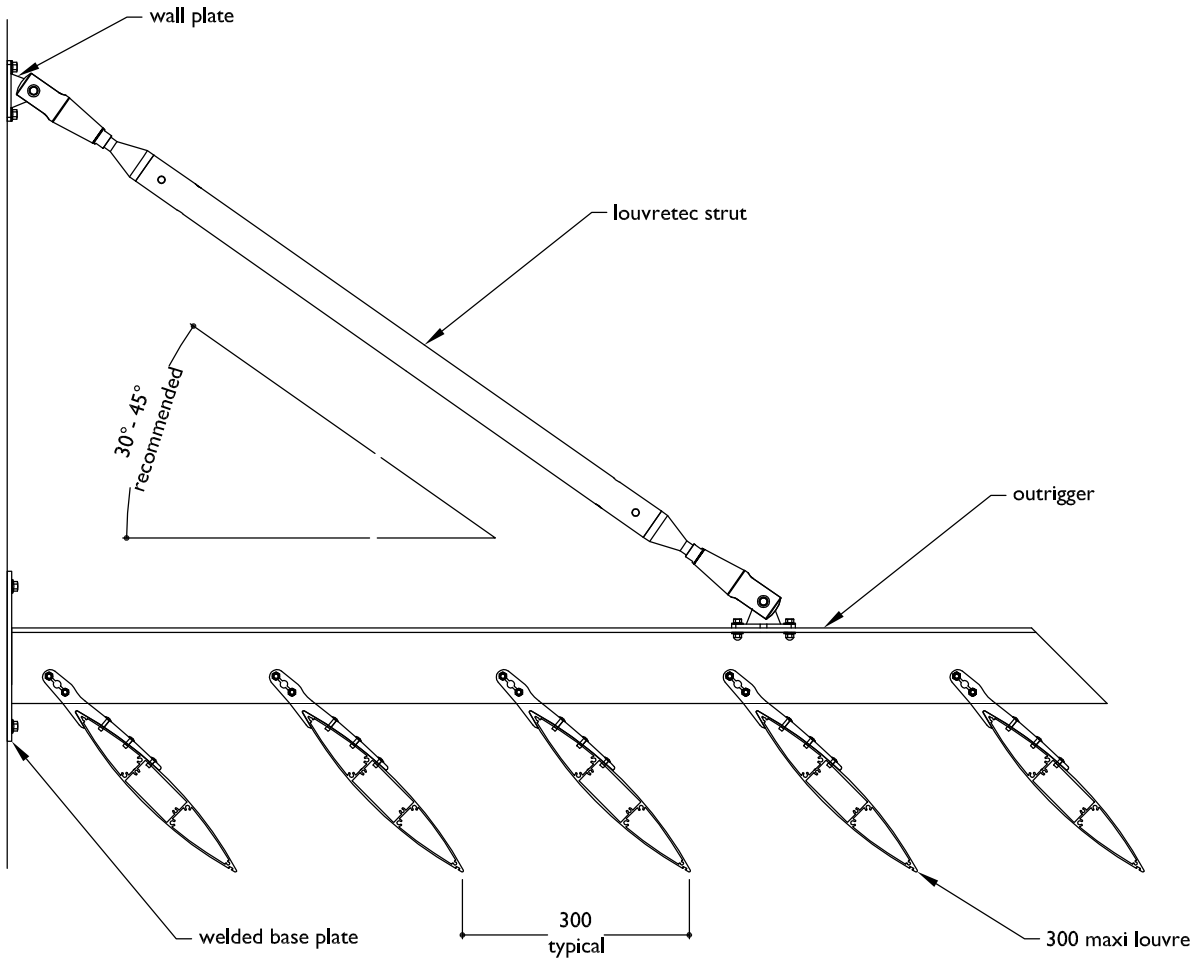




FILE: SUN LOUVRES BRACKET FIXED 10.5.28 DATE MODIFIED: 01/10/2024 SCALE:
www.louvretec.co.nz www.louvretec.com.au

©Louvretec 2025 - All Rights Reserved. Technical specifications subject to change without notice.

# GROUP 5 LOUVRES

Mid size Rectangular Louvres: 125 MM WEATHERBOARD, 180 WEATHERBOARD, 150 HELENA BAY LOUVRES

## 125MM WEATHERBOARD PANEL

Wall panel | sun louvre

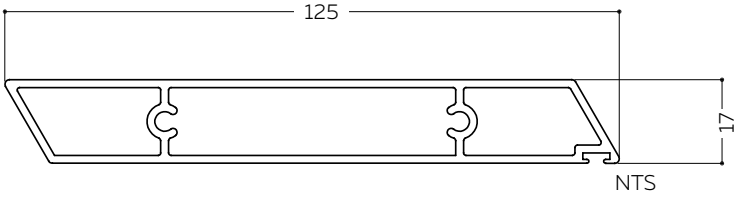




125MM WEATHERBOARD PANEL

REFER TECHNICAL DETAILS PAGES 10.4.26

## 180MM WEATHERBOARD PANEL

Wall panel | sun louvre | balustrade

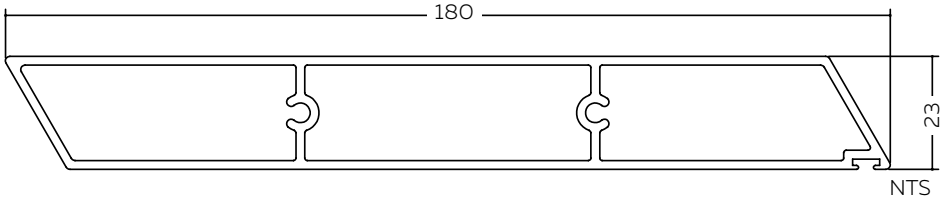




180MM WEATHERBOARD PANEL

REFER TECHNICAL DETAILS PAGES 10.4.27

## 150MM HELENA BAY 45° FIXED WEATHERBOARD PANEL

Wall panel | sun louvre | balustrade

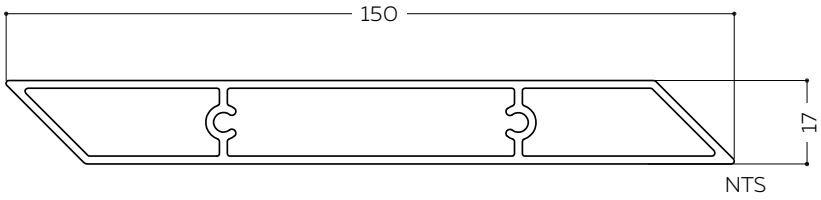




150MM HELENA BAY 45° FIXED

REFER TECHNICAL DETAILS PAGES 10.4.25

©Louvretec 2025 – All Rights Reserved. Technical specifications subject to change without notice.

## TYPICAL DETAIL 125MM WEATHERBOARD BRACKET FIXED - VERTICAL PANEL & OVERHEAD PANEL

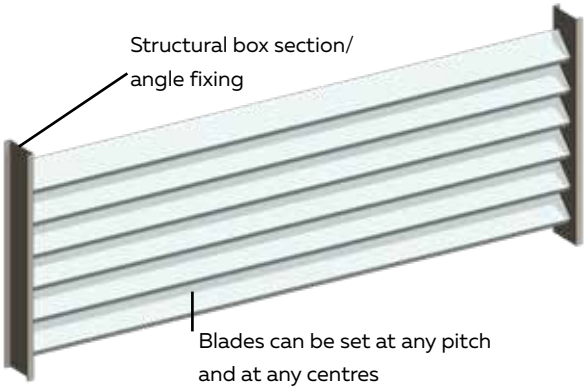


BRACKET FIXED VERTICAL PANEL;
150MM MIDI HORIZONTAL LOUVRES

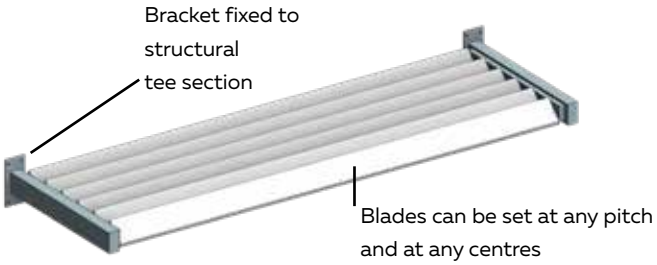


BRACKET FIXED OVERHEAD PANEL;
150MM MIDI HORIZONTAL LOUVRES

## TYPICAL DETAIL 180MM WEATHERBOARD BRACKET FIXED PANEL - OVERHEAD PANEL

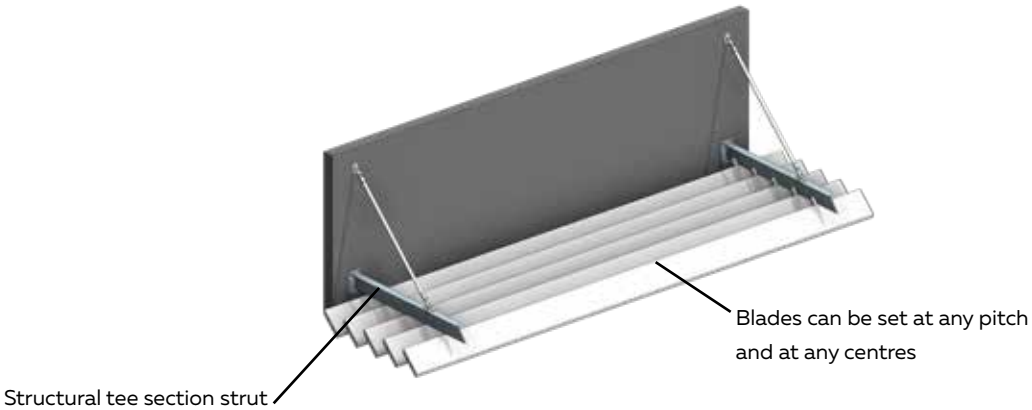


BRACKET FIXED OVERHEAD PANEL; 180MM WEATHERBOARD
HORIZONTAL LOUVRES

## TYPICAL DETAIL 150MM HELENA BAY 45° FIXED WEATHERBOARD PANEL - BRACKET FIXED



BRACKET FIXED VERTICAL PANEL;
150MM HELENA BAY HORIZONTAL LOUVRES



BRACKET FIXED OVERHEAD PANEL;
150MM HELENA BAY HORIZONTAL LOUVRES


©Louvretec 2025 – All Rights Reserved. Technical specifications subject to change without notice.

# TYPICAL DETAIL: BRACKET FIXED PANELS
# 125MM WEATHERBOARD & 180MM WEATHERBOARD LOUVRES

## PLAN - BRACKET FIXED 125 WEATHERBOARD LOUVRE

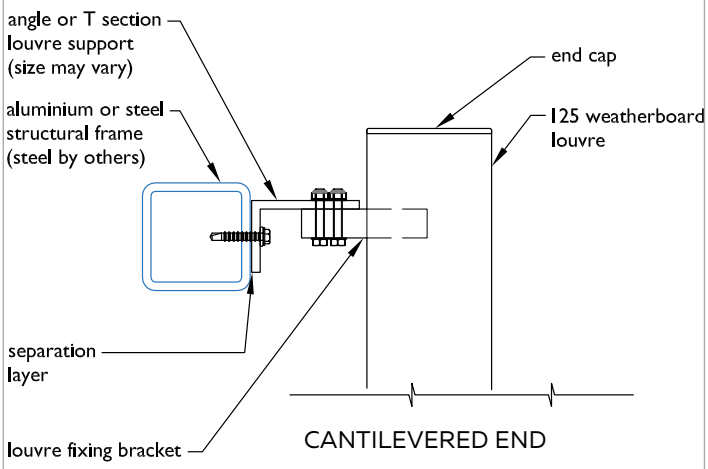


## PLAN - BRACKET FIXED 180 WEATHERBOARD LOUVRE

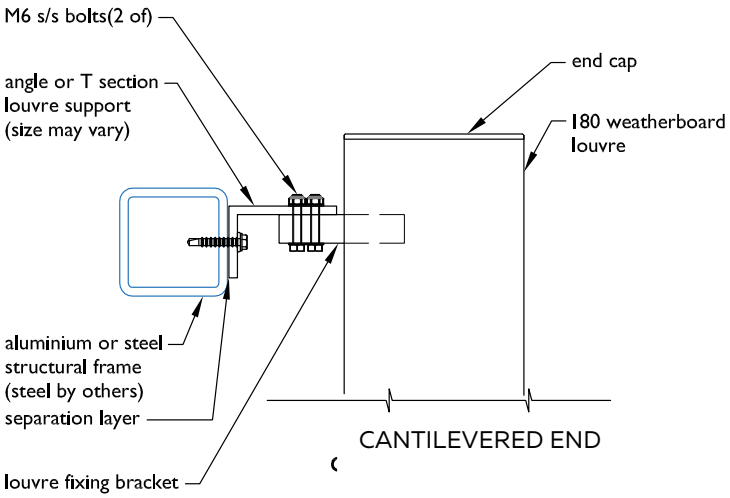


## SECTION - BRACKET FIXED 125 WEATHERBOARD LOUVRE

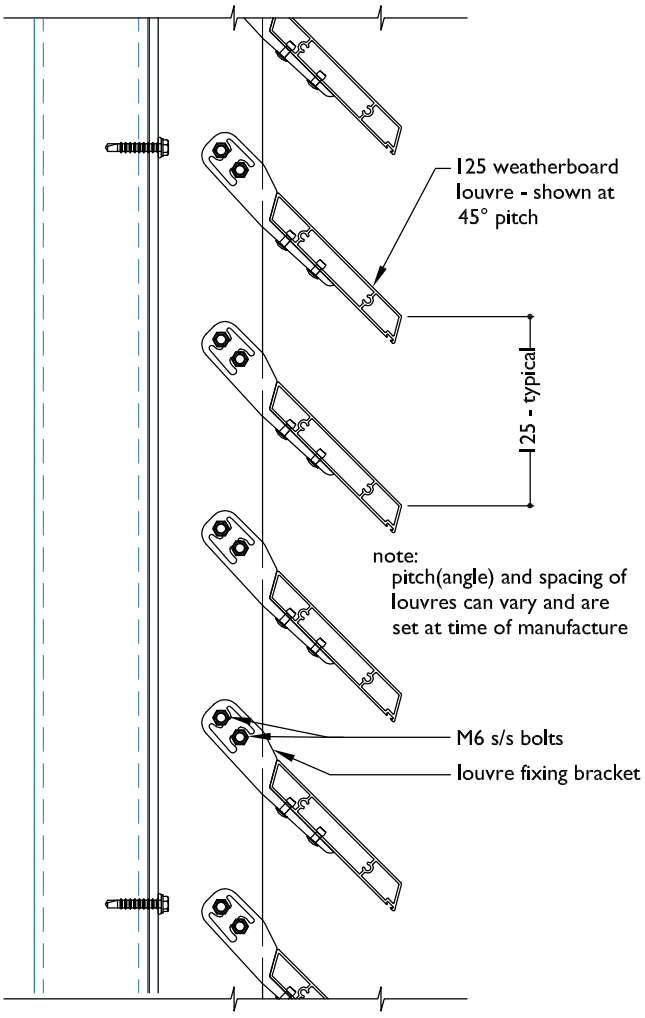


## SECTION - BRACKET FIXED 180 WEATHERBOARD LOUVRE

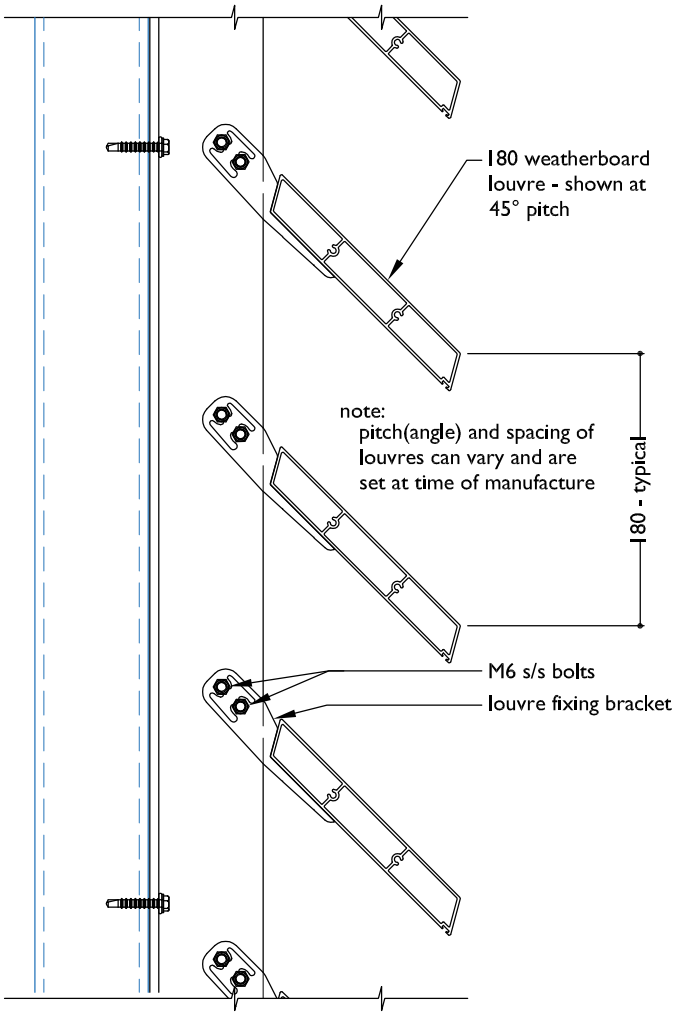



©Louvretec 2025 – All Rights Reserved. Technical specifications subject to change without notice.

## PLAN - BRACKET FIXED 150MM HELENA BAY 45° WEATHERBOARD LOUVRE

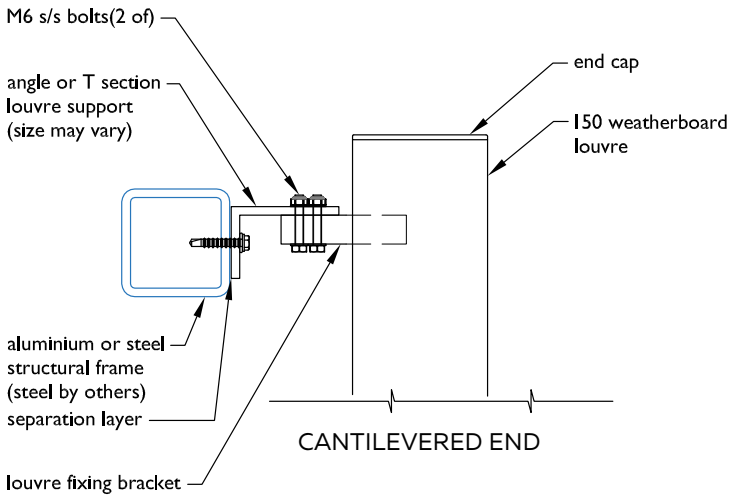


## SECTION - BRACKET FIXED 150MM HELENA BAY 45° WEATHERBOARD LOUVRE

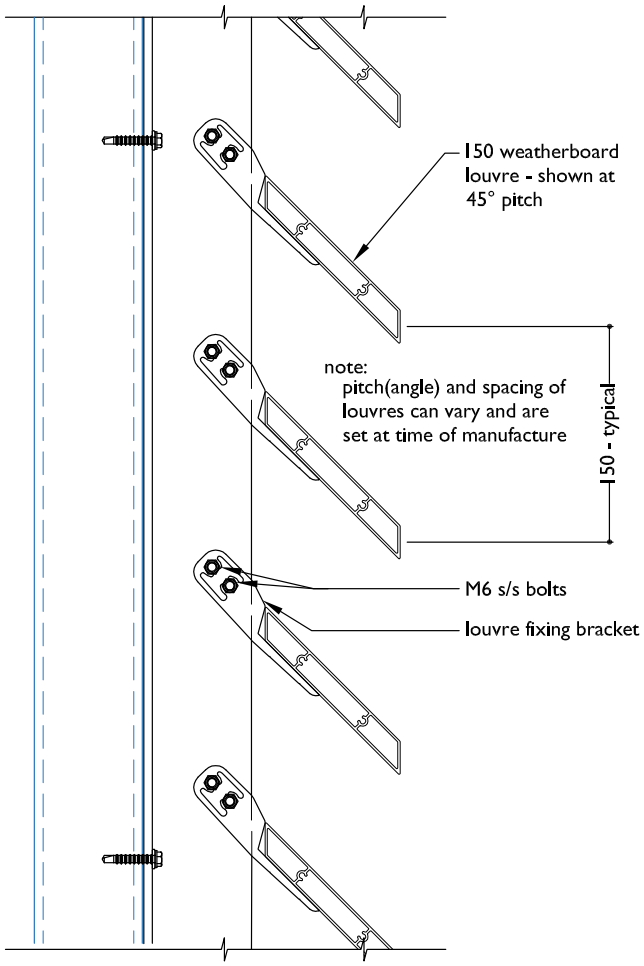




FILE: SUN LOUVRES BRACKET FIXED 10.5.32 DATE MODIFIED: 01/10/2024 SCALE:
www.louvretec.co.nz www.louvretec.com.au

©Louvretec 2025 - All Rights Reserved. Technical specifications subject to change without notice.

# GROUP 6 LOUVRES

Largest Airfoil Shaped Louvre: 600MM MAXI LOUVRE

## 600MM MAXI LOUVRE

### Largest Airfoil Louvre

The 600mm Maxi Louvre is the largest louvre in the range and while primarily used in large spanning commercial projects it has also been specified for residential use. A current trend being larger louvres specified in a wider range of applications.

Available End fixed or Bracket fixed configurations.



600MM MAXI LOUVRE

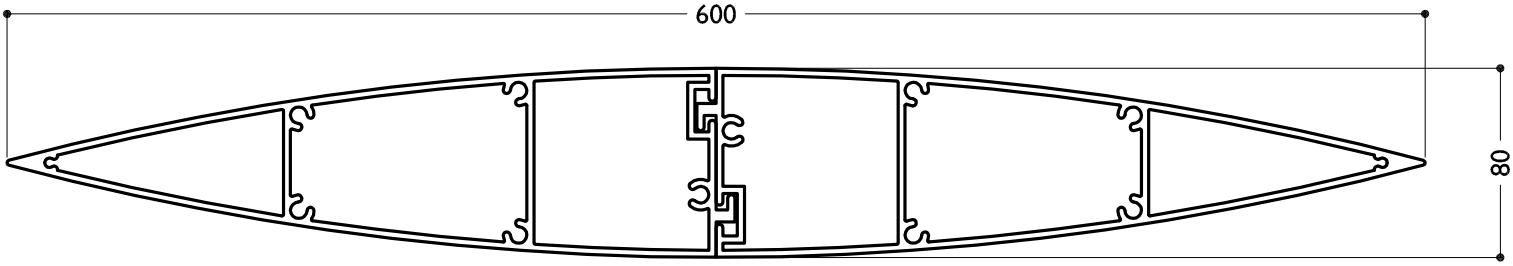


REFER TECHNICAL DETAILS PAGE 10.4.32

NTS

**TYPICAL DETAIL: BRACKET FIXED VERTICAL PANEL 600MM MAXI LOUVRE - HORIZONTAL BLADES**
(GROUP 6 LOUVRE COLLECTION)

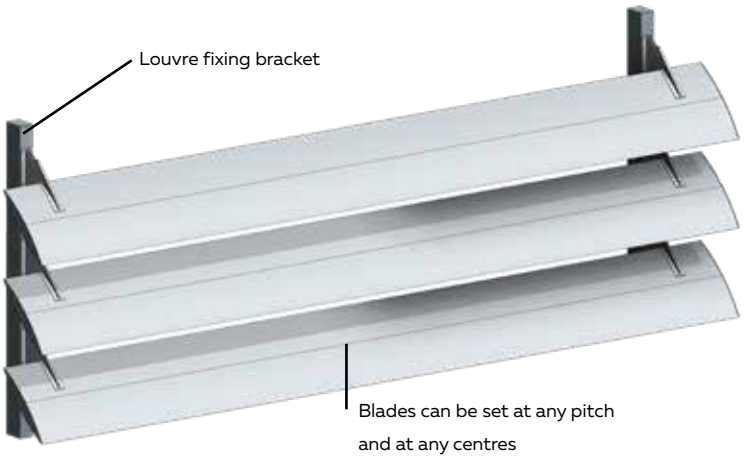


BRACKET FIXED VERTICAL PANEL - 600MM MAXI HORIZONTAL LOUVRES

**TYPICAL DETAIL: BRACKET FIXED VERTICAL PANEL 600MM MAXI LOUVRE - VERTICAL BLADES**
(GROUP 6 LOUVRE COLLECTION)

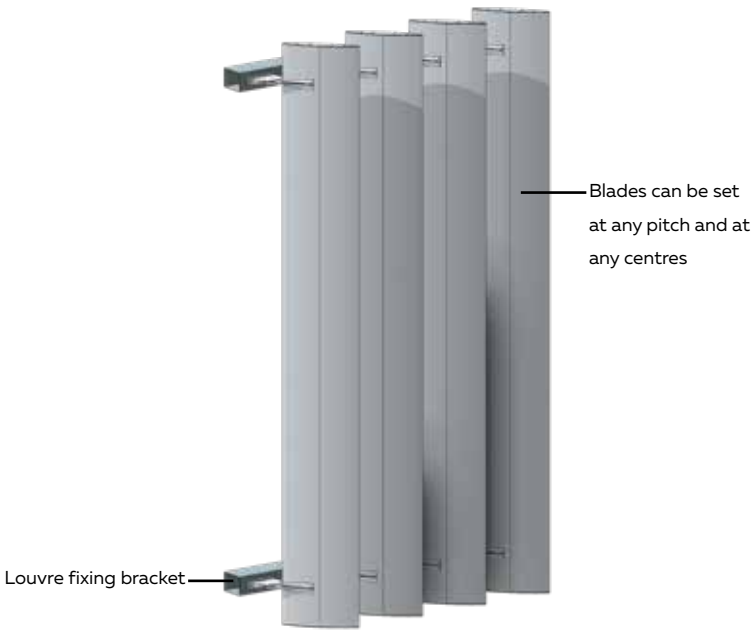


BRACKET FIXED VERTICAL PANEL - 600MM MAXI VERTICAL LOUVRES

©Louvretec 2025 - All Rights Reserved. Technical specifications subject to change without notice.

## PLAN - BRACKET FIXED 600MM MAXI LOUVRE

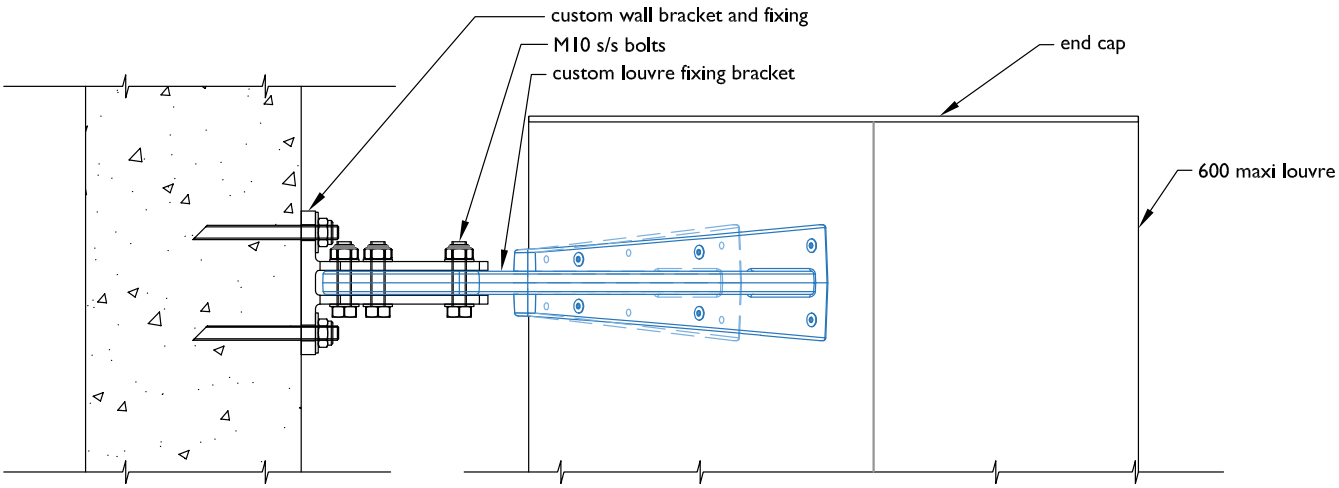


CANTILEVERED END

## SECTION - BRACKET FIXED 600MM MAXI LOUVRE

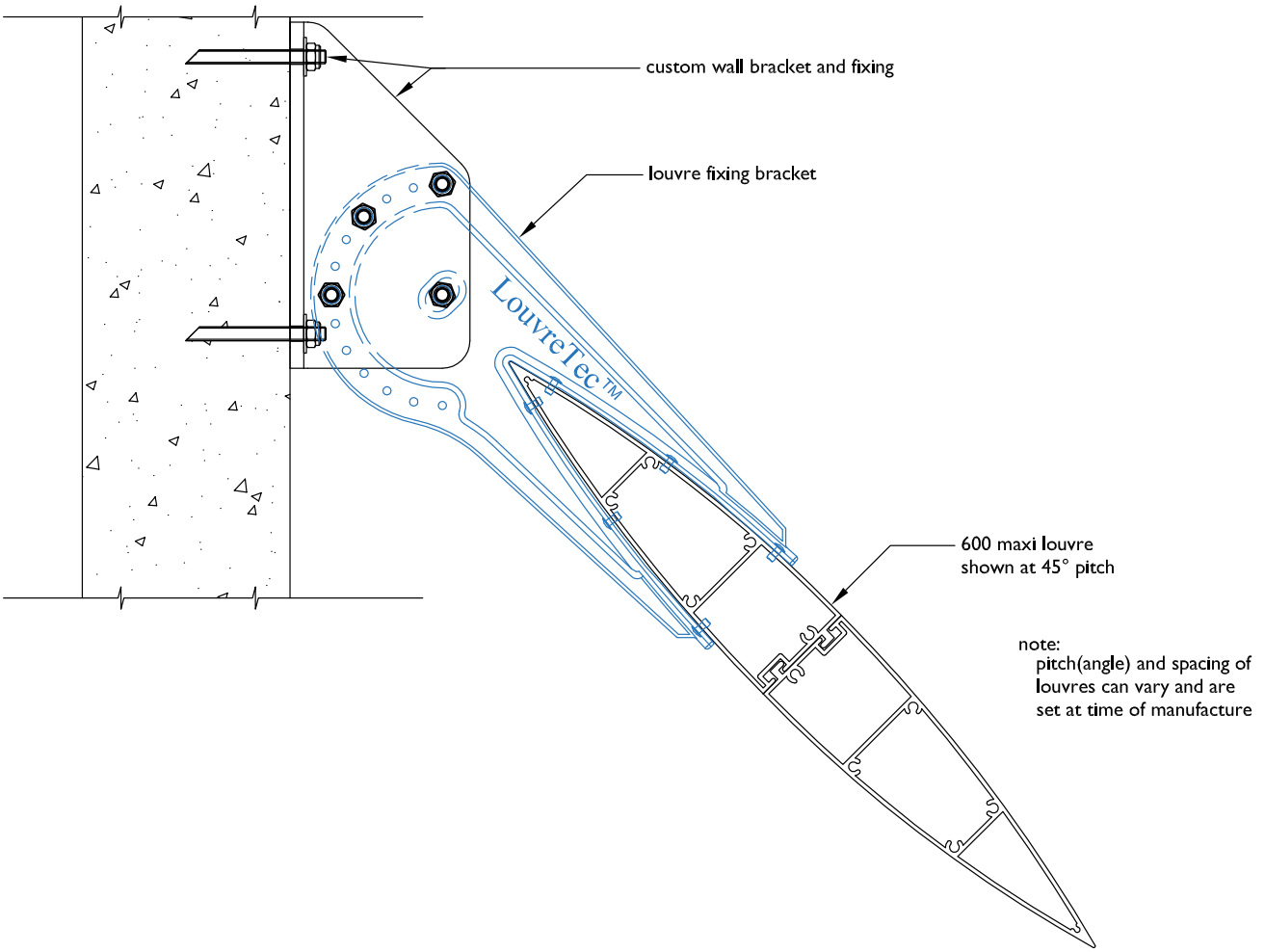



©Louvretec 2025 - All Rights Reserved. Technical specifications subject to change without notice.

# GROUP 7 LOUVRES

Rectangular RL300 SQUARE, RL450 SQUARE, RL600 SQUARE LOUVRES
Rectangular RL300 MITRE, RL450 MITRE, RL600 MITRE LOUVRES

## RL300 SQUARE LOUVRE

Rectangular in length with square corners

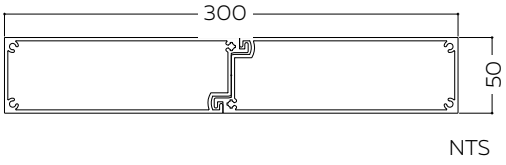


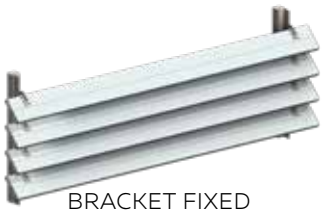

BRACKET FIXED VERTICAL PANEL - HORIZONTAL LOUVRES



RL300 SQUARE LOUVRE

REFER TECHNICAL DETAILS PAGES 10.4.40

## RL450 SQUARE LOUVRE

Rectangular in length with square corners

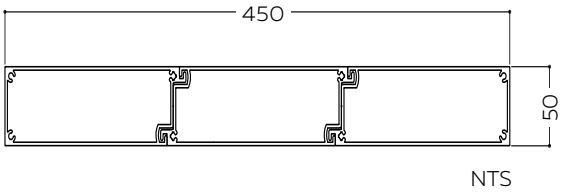




BRACKET FIXED OVERHEAD PANEL - HORIZONTAL LOUVRES



RL450 SQUARE LOUVRE

REFER TECHNICAL DETAILS PAGES 10.4.41

## RL600 SQUARE LOUVRE

Rectangular in length with square corners

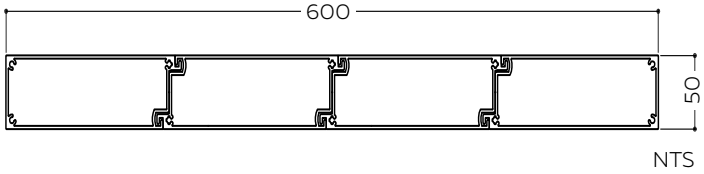


BRACKET FIXED VERTICAL PANEL - VERTICAL LOUVRES





RL600 SQUARE LOUVRE

REFER TECHNICAL DETAILS PAGES 10.4.42

©Louvretec 2025 - All Rights Reserved. Technical specifications subject to change without notice.

# GROUP 7 LOUVRES

Rectangular RL300 SQUARE, RL450 SQUARE, RL600 SQUARE LOUVRES
Rectangular RL300 MITRE, RL450 MITRE, RL600 MITRE LOUVRES

## RL300 MITRE LOUVRE

Rectangular in length with mitred corners

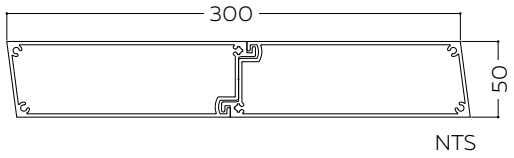




BRACKET FIXED OVERHEAD PANEL - HORIZONTAL LOUVRES



RL300 MITRE LOUVRE

REFER TECHNICAL DETAILS PAGES 10.4.40

## RL450 MITRE LOUVRE

Rectangular in length with mitred corners

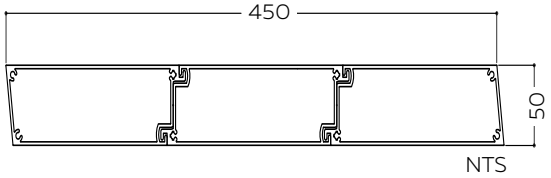




BRACKET FIXED VERTICAL PANEL - HORIZONTAL LOUVRES



RL450 MITRE LOUVRE

REFER TECHNICAL DETAILS PAGES 10.4.41

## RL600 MITRE LOUVRE

Rectangular in length with mitred corners

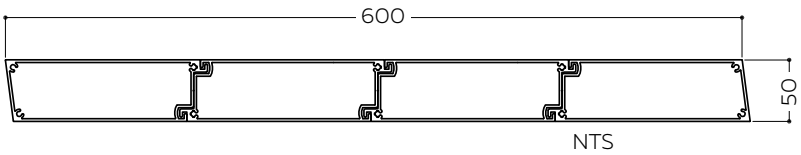


BRACKET FIXED VERTICAL PANEL - VERTICAL LOUVRES





RL600 MITRE LOUVRE

REFER TECHNICAL DETAILS PAGES 10.4.42



©Louvretec 2025 – All Rights Reserved. Technical specifications subject to change without notice.

# TYPICAL DETAIL: BRACKET FIXED PANELS
# RL300 SQUARE, RL450 SQUARE, RL600 SQUARE LOUVRES

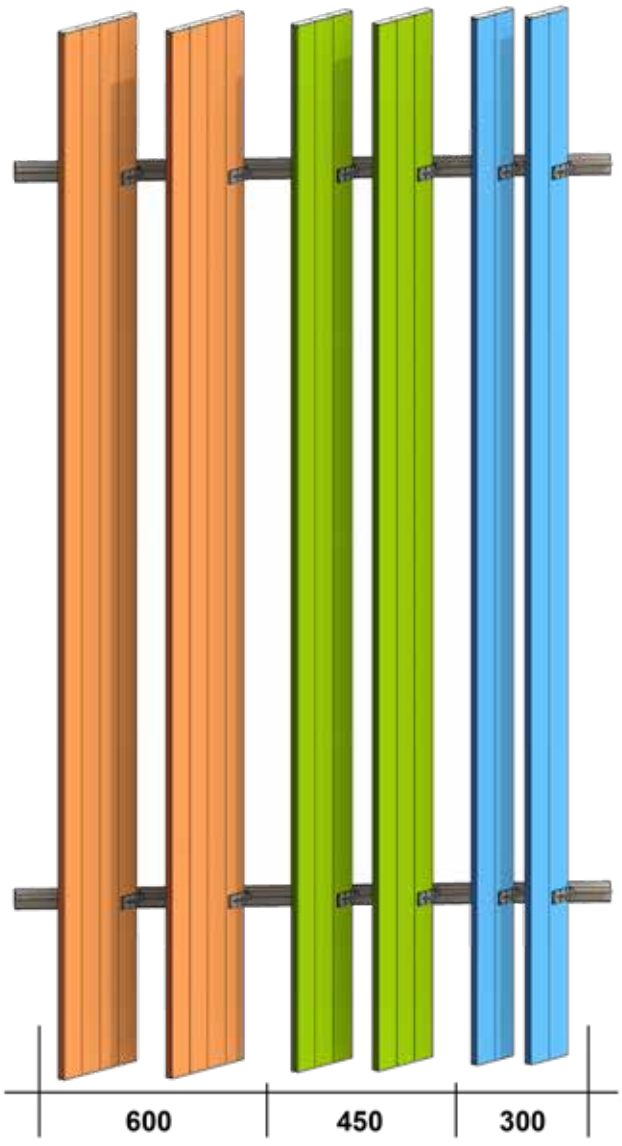

**TYPICAL DETAIL : BRACKET FIXED PANEL**
**RL300 SQUARE, RL450 SQUARE, RL600 SQUARE LOUVRES** (GROUP 7 LOUVRES COLLECTION)

## PLAN - BRACKET FIXED RL 300/450/600 SQUARE LOUVRE

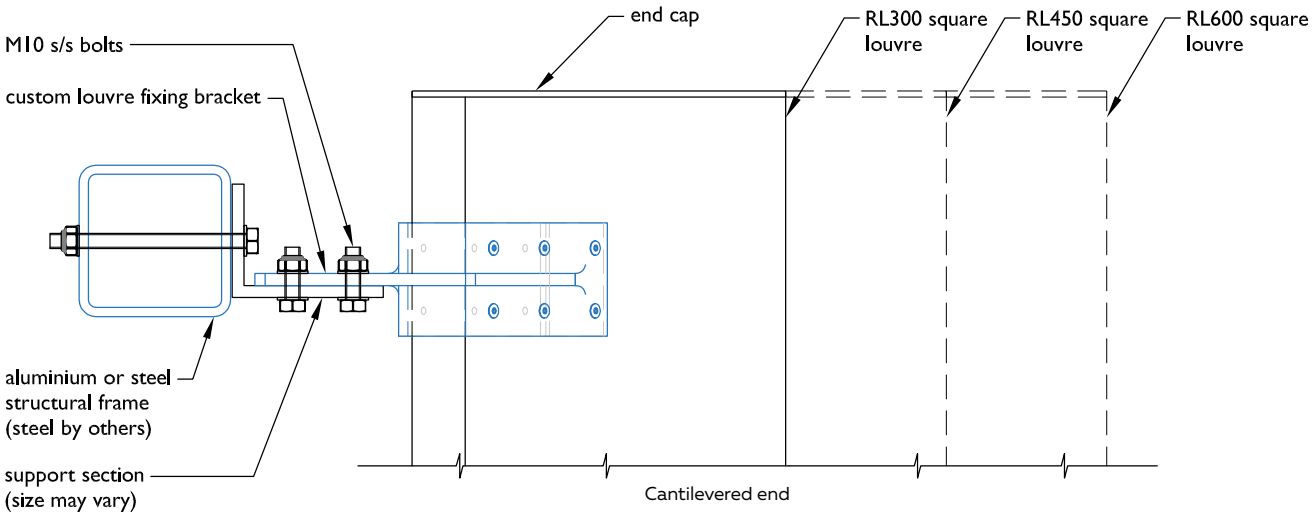


## SECTION - BRACKET FIXED RL 300/450/600 SQUARE LOUVRE

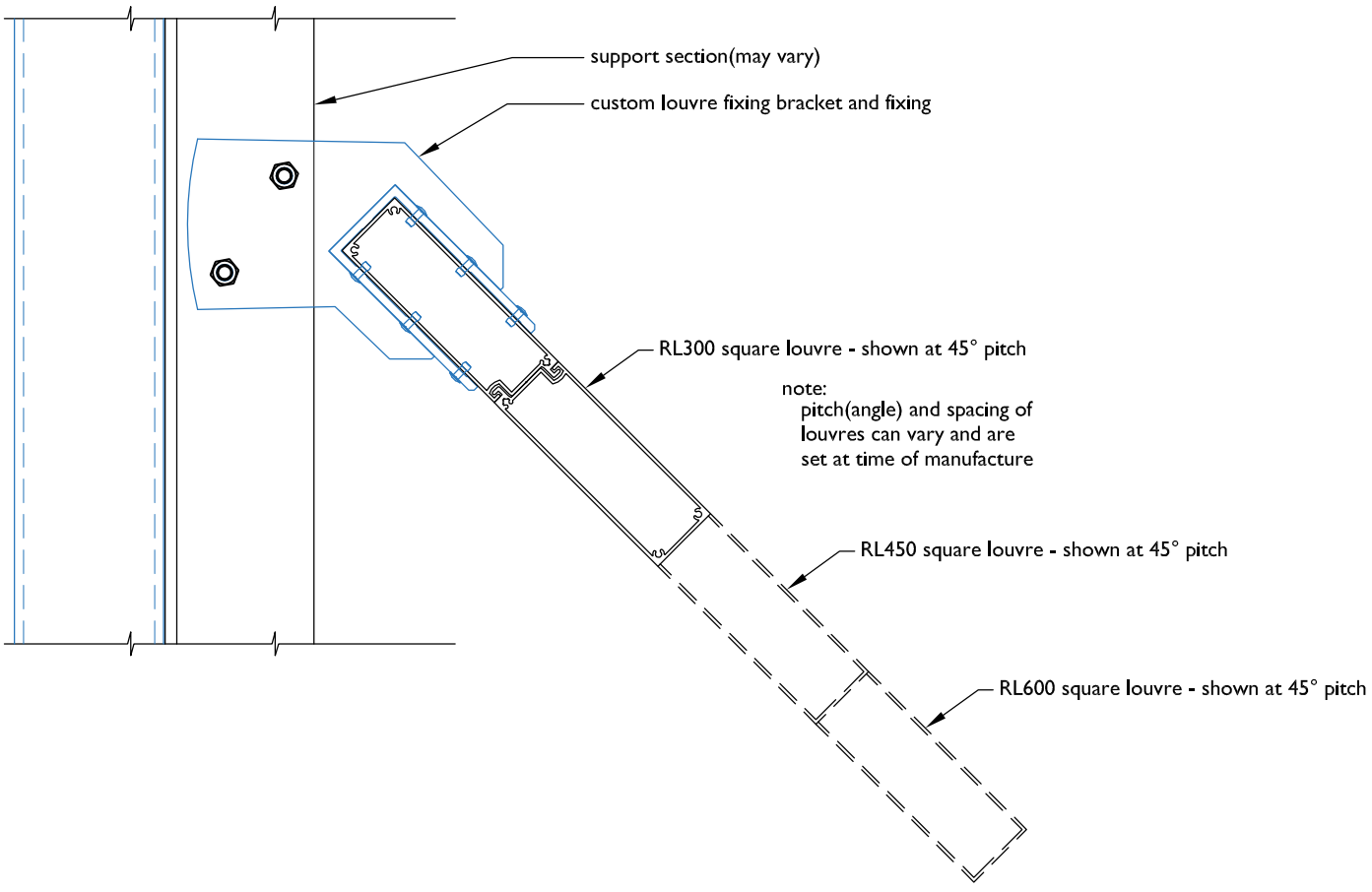




FILE: SUN LOUVRES BRACKET FIXED 10.5.38 DATE MODIFIED: 01/10/2024 SCALE:

www.louvretec.co.nz www.louvretec.com.au

©Louvretec 2025 - All Rights Reserved. Technical specifications subject to change without notice.

# TYPICAL DETAIL: BRACKET FIXED PANELS
# RL300 MITRE, RL450 MITRE, RL600 MITRE LOUVRES

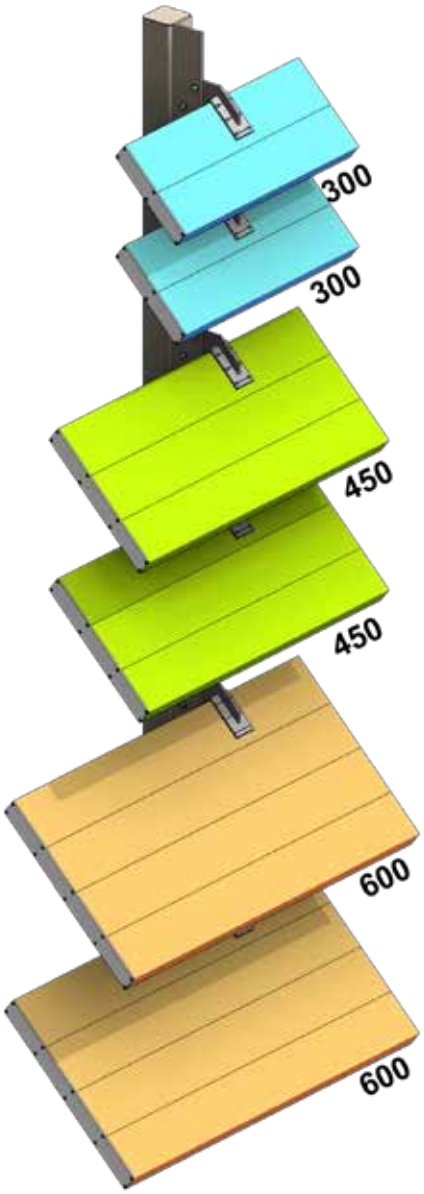

**TYPICAL DETAIL : BRACKET FIXED PANEL**
**RL300 MITRE, RL450 MITRE, RL600 MITRE LOUVRES** (GROUP 7 LOUVRES COLLECTION)

PLAN - BRACKET FIXED RL 300/450/600 MITRE LOUVRE

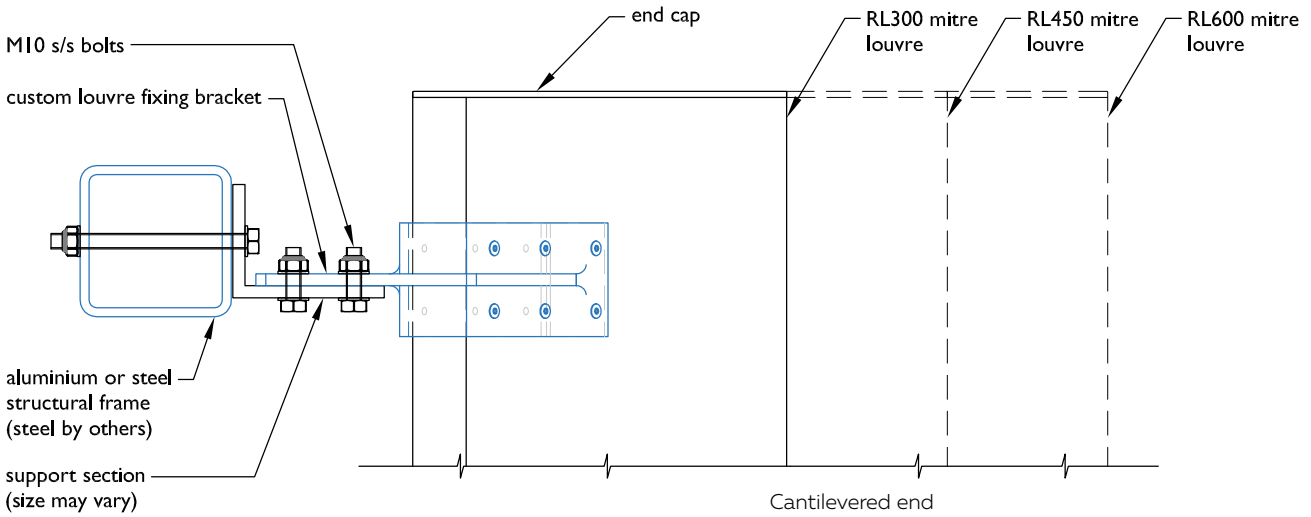


SECTION - BRACKET FIXED RL 300/450/600 MITRE LOUVRE

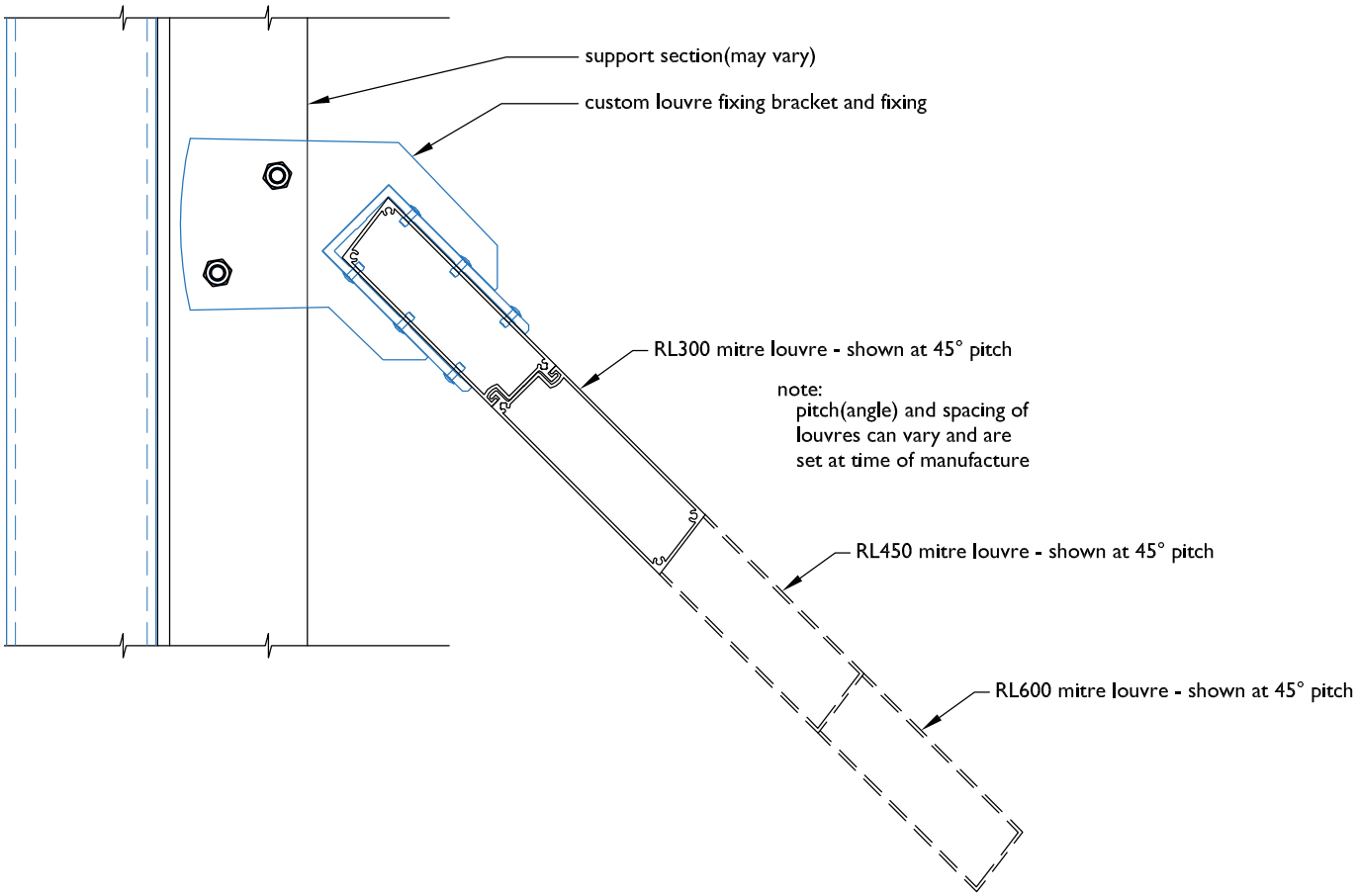



LouvreTec®

©Louvretec 2025 - All Rights Reserved. Technical specifications subject to change without notice.



BRACKET FIXED CHIMNEY SURROUND
WITH MITRED CORNERS



AUCKLAND, NZ

# CHIMNEY SURROUNDS

## The cherry on top

There are many options available when designing louvre chimney surrounds. The actual shape or footprint of the surround is largely dictated by the chimney itself.

Determine what size louvre blade will be best suited, both aesthetically and functionally. Wind flow through the louvre blades can assist with the actual venting of the chimney. The surround's support structure can be a combination of aluminium box section, angle or channel. Please discuss with Louvretec.



BRACKET FIXED CHIMNEY SURROUND WITH
MITRED CORNERS

### SURFACE FINISHING OPTIONS

A wide range of options are available.

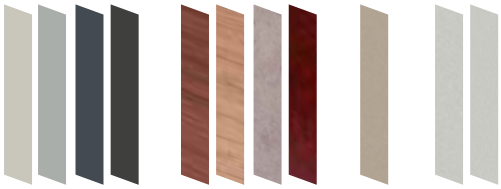

©Louvretec 2025 – All Rights Reserved. Technical specifications subject to change without notice.

## TYPICAL DETAIL: BRACKET FIXED LOUVRE CHIMNEY SURROUND



STANDARD LOUVRE DIRECTION SHOWN

**SECTION**- BRACKET FIXED LOUVRE CHIMNEY SURROUND

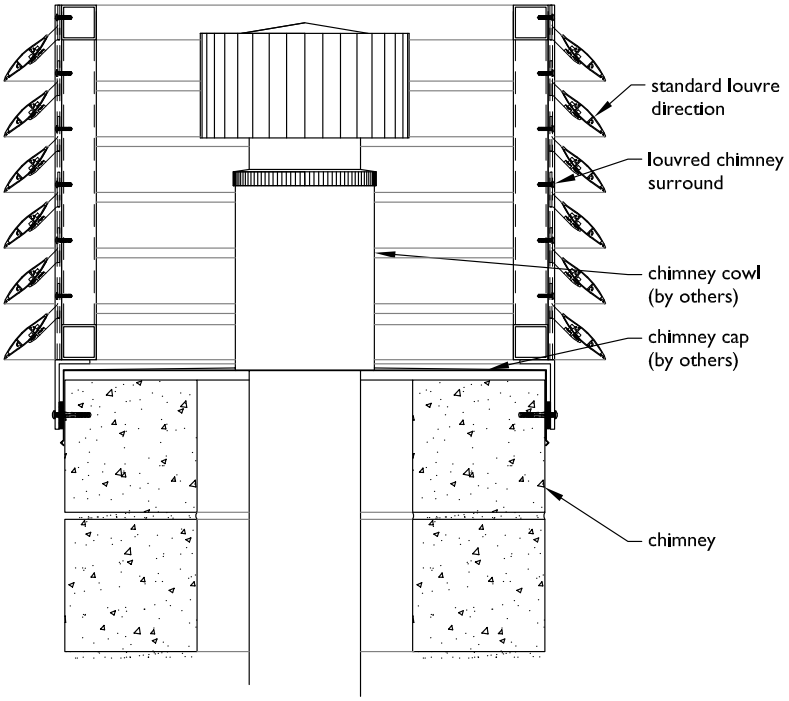


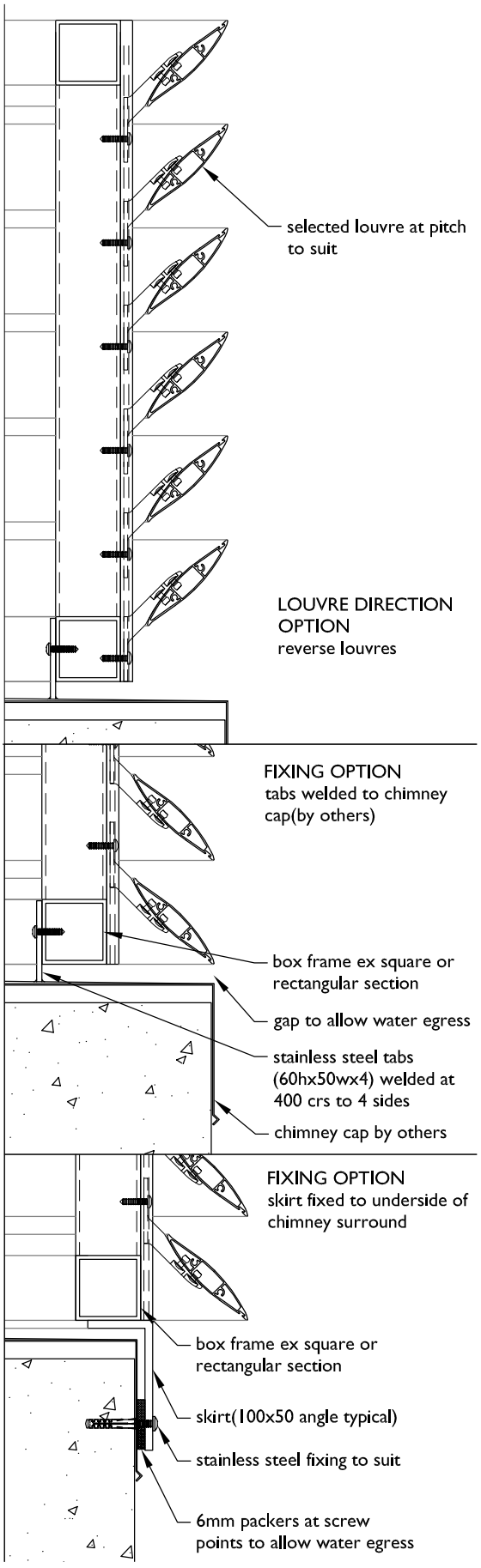




FILE: SUN LOUVRES BRACKET FIXED 10.5.42 DATE MODIFIED: 01/10/2024 SCALE:

www.louvretec.co.nz www.louvretec.com.au

©Louvretec 2025 – All Rights Reserved. Technical specifications subject to change without notice.

**NOTES**

# louvretec retract

Retract Sun Louvres

©Louvretec 2025 – All Rights Reserved. Technical specifications subject to change without notice.

# RETRACT SUN LOUVRES

## Design & Development

Louvretec is continuing with design and development of the Retract Sun Louvres Range.

**Please contact your Louvretec Dealer for further information.**







RETRACT SUN LOUVRES
CONTINUING DEVELOPMENT



©Louvretec 2025 – All Rights Reserved. Technical specifications subject to change without notice.

## NOTES

©Louvretec 2025 – All Rights Reserved. Technical specifications subject to change without notice.

# shutters

By Louvretec


| | |
|---|---|
| Gallery | 12.02 - 12.05 |
| Overview of Shutter Options | 12.06 - 12.09 |
| Louvre Range for Shutters | 12.10 |
| Coastal 120 Top Hung Sliding | 12.11 - 12.13 |
| Coastal 250 Top Hung Sliding | 12.14 - 12.16 |
| Coastal 80 & 200 Bottom Rolling Sliding | 12.17- 12.20 |
| Sliding Shutter Extrusions | 12.21 |
| Bifolding Shutter options | 12.22 - 12.23 |
| Coastal Bifolding 100 Doors | 12.24 - 12.25 |
| Bifolding Shutter Extrusions & Components | 12.26 |
| Hinged Louvre Doors options | 12.27 |
| Standard & Heavy Duty Hinged Doors | 12.28 - 12.30 |
| Ultra Welded Doors & Gates | 12.31 - 12.32 |
| Hinged Shutter Extrusions & Components | 12.33 |
| Hinged Louvre & Plantation Shutters | 12.34 - 12.35 |
| Warranty | 12.36 - 12.37 |


©Louvretec 2025 – All Rights Reserved. Technical specifications subject to change without notice.





©Louvretec 2025 – All Rights Reserved. Technical specifications subject to change without notice.

# COASTAL SERIES ALUMINIUM SHUTTERS




©Louvretec 2025 – All Rights Reserved. Technical specifications subject to change without notice.

# GALLERY **COASTAL SERIES ALUMINIUM SHUTTERS**









1. COASTAL SERIES BIFOLD SHUTTERS CLOSED 2. COASTAL SERIES SLIDING SHUTTERS 3. TWO TONE SHUTTERS 4. COASTAL SERIES SLIDING SHUTTERS



©Louvretec 2025 – All Rights Reserved. Technical specifications subject to change without notice.


5.


6.


7.


8.

5. CABANA 6. OUTDOOR ROOM 7. BESPOKE MOTORISED HINGED SHUTTERS 8. COASTAL SERIES SLIDING SHUTTERS

©Louvretec 2025 – All Rights Reserved. Technical specifications subject to change without notice.

# COASTAL SERIES ALUMINIUM SHUTTERS

## Sliding, Bifolding and Hinged Shutter systems for Doors and Windows

### Ideal for closing in your Louvretec Outdoor Room

Designed to operate in the harshest of conditions, Louvretec's proven Coastal Series Shutters offers a wide range of design options.

Custom made to meet the most demanding design and performance criteria.

All Louvretec Coastal Shutters are manufactured from commercial grade powder coated or anodised aluminium.



SLIDING SHUTTERS, PAUANUI NZ

All Sliding, Bifolding & Hinged componentry have completed extensive corrosion testing and are constructed using 300 series Stainless Steel with componentry die-cast in 316 marine grade.

With Louvretec's extensive range of Louvre shapes and sizes, matched with a range of Door Frames for all Sliding, Bifolding or Hinged installations, Louvretec Coastal Series offers a premium range of Shutters for a wide variety of applications.

## 1. SLIDING DOOR & WINDOW SHUTTERS

### Details at a glance
### Coastal Sliding Louvre Panels

Sliding Louvre Shutters vary considerably from glazed aluminium joinery sliding doors. Glazed aluminium joinery doors generally fit within a 4 sided outer frame with the glass assisting with the bracing of the sliding panel.
Sliding Louvre Shutters generally fit to the outside of the building, deck or within a prepared opening and as such only have Top and Bottom Tracks and guides.





Top Hung Shutters have the advantage of being held captive within the Top Track. A minimal bottom guide only is required.

Bottom Rolling Shutters do not require structural fixing at the head with all the weight being on the Bottom Track. They are easy to operate, particularly with larger doors.

### Top Hung or Bottom Rolling?



TOP HUNG SLIDERS - CARRIAGE WITHIN HEAD TRACK

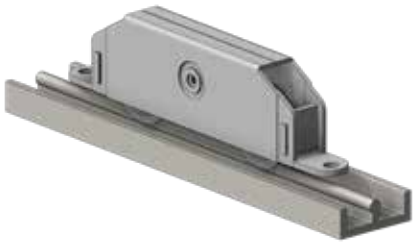

BOTTOM ROLLING SLIDER



©Louvretec 2025 – All Rights Reserved. Technical specifications subject to change without notice.

## 1. SLIDING DOORS & WINDOW SHUTTERS
## Coastal Sliding Louvre Panels (CONTINUED)



WITH MULLION



WITH TRANSOM

For more info refer to:
Coastal Top Hung 120kg Pages 12.11, 12.12, 12.13, 12.21
Coastal Top Hung 250kg Pages 12.14, 12.15, 12.16, 12.21
Coastal Bottom Rolling 80kg Pages 12.17, 12.19, 12.20, 12.21
Coastal Bottom Rolling 200kg Pages 12.18, 12.19, 12.20, 12.21

### Transom

Adjustable louvres provide no lateral bracing for the sliding panel and in most cases for shutters over 1500mm wide a transom is required.

Fixed louvres however provide excellent lateral bracing eliminating the need for a transom.

### Mullion

As generally smaller 90mm - 100mm louvres are used in sliding shutters a mullion may be required in shutters over 1200mm - 1500mm wide in order to meet spanning requirements.

### Shutter Weight

Calculating the weight of a sliding louvered shutter allow 12-14 kg per sqm. This includes louvres, outer frame mullions and transoms if required.

## 2. BIFOLDING SHUTTERS

### Coastal Bifolding Shutter System for Doors and Windows

Louvretec Bifold Doors effortlessly slide open with panels following suit, neatly stacking against the wall.

**Coastal Bifolding 100**
Designed around a maximum panel weight of 100kg



BIFOLD DOOR



BIFOLD WINDOW

### Transom

A Transom is standard on all Coastal Bifolds.

### Shutter Weight

Calculating the weight of a Coastal Bifold Shutter please allow 12-14 kg per sqm. This includes Louvres, Outer Frame Mullions and Transom.

©Louvretec 2025 - All Rights Reserved. Technical specifications subject to change without notice.

## 2. BIFOLDING SHUTTERS
## Coastal Bifolding Shutter System (Continued)

### Top Hung

All Coastal Series Bifolds are Top Hung.

As Multi-Panel Bifold Shutters can load considerable weight to the Top Track suitable fixing at the head is essential. Please contact Louvretec for specific weight loadings.

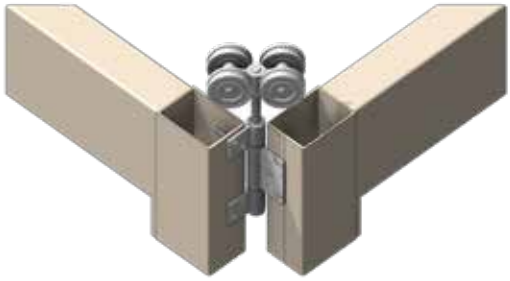

TYPICAL TOP HUNG DETAILS

### Mix & Match

The same Louvre infill operating options that are available to our Coastal Sliding Shutters are available to our Coastal Bifold Shutters. These being the KISS Pivot and End Fixed applications.

For more info refer to:
Coastal Bifolding 100 Pages 12.22 - 12.26

## 3. HINGED DOORS & GATES

### Hinged Louvre Doors

Louvretec Hinged doors are available in a range of three different styles. Choose depending on durability requirements and door size.

Louvretec Hinged doors area available in three distinctive styles:

1. Standard Hinged Doors
   Maximum size 2200mm (h) x 900mm (w)
2. Heavy Duty Hinged Doors
   Maximum size 2500mm (h) x 900mm (w)
3. Ultra Welded Hinged Doors
   Maximum size 3000mm (h) x 1300mm (w)

For more info refer to:
Coastal Standard Hinged Door Pages 12.27, 12.28, 12.30, 12.33
Coastal Heavy Duty Hinged Door Pages 12.27, 12.29, 12.30, 12.33
Coastal Ultra Welded Hinged Door Pages 12.27, 12.31, 12.32, 12.33



HEAVY DUTY HINGED DOOR



©Louvretec 2025 – All Rights Reserved. Technical specifications subject to change without notice.

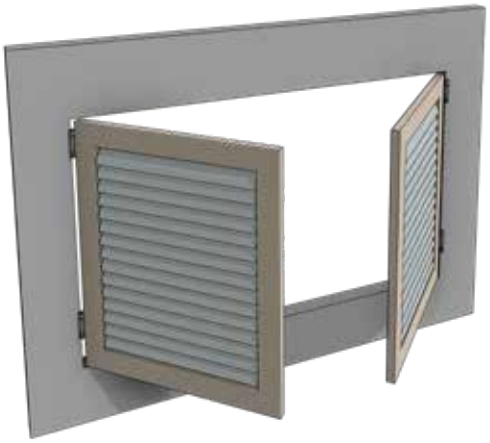

HINGED LOUVRE WINDOWS

## 4. HINGED LOUVRES & PLANTATION/AWNING STYLE SHUTTERS

### Hinged Louvre Windows

Hinged Louvered Windows use standard Hinged Door extrusions and components.

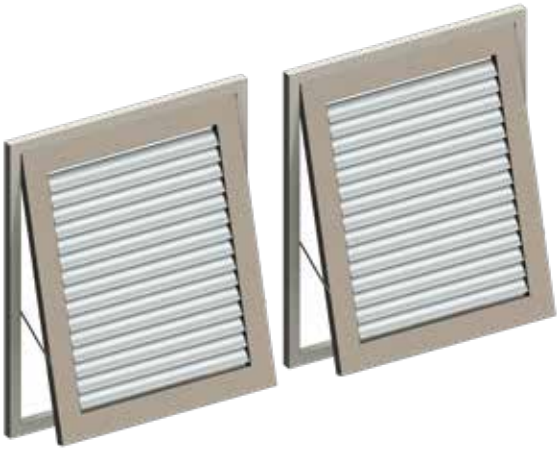

PLANTATION/AWNING STYLE SHUTTERS

### Plantation/Awning Shutters

Plantation Shutters use standard hinged door extrusions and components.

For more info refer to:
Coastal Hinged Louvres & Plantation Shutters
Pages 12.34 & 12.35

## YOUR CHOICE OF LOUVRE INFILL APPLICATION

### 1. The KISS Pivot System - For Hand operable Louvre Infills

For more info refer to:
KISS Pivot System Pages 10.1.03

### 2. End Fixed Louvre Infills

For more info refer to:
End Fixed Louvres Pages 10.4.06 - 10.4.07



HAND OPERABLE LOUVRE INFILLS USING THE KISS PIVOT SYSTEM



END FIXED LOUVRE INFILLS

©Louvretec 2025 – All Rights Reserved. Technical specifications subject to change without notice.

# COASTAL SHUTTERS LOUVRE INFILL OPTIONS

## Louvre Infills can be Hand Adjustable or End Fixed

### Hand Operable Shutter Infills; KISS Pivot System

The upgraded KISS Pivot System operates by the use of Double Drive Arms that sit flush against the frame when the Louvres are closed.

For added strength the flush fixed Slide-Lock sits within the Louvre Blade and features a Marine Grade Stainless Steel locking pin.

Select from a choice of 4 louvre blades:

- 90mm Midi
- 150mm Midi
- 95mm Bella Vista
- 95mm Bella Vista Heavy



90MM MIDI



150MM MIDI



95 BELLA VISTA



95 BELLA VISTA HEAVY




HAND OPERABLE SHUTTER INFILLS
KISS PIVOT SYSTEM

### End Fixed

All of the KISS Pivot Louvre Blades shown above & listed below can be End Fixed:

- 90mm Midi
- 150mm Midi
- 95mm Bella Vista
- 95mm Bella Vista Heavy

As well as the following larger sized Louvre Blades:



120 AIRFOIL



125 WEATHERBOARD



150 HELENA BAY



END FIXED LOUVRE SHUTTER



©Louvretec 2025 – All Rights Reserved. Technical specifications subject to change without notice.



TOP HUNG SLIDING SHUTTERS

# COASTAL 120 TOP HUNG SLIDING SHUTTER & WINDOW

## External Shutter Systems

Coastal 120 Sliders are designed for top hung sliding shutter doors and windows weighing up to a maximum finished panel weight of 120kg.

Typically allow between 12kg - 14kg per sqm when calculating weight of slider.

Contact Louvretec regarding structural design of panel.



COASTAL 120 TOP HUNG SLIDING SHUTTER



COASTAL 120 TOP HUNG SLIDING WINDOW




GUIDELINES AT A GLANCE - MAXIMUM PANEL SIZES

©Louvretec 2025 - All Rights Reserved. Technical specifications subject to change without notice.

END FIXED 90MM

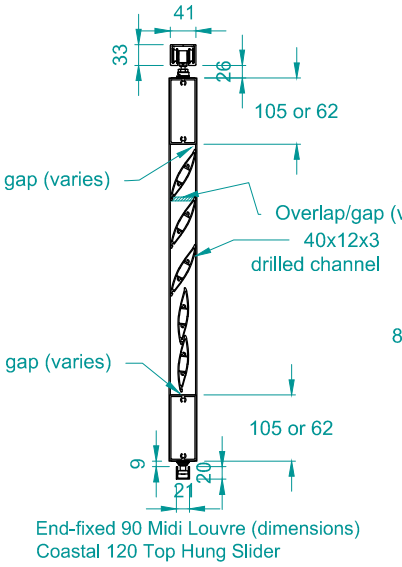


End-fixed 90 Midi Louvre (dimensions)
Coastal 120 Top Hung Slider

KISS PIVOT SYSTEM 90MM

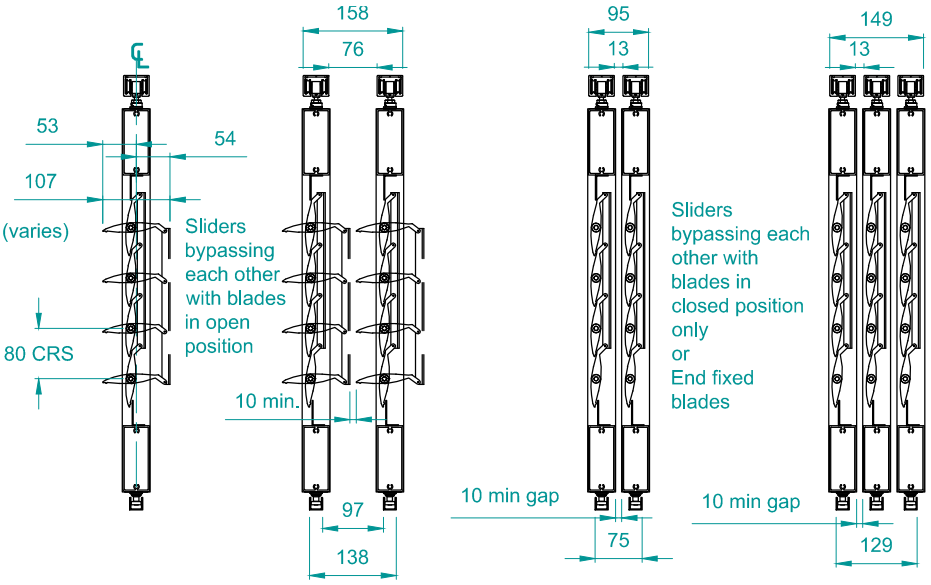


END FIXED 150MM

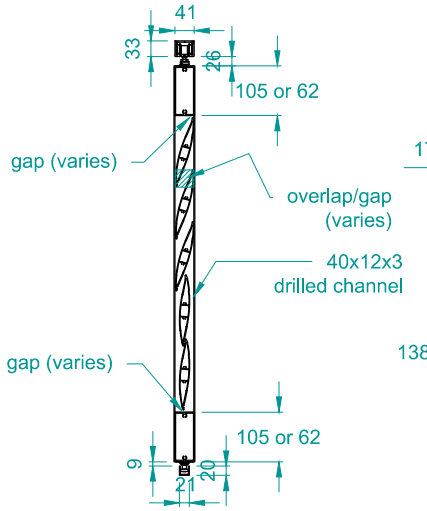


End-fixed 150 Midi Louvre (dimensions)
Coastal 120 Top Hung Slider

KISS PIVOT SYSTEM 150MM

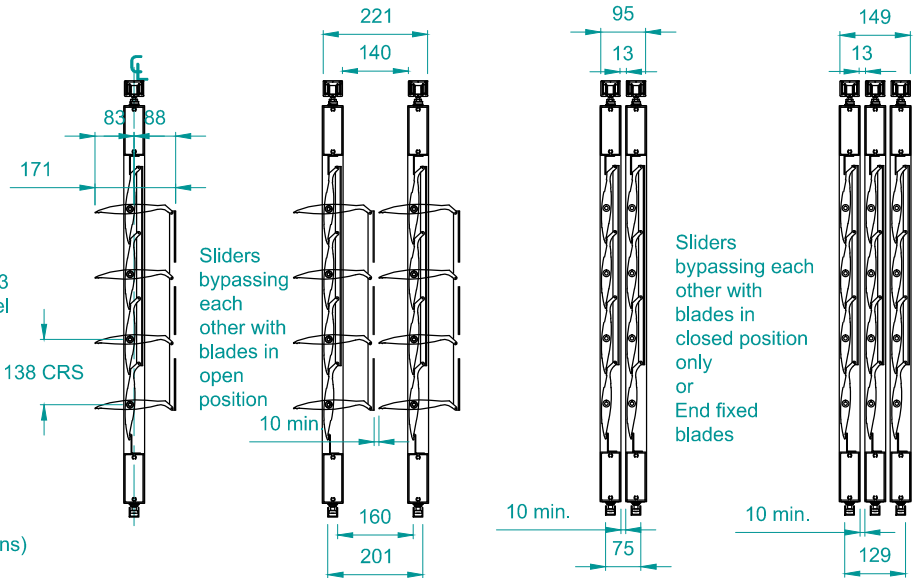




FILE: SHUTTERS 12.12

DATE MODIFIED: 01/10/2024 SCALE:

www.louvretec.co.nz www.louvretec.com.au

©Louvretec 2025 - All Rights Reserved. Technical specifications subject to change without notice.

## END FIXED 95MM BELLA VISTA

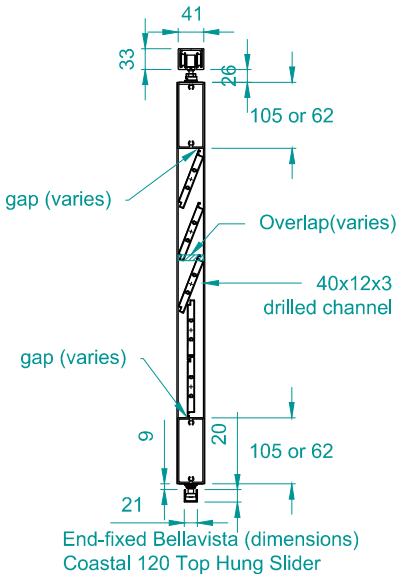


## KISS PIVOT SYSTEM 95MM BELLA VISTA

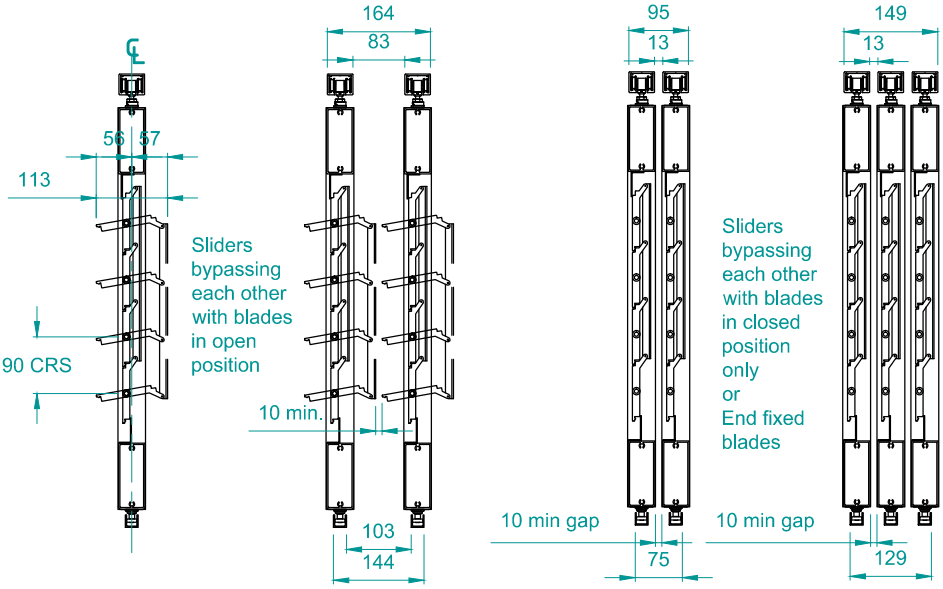


## END FIXED 95MM BELLA VISTA HEAVY

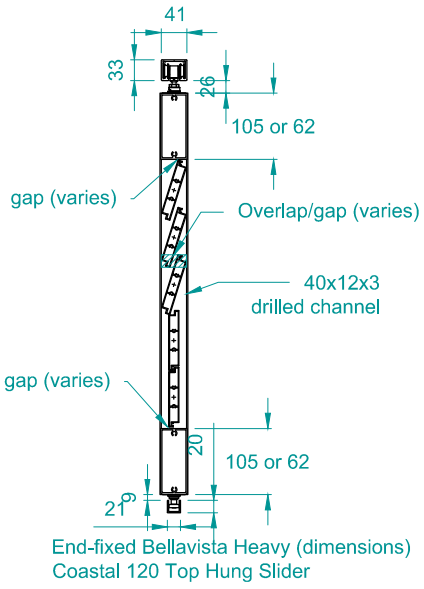


## KISS PIVOT SYSTEM 95MM BELLA VISTA HEAVY

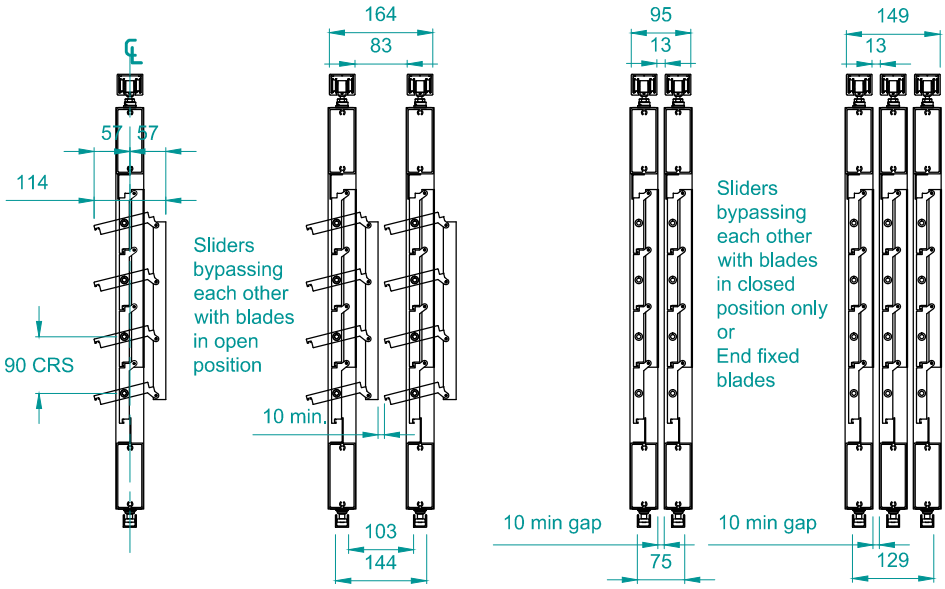



©Louvretec 2025 – All Rights Reserved. Technical specifications subject to change without notice.

# COASTAL 250 TOP HUNG SLIDING SHUTTER & WINDOW

## External Shutters

Heavy Duty Coastal 250 sliders are designed for top hung sliding windows and doors weighing up to a maximum finished panel weight of 250kg.

Typically allow between 12kg-14kg per sqm when calculating weight of slider. Larger panel sliders may require additional mullion and be subject to approved engineering to suit wind zone. Contact Louvretec regarding structural design of panel.



TAKAPUNA, NZ



COASTAL 250 TOP HUNG SLIDING SHUTTER



COASTAL 250 TOP HUNG TWO PANEL SLIDER

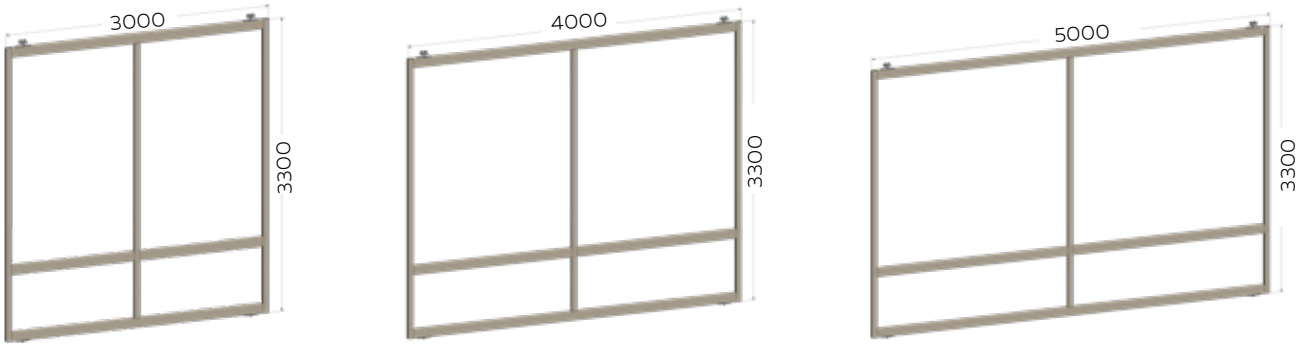


GUIDELINES AT A GLANCE - MAXIMUM PANEL SIZES



©Louvretec 2025 – All Rights Reserved. Technical specifications subject to change without notice.

## END FIXED 90MM

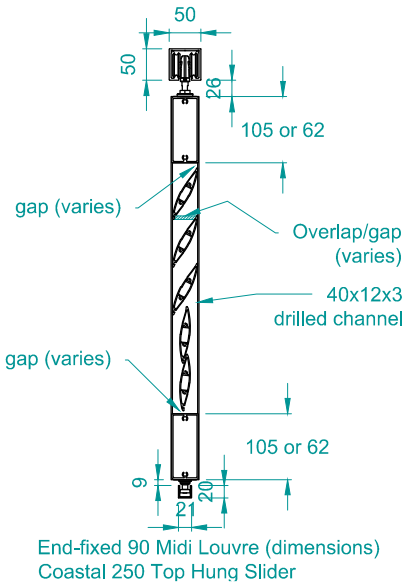


End-fixed 90 Midi Louvre (dimensions)
Coastal 250 Top Hung Slider

## KISS PIVOT SYSTEM 90MM

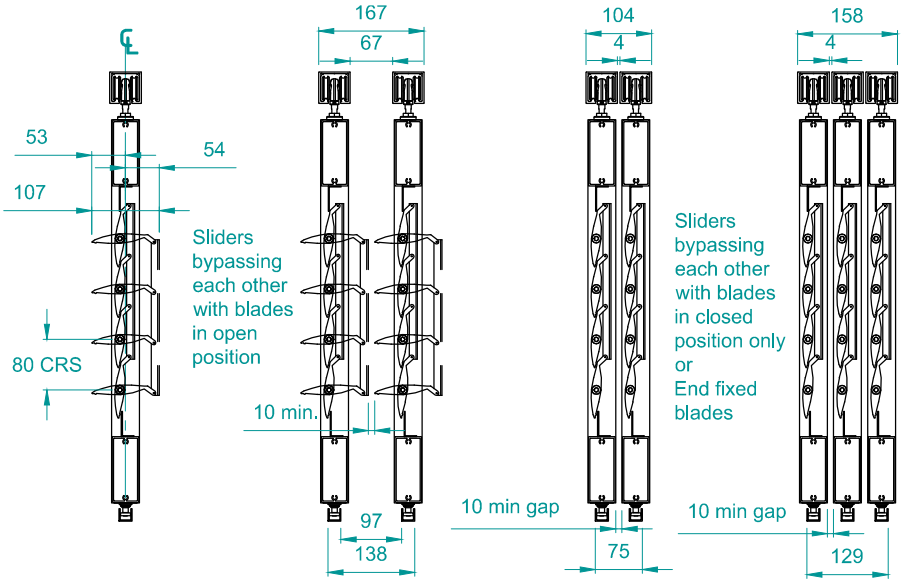


## END FIXED 150MM

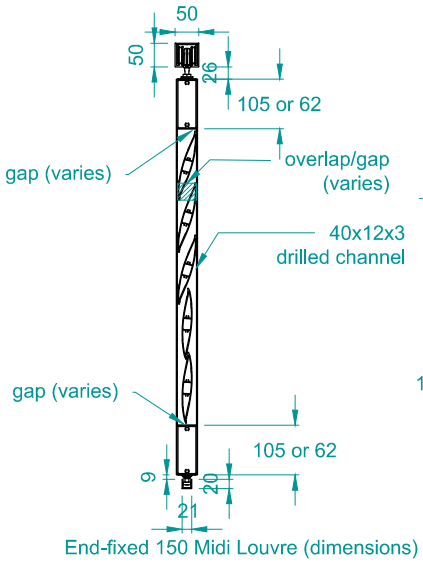


End-fixed 150 Midi Louvre (dimensions)
Coastal 250 Top Hung Slider

## KISS PIVOT SYSTEM 150MM

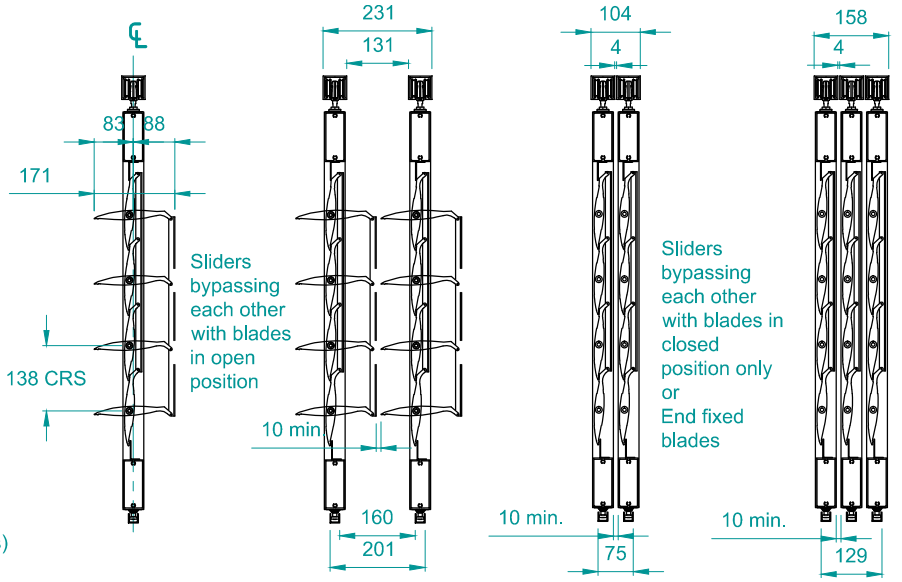



©Louvretec 2025 – All Rights Reserved. Technical specifications subject to change without notice.

END FIXED 95MM BELLA VISTA

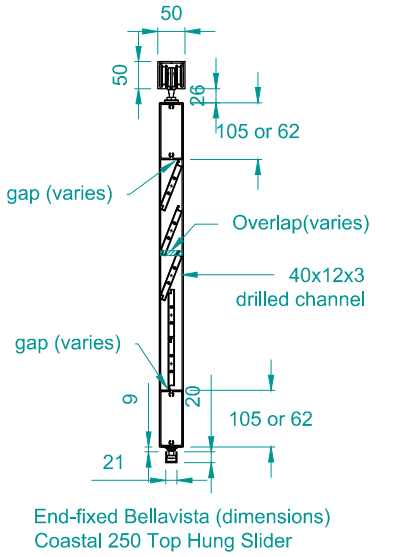


End-fixed Bellavista (dimensions)
Coastal 250 Top Hung Slider

KISS PIVOT 95MM BELLA VISTA

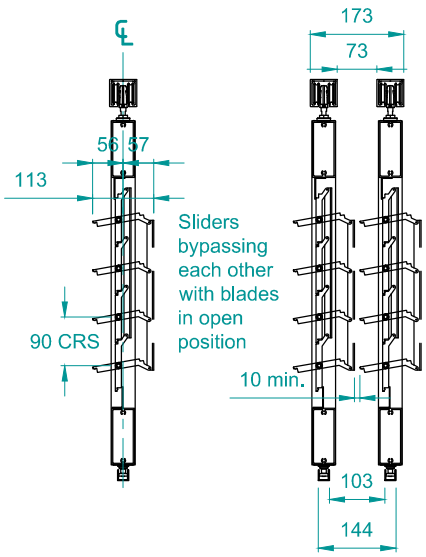


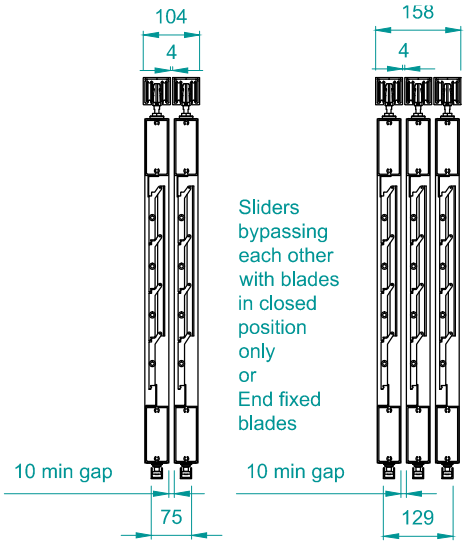


END FIXED 95MM BELLA VISTA HEAVY

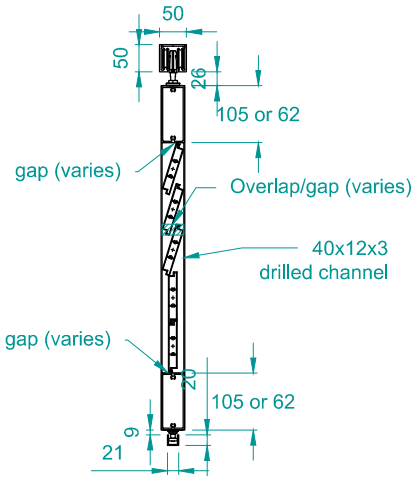


End-fixed Bellavista Heavy (dimensions)
Coastal 250 Top Hung Slider

KISS PIVOT SYSTEM 95MM BELLA VISTA HEAVY

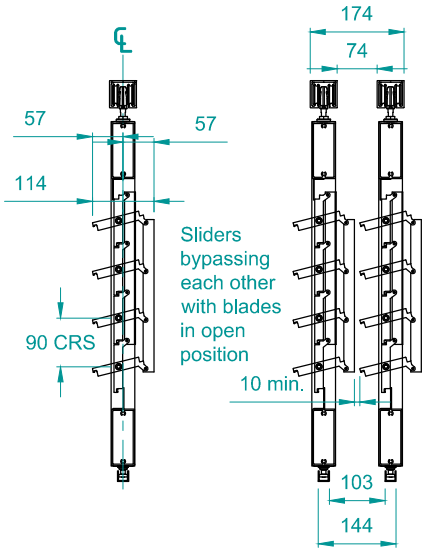


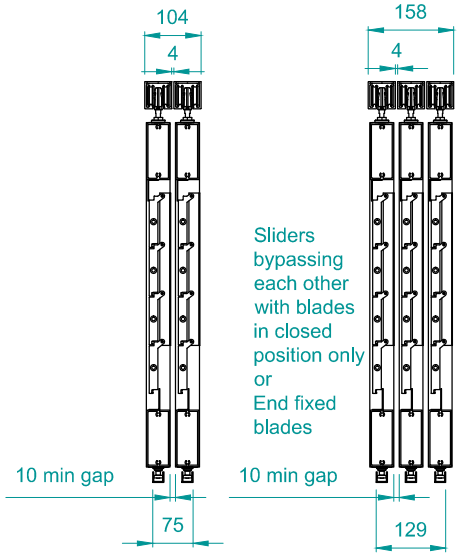




FILE: SHUTTERS 12.16

DATE MODIFIED: 01/10/2024 SCALE:

www.louvretec.co.nz www.louvretec.com.au

©Louvretec 2025 – All Rights Reserved. Technical specifications subject to change without notice.





AUCKLAND, NZ

# COASTAL 80 BOTTOM ROLLING SLIDING SHUTTERS

## External Shutter Systems

Coastal 80 sliders are designed for bottom rolling windows and doors with a maximum finished panel weight of 80kg.

Typically allow between 12kg-14kg per sqm when calculating weight of slider.

Contact Louvretec regarding structural design of panel.



COASTAL 80 BOTTOM ROLLING SLIDING SHUTTER



COASTAL 80 BOTTOM ROLLING 3 PANEL SLIDING WINDOW

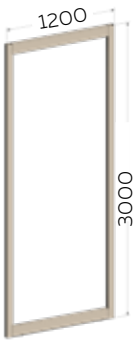





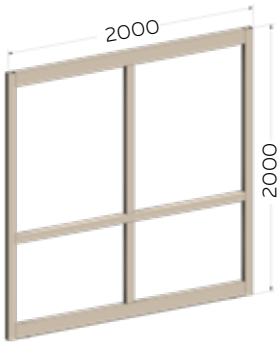


GUIDELINES AT A GLANCE - MAXIMUM PANEL SIZES

©Louvretec 2025 - All Rights Reserved. Technical specifications subject to change without notice.

# COASTAL 200 BOTTOM ROLLING SLIDING SHUTTER

## External Shutters

Heavy duty Coastal 200 sliders are designed for bottom rolling sliding windows and doors weighing up to a maximum finished panel weight of 200kg.

Typically allow between 12kg-14 kg per sqm when calculating weight of slider. Larger panel sliders may require additional mullion and be subject to approved engineering to suit wind zone. Contact Louvretec regarding structural design of panel.



SLIDING SHUTTER INFILLS

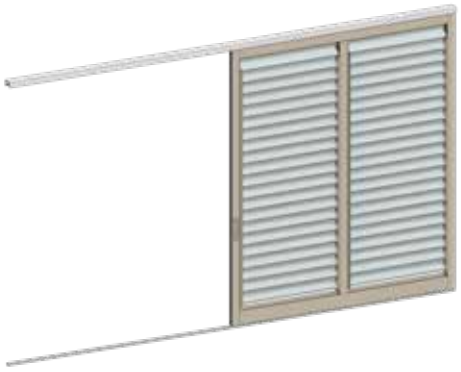

COASTAL 200 BOTTOM ROLLING SLIDING SHUTTER



COASTAL 200 BOTTOM ROLLING TWO PANEL SLIDING SHUTTER

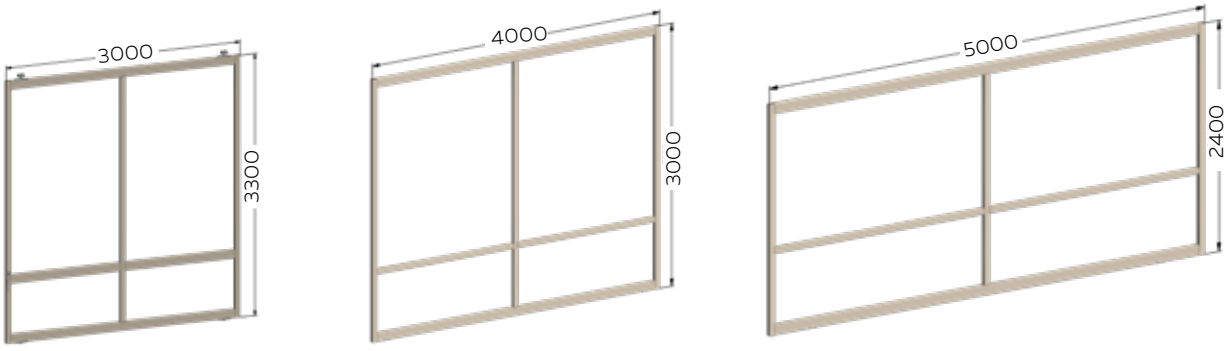


GUIDELINES AT A GLANCE - MAXIMUM PANEL SIZES



©Louvretec 2025 – All Rights Reserved. Technical specifications subject to change without notice.

## END FIXED 90MM

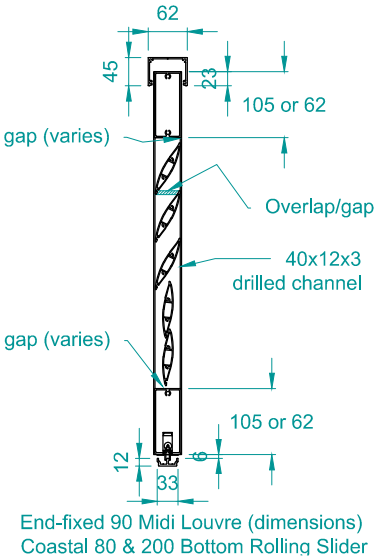


End-fixed 90 Midi Louvre (dimensions)
Coastal 80 & 200 Bottom Rolling Slider

## KISS PIVOT SYSTEM 90MM

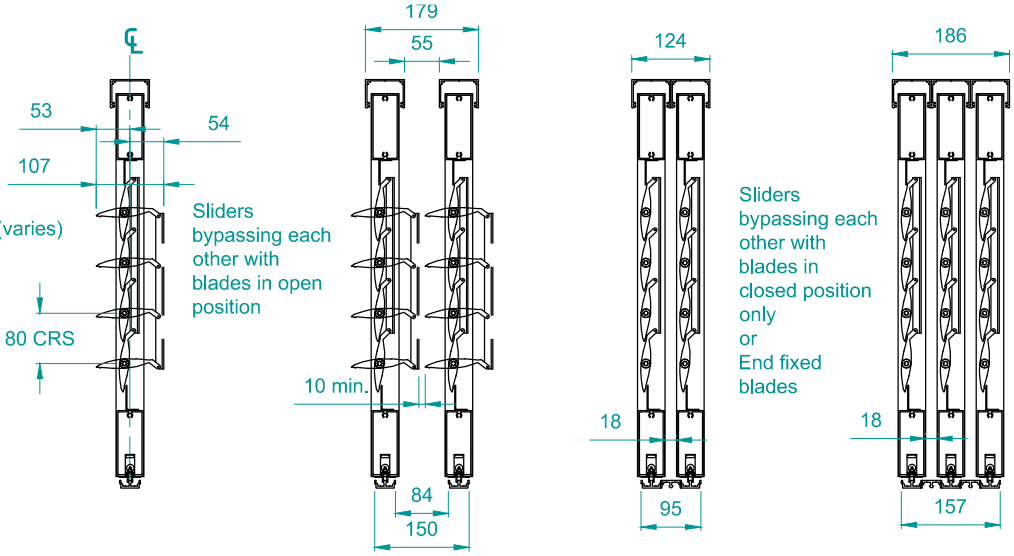


## END FIXED 150MM

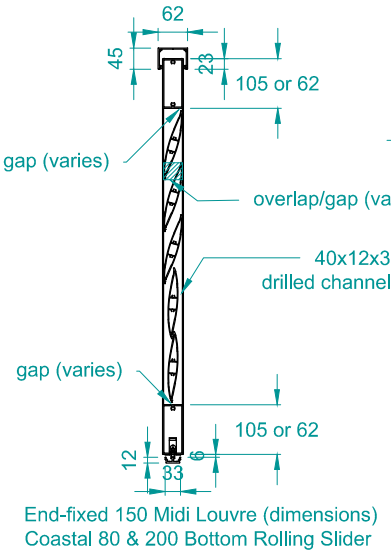


End-fixed 150 Midi Louvre (dimensions)
Coastal 80 & 200 Bottom Rolling Slider

## KISS PIVOT SYSTEM 150MM

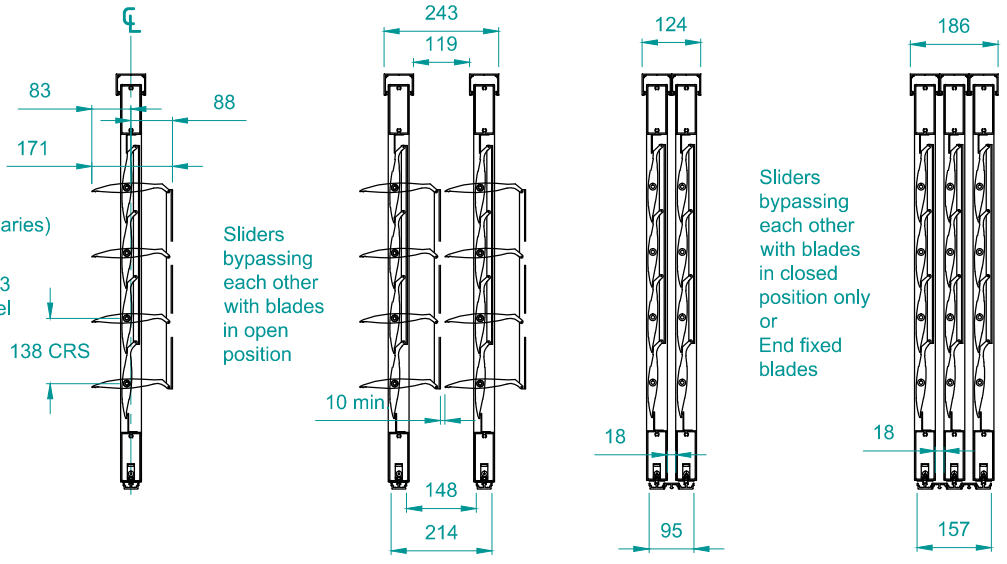



©Louvretec 2025 – All Rights Reserved. Technical specifications subject to change without notice.

## TYPICAL DETAIL : COASTAL 80 AND 200 BOTTOM ROLLING DOORS AND WINDOWS

END FIXED 95MM BELLA VISTA

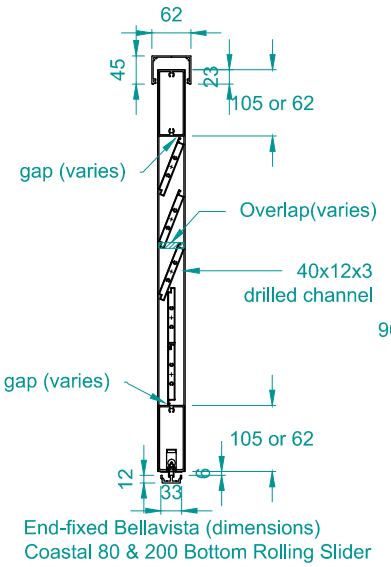


End-fixed Bellavista (dimensions)
Coastal 80 & 200 Bottom Rolling Slider

KISS PIVOT SYSTEM 95MM BELLA VISTA

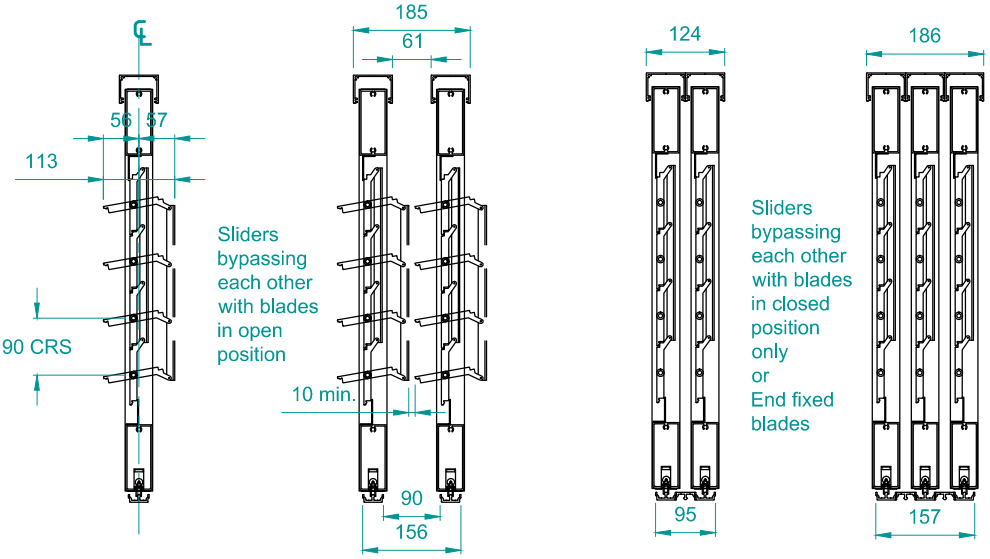


END FIXED 95MM BELLA VISTA HEAVY

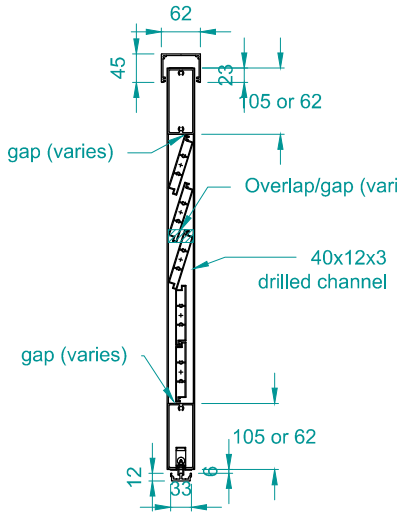


End-fixed Bellavista Heavy (dimensions)
Coastal 80 & 200 Bottom Rolling Slider

KISS PIVOT SYSTEM 95MM BELLA VISTA HEAVY

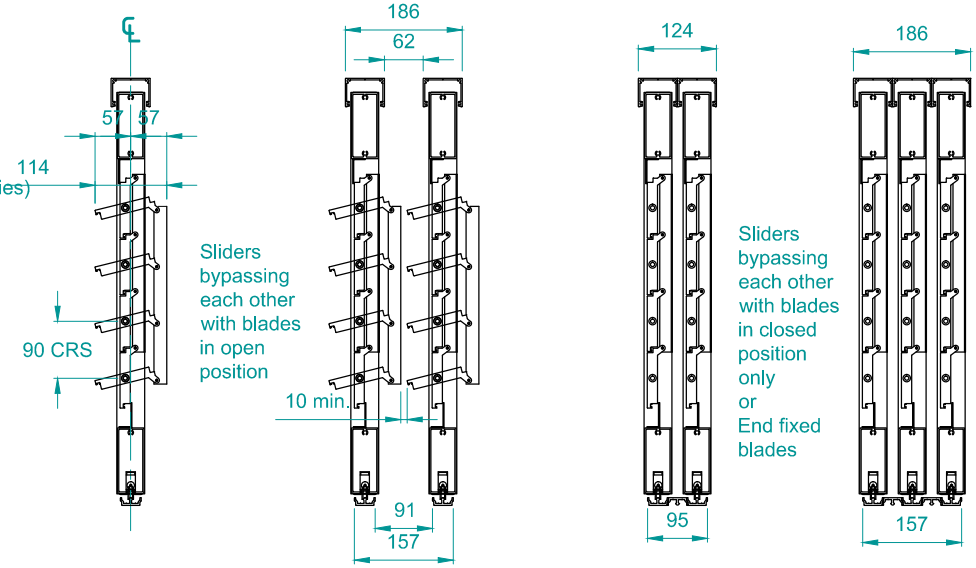




FILE: SHUTTERS 12.20

DATE MODIFIED: 01/10/2024 SCALE:

www.louvretec.co.nz www.louvretec.com.au

©Louvretec 2025 - All Rights Reserved. Technical specifications subject to change without notice.

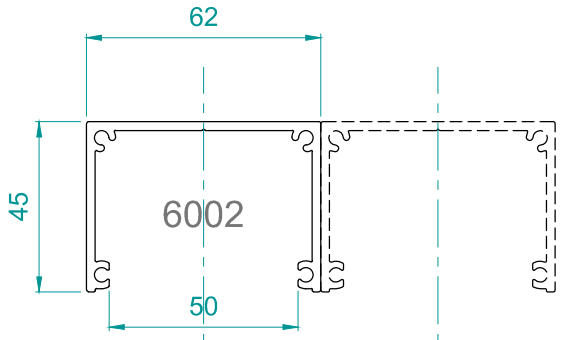


bottom rolling coastal 80/200
head track

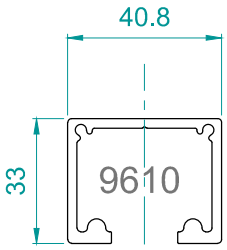


top hung coastal 120
top track

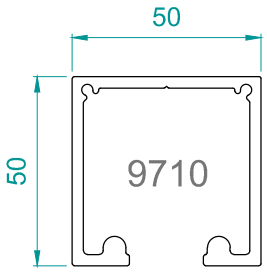


top hung coastal 250
top track

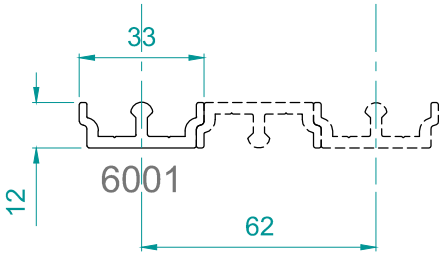


bottom rolling coastal 80/200
bottom tracks

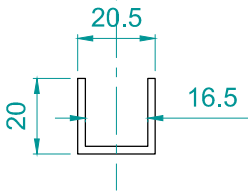


top hung coastal 250/120
bottom guide

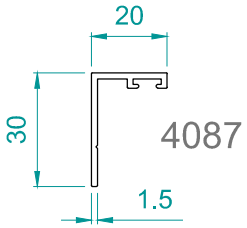


mohair closing angle

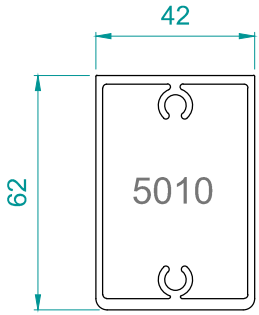


top & bottom rail

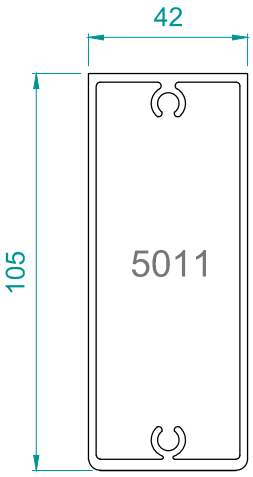


top & bottom rail(large)

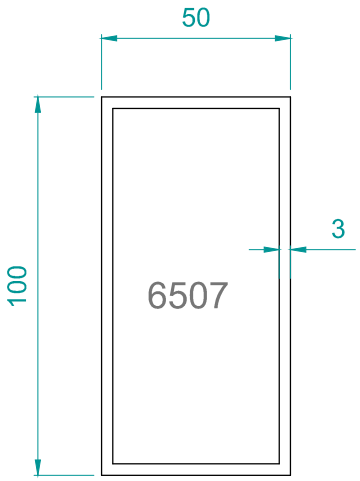


100x50x3 box

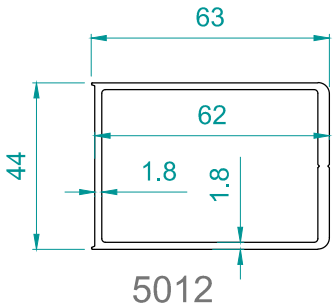


Standard stile

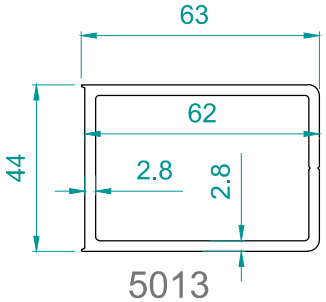


heavy duty stile


©Louvretec 2025 – All Rights Reserved. Technical specifications subject to change without notice.

# COASTAL BIFOLDING 100 SHUTTER SYSTEM

## Bifolding Shutter System for Doors & Windows

Louvretec Bifold Doors effortlessly slide open with panels following suit, neatly stacking against the wall

## Coastal Bifolding 100

Designed around a maximum panel weight of 100kg

## Top Hung

All Coastal Series bifolds are top hung.

As multi-panel bifolds can load considerable weight to the top track suitable fixing at the head is essential - please contact Louvretec for specific weight loadings.

## Transom

A transom is standard on all Coastal Bifolds.

## Shutter Weight

Calculating the weight of a bifolding louvered shutter allow 12-14 kg per sqm. This includes louvres, outer frame mullions and transom.

## Mix & Match

The same options that are available to our sliding shutters are available to our bifold shutters - these being the KISS Pivot and End Fixed.



BIFOLDING DOORS, BAY OF PLENTY, NZ



BIFOLDING DOORS, AUCKLAND, NZ



TYPICAL TOP HUNG DETAILS



TWO PANEL BIFOLD DOORS



FOUR PANEL BIFOLD DOORS



©Louvretec 2025 – All Rights Reserved. Technical specifications subject to change without notice.

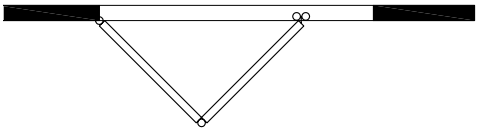

TWO PANEL BIFOLD

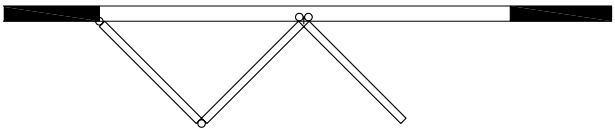

THREE PANEL BIFOLD
SLIDING TO ONE SIDE

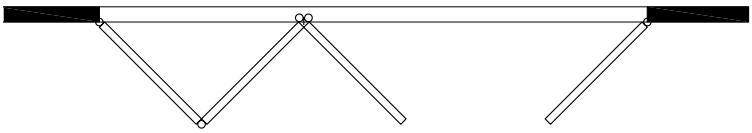

THREE PANEL BIFOLD
ONE PANEL HINGED

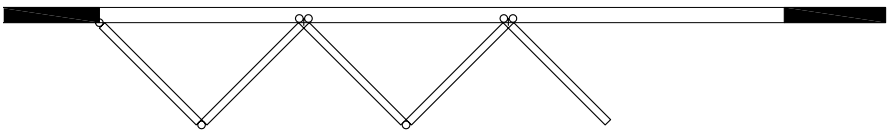

ODD NUMBER OF
BIFOLD PANELS
SLIDING TO ONE SIDE

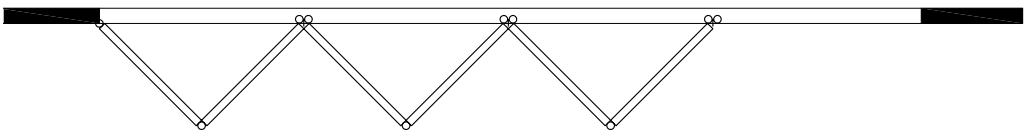

EVEN NUMBER OF
BIFOLD PANELS
SLIDING TO ONE SIDE

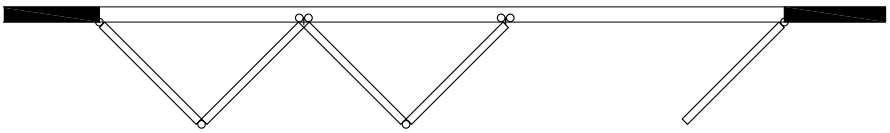

ODD NUMBER OF BIFOLD
PANELS
ONE PANEL HINGED



OTHER POSSIBLE
CONFIGURATIONS
ARE POSSIBLE BASED
ON THESE OPTIONS

**NOTES**:
MAXIMUM LEAF WEIGHT 100KG
MAXIMUM LEAF WIDTH 900MM
MAXIMUM LEAF HEIGHT 3300MM


©Louvretec 2025 – All Rights Reserved. Technical specifications subject to change without notice.

# COASTAL BIFOLDING 100 DOORS

## External Shutters

Coastal Bifolding 100 Shutters are designed for windows and door panels weighing up to a maximum finished panel weight of up to 100kg.

Typically allow 12-14kg per sqm when calculating weight of a Bifold panel.

Maximum panel size 3300mm (h) x 900mm (w)



NORTHLAND, NZ



COASTAL 100:  4 PANEL BIFOLDING DOOR WITH 90MM LOUVRE INFILLS

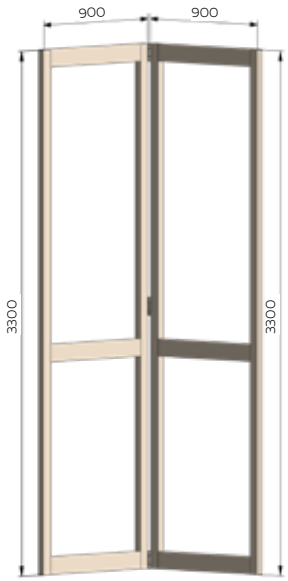


MAXIMUM PANEL SIZE: 3300X900
MAXIMUM PANEL WEIGHT:  100KGS



©Louvretec 2025 – All Rights Reserved. Technical specifications subject to change without notice.

## 90MM KISS PIVOT & END FIXED

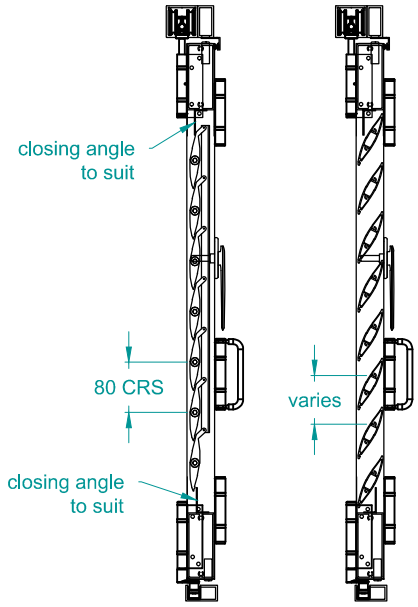


kiss pivot 90mm

end fixed 90mm

## 150MM KISS PIVOT & END FIXED

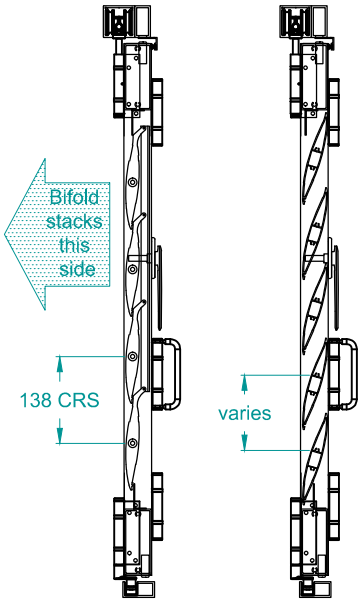


kiss pivot 150mm

end fixed 150mm

## 95MM BELLA VISTA KISS PIVOT & END FIXED

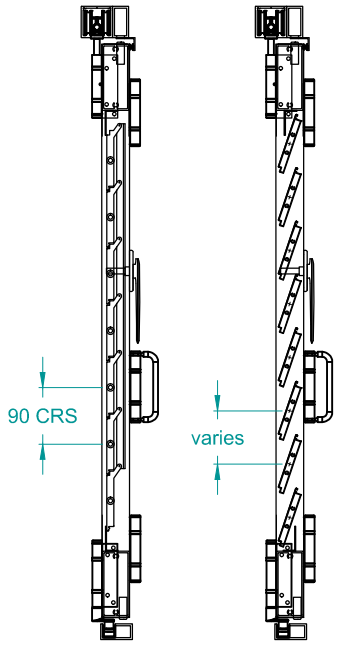


kiss pivot Bella Vista

end fixed Bella Vista

## 95MM BELLA VISTA HEAVY KISS PIVOT & END FIXED

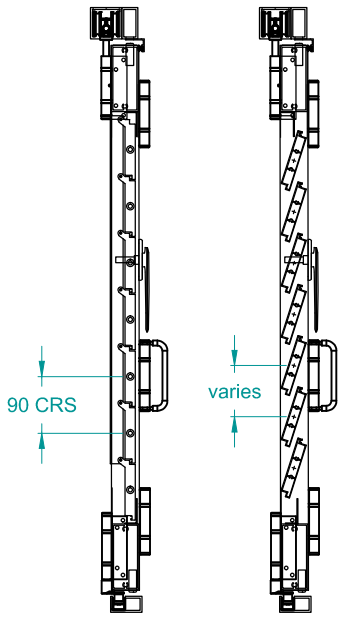


kiss pivot Bella Vista heavy

end fixed Bella Vista heavy


©Louvretec 2025 – All Rights Reserved. Technical specifications subject to change without notice.

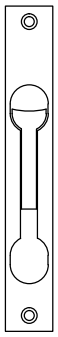

9920
flush bolt lever
surface mounted



9704
magnetic
hold back
catch SS
pair

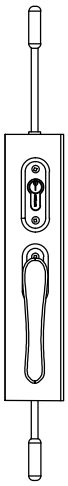

9932
twin bolt

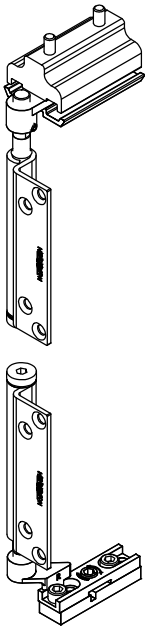

9700
coastal 100
pivot set

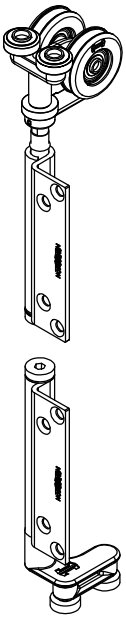

9703
coastal 100
end hanger
LH

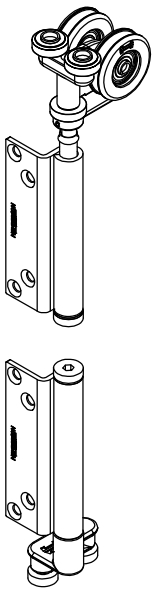

9703
coastal 100
end hanger
RH

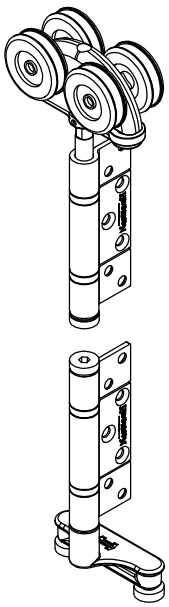

9701
coastal 100
intermediate
hanger set

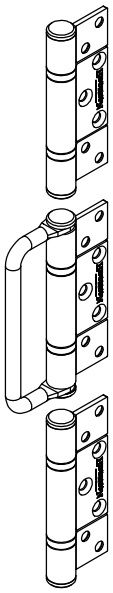

9702
hinge set
with d
handle

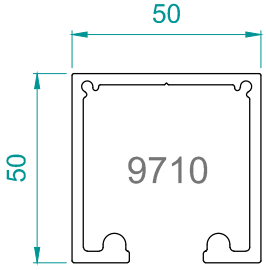


coastal 250 top track
coastal 100 bifold top track

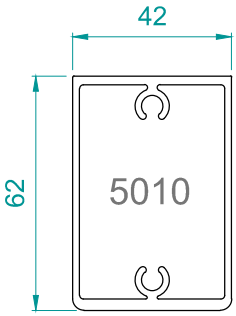


top & bottom rail

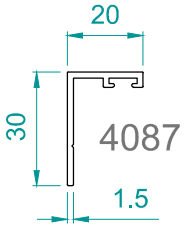


mohair closing
angle

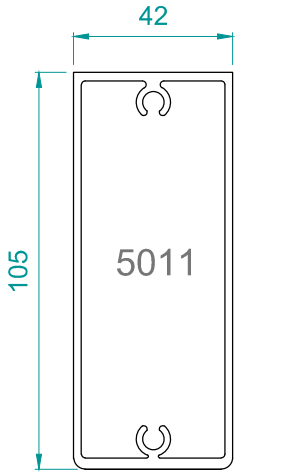


top & bottom rail(large)

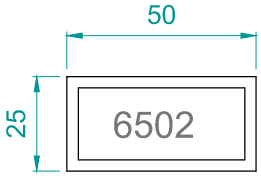


50X25X3 box

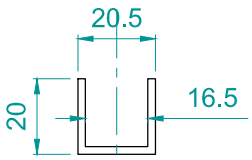


9711
120 coastal
channel guide

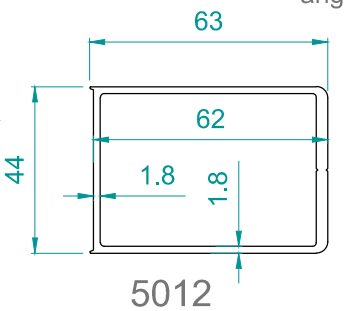


5012
Standard stile

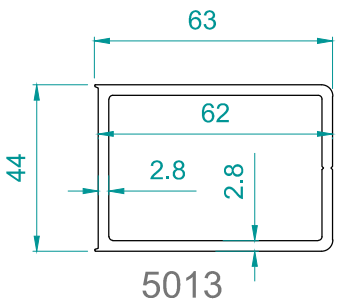


5013
heavy duty stile



FILE: SHUTTERS 12.26

DATE MODIFIED: 01/10/2024 SCALE:

www.louvretec.co.nz www.louvretec.com.au

©Louvretec 2025 - All Rights Reserved. Technical specifications subject to change without notice.

# HINGED LOUVRE DOORS

## For Doors & Windows: Details at a glance

Louvretec Hinged doors are available in a range of three different styles. Choose depending on durability requirements and door size.

### Hinged Louvre Doors

Louvretec Hinged doors area available in three distinctive styles:




1. STANDARD HINGED DOOR

**1. Standard Hinged Doors**
Maximum sizes 2200mm (h) x 900mm (w)
Refer to 12.28 & 12.30 for more info.



2. HEAVY DUTY HINGED DOOR

**2. Heavy Duty Hinged Doors**
Maximum sizes 2500mm (h) x 900mm (w)
Refer to 12.29 & 12.30 for more info.



3. ULTRA WELDED HINGED DOOR

**3. Ultra Welded Hinged Doors**
Maximum sizes 3000mm (h) x 1300mm (w)
Refer to 12.31 & 12.32 for more info.

©Louvretec 2025 – All Rights Reserved. Technical specifications subject to change without notice.

# 1. STANDARD HINGED DOORS

## External Shutters

Standard Hinged Doors are designed for a maximum panel size of 2200mm (h) x 900mm (w).

Heavy Duty 105mm top and bottom rails are used with both fixed and adjustable louvre infills. A transom is required for all adjustable louvre infills.

Available in one panel and two panel French Door configurations.



HINGED DOORS & PEDESTRIAN GATE




STANDARD HINGED DOOR

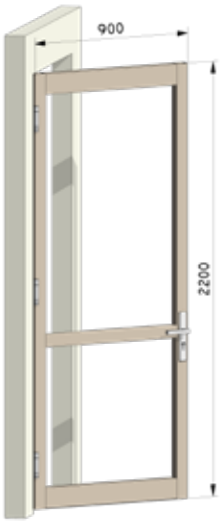


STANDARD HINGED DOOR
RECOMMENDED MAX SIZES



©Louvretec 2025 – All Rights Reserved. Technical specifications subject to change without notice.

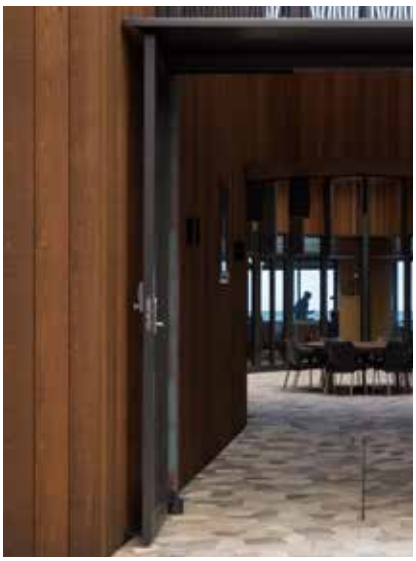

OREWA BEACH, NZ

# 2. HEAVY DUTY HINGED DOORS

## External Shutter Systems

Standard Hinged Doors are designed for a maximum panel size of 2500mm (h) x 900mm (w).

Heavy Duty 105mm x 44mm top and bottom rails are used with both fixed and adjustable louvre infills. A transom is required for all adjustable louvre infills.

Available in one panel and two panel French Door configurations.



HEAVY DUTY HINGED DOOR




HEAVY DUTY HINGED DOOR
RECOMMENDED MAXIMUM SIZE

©Louvretec 2025 – All Rights Reserved. Technical specifications subject to change without notice.

## TYPICAL DETAIL : COASTAL SERIES STANDARD & HEAVY DUTY HINGED DOORS

standard hinged door with transom
showing 70mm kiss pivot louvres

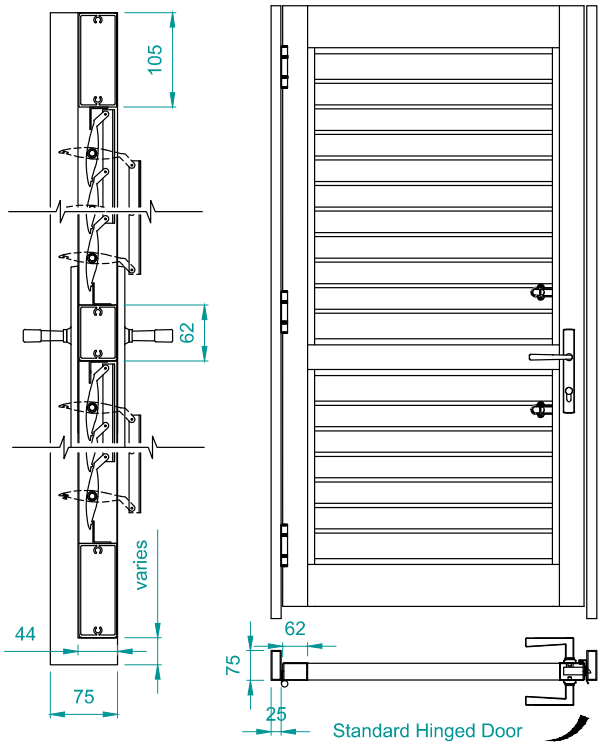


STANDARD HINGED DOOR

standard hinged two panel french door
showing 70mm end fixed louvres, no
transom required.

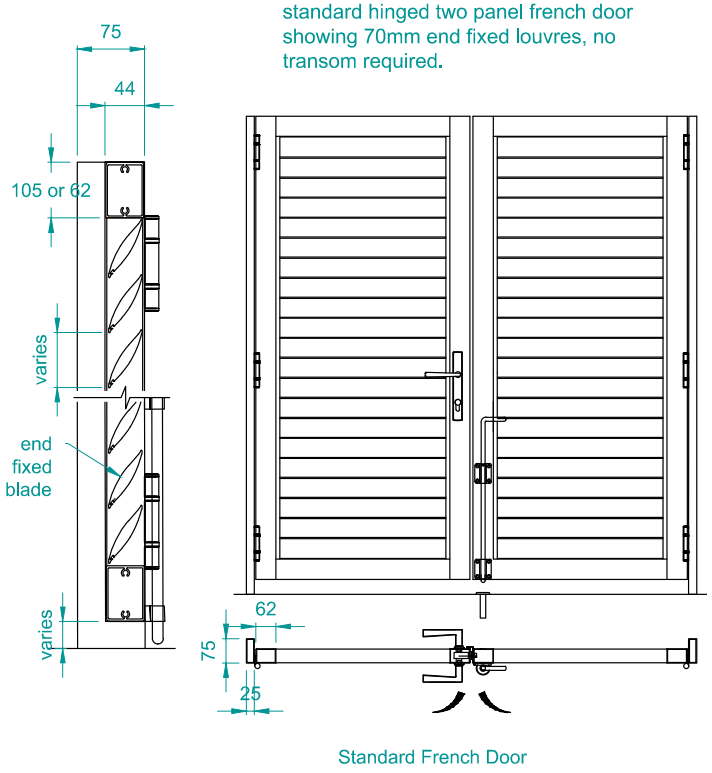


STANDARD FRENCH DOOR

Standard hinged door with transom
showing 90mm kiss pivot louvres.

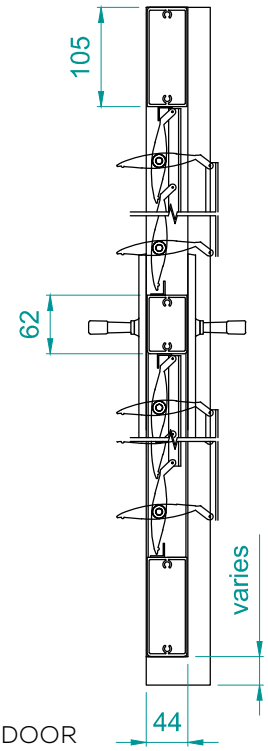


HEAVY DUTY HINGED DOOR
90MM KISS PIVOT HEAVY DUTY

heavy duty hinged door with transom
Louvres in closed position.

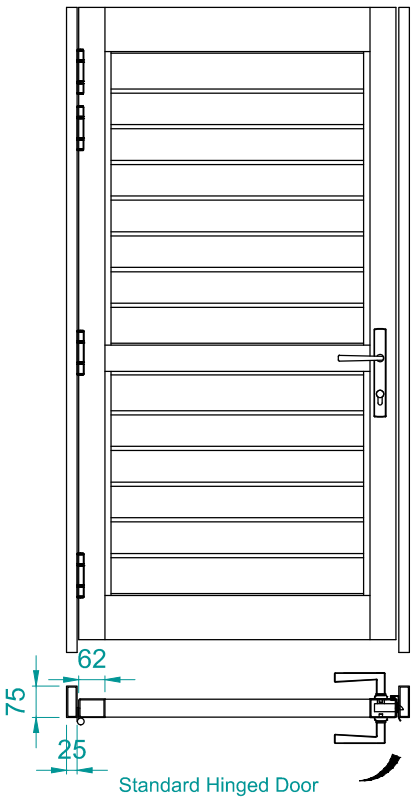




FILE: SHUTTERS 12.30

DATE MODIFIED: 01/10/2024 SCALE:

www.louvretec.co.nz www.louvretec.com.au

©Louvretec 2025 – All Rights Reserved. Technical specifications subject to change without notice.



NORTH SHORE, NZ

# 3. ULTRA WELDED HINGED DOORS & GATES

## External Shutters

Ultra Welded Hinged Doors and Gates are designed for a maximum panel size of 3000mm (h) x 1300mm (w).

Heavy Duty 100mm x 50mm fully welded aluminium box section frame is used and if required heavy duty pivot hinges can be used. Top and bottom rails are used with both fixed and adjustable louvre infills. A transom is required for all adjustable louvre infills. Available in one panel and two panel configurations.



ULTRA WELDED HINGED DOOR WITH TRANSOM

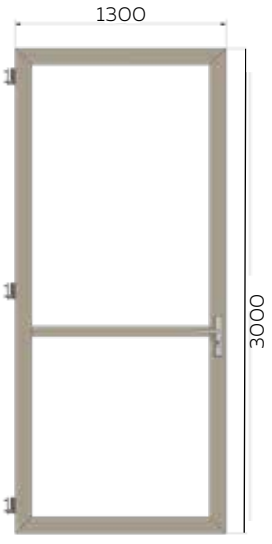


ULTRA WELDED HINGED DOOR - RECOMMENDED MAXIMUM SIZE

©Louvretec 2025 - All Rights Reserved. Technical specifications subject to change without notice.

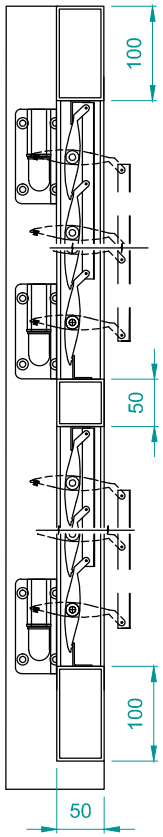


90MM KISS PIVOT

welded hinged door with transom
showing 90mm kiss pivot louvres

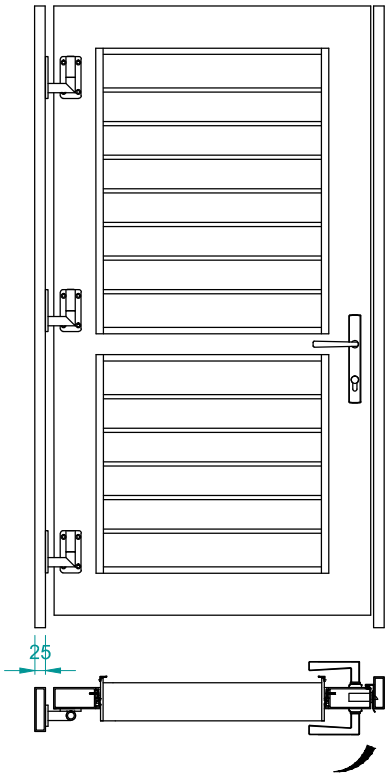


ULTRA WELDED HINGED DOOR

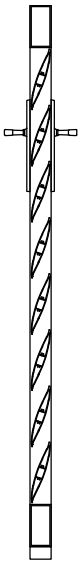

90MM KISS PANEL



welded gate showing end fixed 150 midi louvres

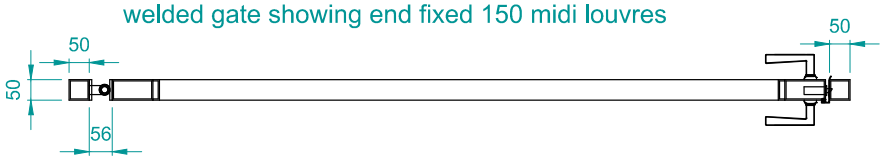


ULTRA WELDED
HINGED GATE



FILE: SHUTTERS 12.32

DATE MODIFIED: 01/10/2024 SCALE:

www.louvretec.co.nz www.louvretec.com.au

©Louvretec 2025 - All Rights Reserved. Technical specifications subject to change without notice.

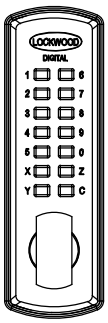


Digilock

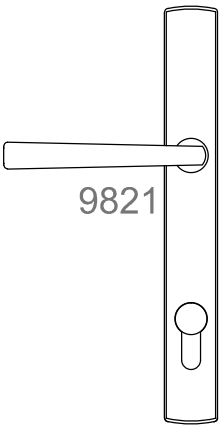

9821



9820

Hakia door handle shown, style may vary, lockable & non lockable

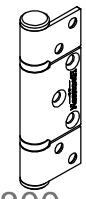

9800
stainless steel interfold offset hinge 100x66

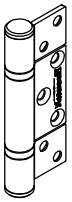

stainless steel interfold centred hinge 100x66

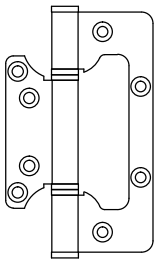

stainless steel interfold centred hinge 127x78

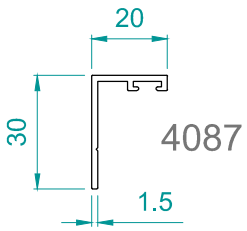


4087
mohair closing angle

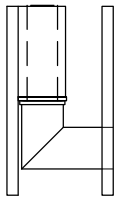

1155
heavy duty vehicle gate hinge

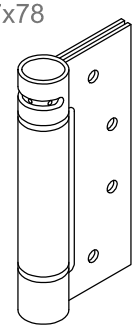

stainless steel self closing butt hinge 127x101

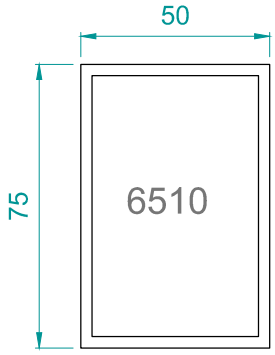


6510
75x50x3 box welded transom

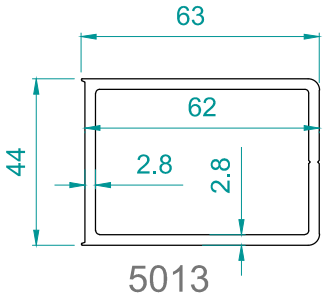


5013
heavy duty stile

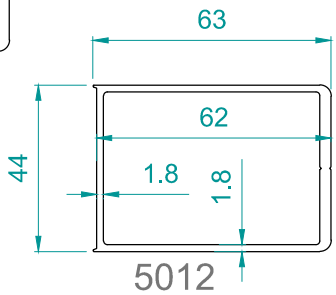


5012
Standard stile

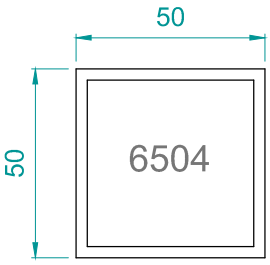


6504
50x50x3 box welded transom

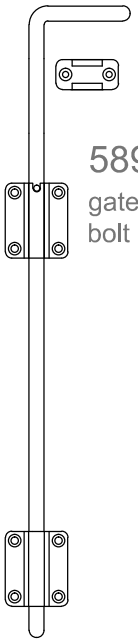

5898
gate drop bolt

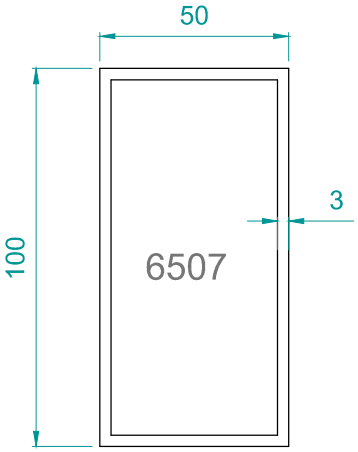


6507
100x50x3 box welded frame & transom

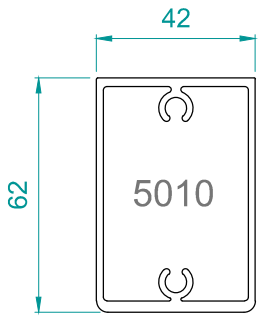


5010
top & bottom rail & transom

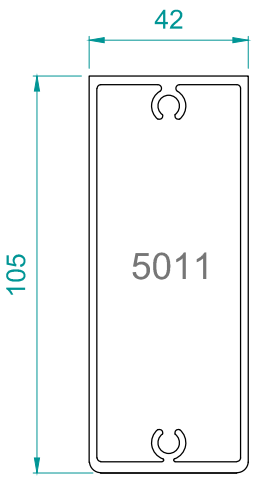


5011
top & bottom rail(large)

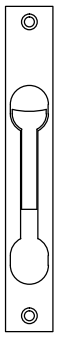

9920
flush bolt lever surface mounted


©Louvretec 2025 – All Rights Reserved. Technical specifications subject to change without notice.

# HINGED LOUVRE & PLANTATION SHUTTERS

## Hinged Louvre Windows

Louvretec's Hinged louvre shutters and Plantation Shutters use standard hinged doors extrusions and componentry. Originally used in Plantation homes in the old south of America to assist with cooling, Louvretec Plantation Shutters bring a fresh, modern design when placed externally on a home or buidling.

Bringing both form and function, Hinged Louvre &/ Plantation Shutters let you enjoy your view, natural light & ventilation when open and heat reduction, sun and privacy control when closed.



PLANTATION SHUTTERS
AUCKLAND, NZ



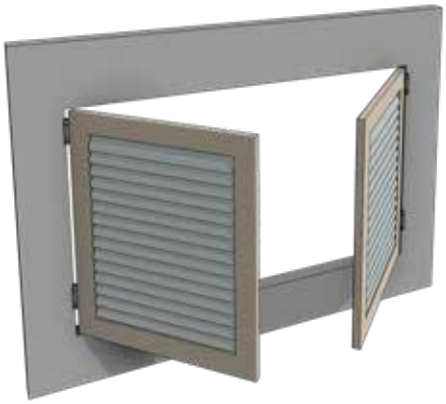

HINGED LOUVERED SHUTTER USING 90MM HAND ADJUSTABLE LOUVRE INFILLS



PLANTATION SHUTTERS IN OPEN POSITION



©Louvretec 2025 – All Rights Reserved. Technical specifications subject to change without notice.

90MM KISS PIVOT &
90MM END FIXED

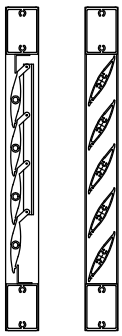

90MM KISS PIVOT

90MM END FIXED

HINGED LOUVRE SHUTTER

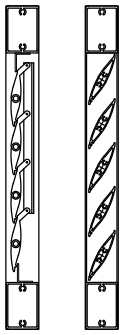

90MM KISS PIVOT

90MM END FIXED

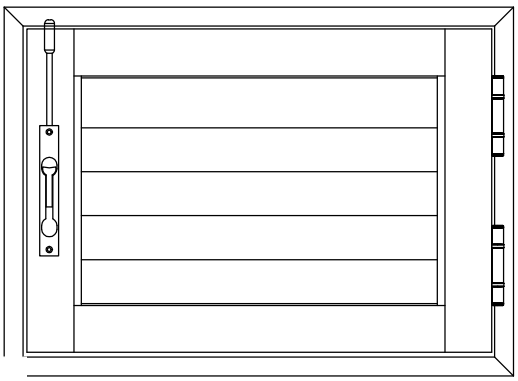

HINGED WINDOW SHOWN WITH 90MM KISS PIVOT & 90MM END FIXED

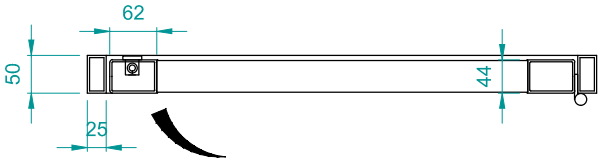


KISS PIVOT

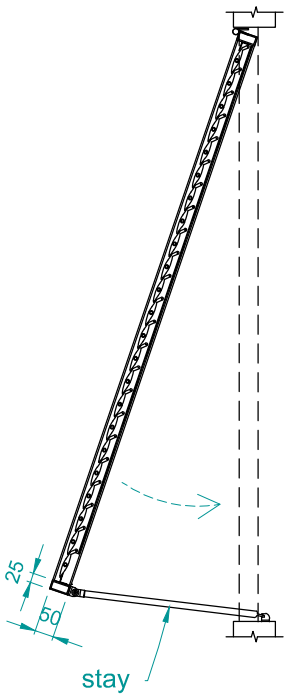


PLANTATION SHUTTER

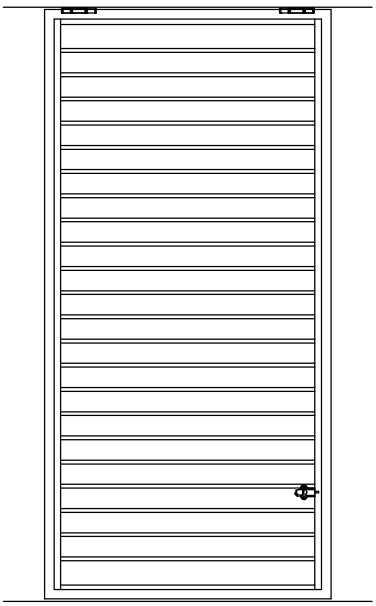

PLANTATION SHUTTER PANEL SHOWN WITH WELDED PERIMETER FRAME AND 90MM KISS PIVOT LOUVRES


©Louvretec 2025 – All Rights Reserved. Technical specifications subject to change without notice.

# LOUVRETEC PRODUCT WARRANTY

## OPENING ROOFS - SUN LOUVRES - SHUTTERS

**The Louvretec range of products:**

All Louvretec branded products are designed and engineered in Australia & New Zealand by Louvretec to comply with relevant AS/NZS standards - refer to full Louvretec Engineering data Design Manual 2025 Section 13.

Louvretec has the most extensive range of outdoor sun shading/ outdoor living products available in Australasia, backed by a comprehensive network of Louvretec Dealers.

Most Louvretec products sold in Australia are made in Australia*

Most Louvretec products sold in New Zealand are made in New Zealand*

*Some specialised products may only be made in Australia or in NZ and are shipped between each country.







**The Authorised Louvretec Dealer Network:**

Your Louvretec product will have been supplied and installed by your local Authorised Louvretec Dealer. All Louvretec Dealerships are privately owned, and the same Louvretec Dealer who supplied your Louvretec will also service your Louvretec.

Your Louvretec product has been "Engineered for Life" and we are committed to ensuring that happens.

**Louvrecare:**

Preventative maintenance and valet. Regular scheduled servicing by a Louvrecare team has real benefits. Louvrecare can vary between Dealerships - consult your local Louvretec Dealer.



*Engineered for Life*

LouvreTec®
OPENING & RETRACT ROOFS / SUN LOUVRES / SHUTTERS



©Louvretec 2025 – All Rights Reserved. Technical specifications subject to change without notice.

# LOUVRETEC PRODUCT WARRANTY

## OPENING ROOFS - SUN LOUVRES - SHUTTERS

| | |
|---|---|
| warranty details | All product installed by Louvretec (excluding Outoor Blinds - please refer separate warranty for this) , or an Authorised Louvretec Installer, is from date of invoice, fully warranted for the first two years. This warranty covers workmanship, louvres and all componentry, motors, switches and electronics with all labour costs included. In addition, from year two to end of year five, a warranty replacement of parts only applies for all motors, switches and electronics. Labour costs excluded. (Excludes any wiring and electrical connections done by others). |
| motorisation | Louvretec exclusively uses Somfy motors, switches and electronics. Somfy offers a 5-year warranty on all motors and electronics. Please contact Louvretec NZ or Somfy for a complete list of all terms and conditions. |
| product materials | All aluminium louvres and extrusions used in Louvretec's systems are manufactured in an IS09002 quality assured environment to AS1866 & AS3902 standards. Marine grade T316 stainless steel is used for drive axles, with stainless steel componentry fixings being standard. Plastic injected moulded componentry is all UV stabilised |
| powdercoat finishes | A wide range of exterior powder coat finishes are available. Duralloy or equivalent is the standard finish supplied unless stated otherwise and this carries a 10 year film and colour integrity warranty as per the Dulux Powder and Industrial Coatings Warranty. If your project has used the Duratec powdercoat range please refer to the Dulux Powder and Industrial Coatings Warranty wording. |
| anodised finishes | The current specifications re anodised aluminium range from 12-20-25 microns depth. The greater the microns the better the protection. With regular cleaning anosided material will retain its original integrity for no less than 10 years. |
| fully engineered | Our louvre systems are designed to conform to New Zealand and Australian standards wind loadings. Full engineering details available on request. |
| cleaning | Periodic cleaning is essential to remove dirt, grime and accumulated salt deposits from both powder coated and anodised surfaces. Three steps for cleaning are:<br>1 Carefully remove any loose deposits with a wet sponge.<br>2 Use a soft non abrasive brush and a mild car cleaning detergent solution to remove dust, salt and other deposits.<br>3 Rinse off with clean fresh water. |
| product description | _____ |
| louvrecare | Louvrecare is a planned preventative maintenance and valet service designed to keep your Louvretec product clean and in good working order. Contact your Louvretec Dealer for full details. |
| effective from | Warranty effective from _____/_____/_____<br>Louvretec Representative _____ Print name _____<br>Site Adddress _____ |

LOUVRETEC NZ LTD
Head office: 23c Douglas Alexander Parade, Albany 0632, Auckland New Zealand
T +64 9 415 4949
E info@louvretec.co.nz
**www.louvretec.com**

©Louvretec 2025 - All Rights Reserved. Technical specifications subject to change without notice.

# 13. ENGINEERING REPORTS


| | |
|---|---|
| Engineering References & Design Info | 13.04-13.05 |
| Aluminium Beams & Post Structures | 13.06 |
| Engineering Specifiers Guide | 13.07 |
| Calculation Chart: Opening Roof Spans | 13.08 |
| Calculation Chart: Retract Roof Spans | 13.09 |
| Calculate Chart: Airfoil Sun Louvre Spans | 13.10 |
| Calculation Chart: Rectangular Louvre Spans | 13.11 - 13.12 |
| Tributary Length; Beam Calculations | 13.13 - 13.14 |
| Beam & Post Structures | 13.15 - 13.17 |
| Post Calculations | 13.18 |
| Posts & Footings | 13.19 - 13.29 |
| Base Plate Sizes | 13.30 |
| Snow Loads | 13.31 - 13.32 |


©Louvretec 2025 – All Rights Reserved. Technical specifications subject to change without notice.





©Louvretec 2025 – All Rights Reserved. Technical specifications subject to change without notice.

# ENGINEERING REPORTS



## Backed by Specialist Engineering

©Louvretec 2025 – All Rights Reserved. Technical specifications subject to change without notice.

## ENGINEERING REFERENCES & DESIGN INFORMATION FOR LOUVRETEC SYSTEMS & SUPPORT FRAMES

09 March 2025

The following calculations and design tables apply exclusively to LouvreTec Aluminium Louvre Systems and their supporting structures. Substitutions are not permitted.

Users must ensure they reference the most recent version of the design manual, as the calculations and tables are subject to updates in response to design code changes and amendments at the time of publication.

Maximum spans for aluminium members have been calculated based on wind zones and wind speeds derived from NZS 3604:2011, in alignment with AS/NZS 1170:2021. Ultimate Limit State (ULS) wind speeds are based on a 1-in-500-year return period and are applied at the building, with site exposure multipliers accounted for. Serviceability Limit State (SLS) wind speeds correspond to a 1-in-25-year return period. Associated wind pressures are determined using AS/NZS 1170.2:2021 – Structural Design Actions, Part 2: Wind Actions and are reduced to reflect the classification of louvre frames as Importance Level 1 structures. Section capacities are calculated in accordance with AS/NZS 1664.1:1997 – Aluminium Structures, Part 1: Limit State Design.

Deflection limits are as follows:

- Dead load deflections: Limited to span/250 for both louvres and beams, with an additional cap of 20mm for louvre dead load deflections.
- Wind load deflections: Restricted to span/40 for louvres, span/250 for beams and height/100 for posts.

| **Wind Zone** | **ULS Wind Speed (m/s)** | **(km/h)** |
|---|---|---|
| Low | 32 | 115 |
| Medium | 37 | 133 |
| High | 44 | 158 |
| Very High | 50 | 179 |
| Extra High | 55 | 198 |

The following load case combinations have been applied to the member loads
0.9G,W ULS uplift pressure
1.2G, W ULS downthrust pressure
G, W SLD for deflection

Notes:

1) When the louvre structure is to be attached to an existing building, care must be taken to ensure that supporting structure has adequate strength to carry the additional loads. If there is any doubt contact Louvretec for advice.



©Louvretec 2025 - All Rights Reserved. Technical specifications subject to change without notice.

## CODES OF PRACTICE

Design has been carried out using the following codes of practice:

Structural Design Actions:
Part 0: General Principles - AS/NZS 1170.0:2002
Part 1: Permanent, imposed and other actions - AS/NZS 1170.1:2002
Part 2: Wind Actions - AS/NZS 1170.2.2021

Aluminium Structures:
Part 1: Limit state design - AS/NZS 1664.1: 1997

Timber-framed Buildings:
NZS 3604:2011

## SPIRAL PIVOT SYSTEM LOAD TEST

Louvretec Products Ltd has conducted a static load test on the Spiral Pivot System. The test confirmed that the Spiral Pivot System is capable of resisting a downward static load greater than would be generated by the application of the structural design loads used in this publication to an equivalent structure. More detailed test information is available from Louvretec upon request.

## CATEGORIES, TYPES AND INTENDED PURPOSES OF PRODUCER STATEMENTS

| | | |
|---|---|---|
| Design | PS1 Producer Statement Design | Used by designers to certify specific design elements comply with specified standards or codes in order to comply with the provisions of the Building Code. |
| | PS2 Producer Statement Design Review | Used by people undertaking a peer review of all or part of a design to say that the design or the specified part of the design complies with specified standards or codes in order to comply with the provisions of the Building Code. |
| Construction | PS3 Producer Statement Construction | Used by constructors or trades people to certify that the specified building work that they have undertaken complies with the building consent. |
| | PS4 Producer Statement Construction Review | Used by people undertaking a peer review of specified building work undertaken by constructors or trades people to certify that the building work that has been undertaken complies with the building consent. |


©Louvretec 2025 – All Rights Reserved. Technical specifications subject to change without notice.

## TYPICAL DETAIL: ALUMINIUM BEAM & POST STRUCTURES

### THREE BASIC BEAM DESIGNS

**// 1. SIMPLY SUPPORTED**

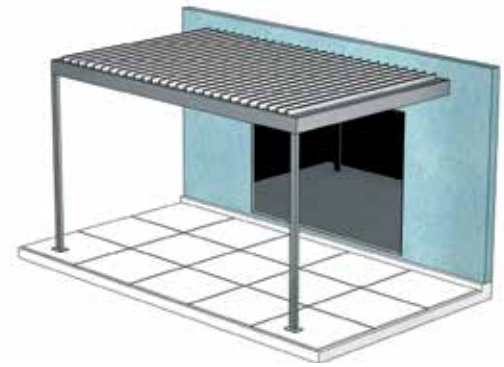

**// 2. SINGLE CANTILEVER**

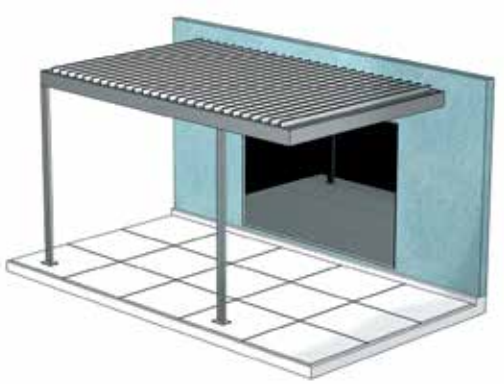

**// 3. CONTINUOUS SPAN**

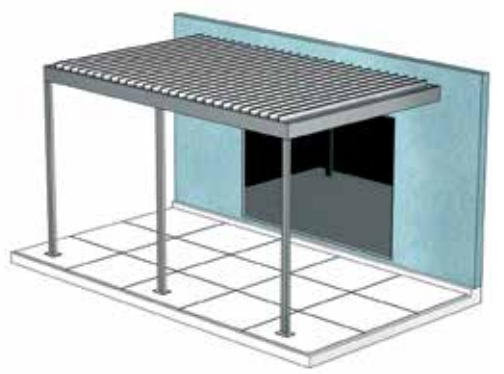

### TYPICAL ALUMINIUM BEAM & POST ASSEMBLY

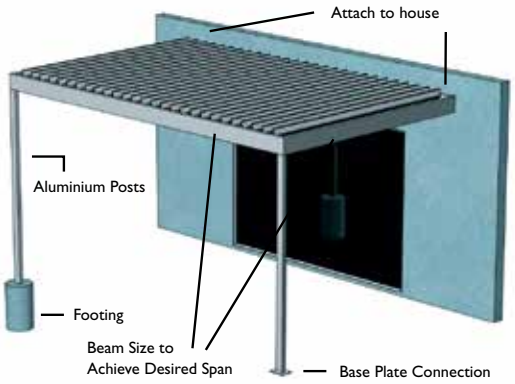


### CONFIGURATIONS AVAILABLE

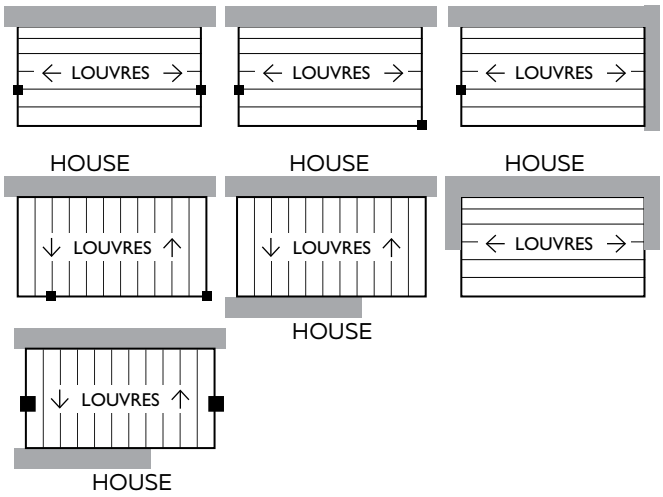


| ALUMINIUM BEAMS |
|---|
| 150 x 150 x 3* |
| 200 x 50 x 3* |
| 225 x 50 x 3 |
| 2/225 x 50 x 3 |
| 250 x 50 x 3 |
| 2/250 x 50 x 3 |
| 300 x 50 x 3 |
| 2/300 x 50 x 3 |

| ALUMINIUM POSTS |
|---|
| 75 x 75 x 3 |
| 100 x 100 x 3 |
| 100 x 100 x 5 |
| 150 x 150 x 3 |

* REFER APPENDIX

### BEAM TYPES




* REFER APPENDIX





©Louvretec 2025 – All Rights Reserved. Technical specifications subject to change without notice.

**BUILDING CONSENT AUTHORITY**

OWNER'S NAME .....

DESCRIPTION OF BUILDING WORK .....

SITE ADDRESS .....

LEGAL DESCRIPTION: LOT ..... DP .....

ALL PAGES REFER TO CURRENT LOUVRETEC DESIGN MANUAL SECTION 13 - ENGINEERING REPORTS

STEP 1 WIND ZONE

STEP 2 STRUCTURAL TYPE & DIMENSIONS
PAGE 13.15-13.17

STEP 3 LOUVRE TYPE
PAGES 13.08-13.12

STEP 4 BEAM SIZE
PAGES 13.13-13.17

STEP 5 POST SIZE
PAGES 13.18-13.26

STEP 6 FOOTING SIZE
PAGES 13.27-13.29

**WIND ZONE**

DETERMINE WIND ZONE FROM NZS 3604: 2011
(SECTION 5) L M H VH EH (Please circle one)
OR PRESSURES FROM DESIGN CODES

**STRUCTURAL TYPE & DIMENSIONS**

DETERMINE STRUCTURE TYPE EITHER:
1) SIMPLY SUPPORTED (FIG 1 PG 13.15) ☐
2) CANTILEVER (FIG 2 PG 13.15) ☐
3) CONTINUOUS SPAN (FIG 3 PG 13.16) ☐
Please Tick One

DETERMINE REQUIRED DIMENSIONS FROM APPROPRIATE FIGURE
LOUVRE SPAN: _____mm
BEAM SPAN: _____mm

**LOUVRE TYPE**

CHOOSE LOUVRETEC LOUVRE TYPE FROM MANUAL
LOUVRE TYPE: _____ VERTICAL ☐ HORIZONTAL ☐
Please Tick One

CHECK MAX SPAN FROM TABLES 1-4, PAGES 13.08-13.12

NOT OK, over span (choose alternative louvre type or alter structure to suit)

**BEAM SIZE**

DETERMINE TRIBUTARY LENGTH FOR BEAM.
DESIGN - REFER APPROPRIATE LOUVRE AND BEAM DESIGN CALCULATIONS. FIG. 1-5 ON PAGES 13.15-17

TRIBUTARY LENGTH: _____mm

NOT OK, over span or over loaded (increase beam size or alter structure to suit)

DETERMINE BEAM SIZE FROM PAGES 13. 13-14

BEAM SIZE: _____mm

**POST SIZE**

DETERMINE TRIBUTARY AREA (ROOF AREA)
TRIBUTARY EDGE LENGTH AND POST HEIGHT
REFER PAGES 13.19-13.20

TRIB. ROOF AREA: L _x W____= _____$m^2$
TRIB. EDGE LENGTH: _____mm
POST HEIGHT: _____mm

NOT OK, over height (increase structure to reduce roof area or add extra post)

SPECIFY POST SIZE FROM APPROPRIATE TABLE
FOR SPECIFIED WIND ZONE REFER PAGES 13.22-13.26

POST SIZE: _____

OK

**FOOTING SIZE**

MEASURE TRIBUTARY AREA LOADING POST.
TRIBUTARY AREA:
REFER APPROPRIATE FIGURE PAGES 13.19-13.20

NOT OK, too large (alter structure to reduce roof area or add extra post)

DETERMINE REQUIRED CONCRETE VOLUME FROM PG 13.27 CHOOSE APPROPRIATE FOOTING SIZE

CONCRETE VOLUME: _____

FOOTING SIZE: _____


©Louvretec 2025 – All Rights Reserved. Technical specifications subject to change without notice.

## TABLE 1: CALCULATE OPENING ROOF SPANS

STUDIO89 LTD
CONSULTING ENGINEERS

OVERHEAD ADJUSTABLE OPENING ROOF

REFER STUDIO 89 PS1



| WIND ZONE | | L | M | H | VH | EH |
|---|---|---|---|---|---|---|
| Ultimate design factored wind speed at building | | 115km/h | 133km/h | 158km/h | 179km/h | 198km/h |
| | | 32 m/s | 37 m/s | 44 m/s | 50 m/s | 55 m/s |

| ROOF LOUVRE (3m ROOF HEIGHT) | L | M | H | VH | EH |
|---|---|---|---|---|---|
| Louvretec 180 opening slimline roof | 4000 | 4000 | 3750 | 3200 | 2850 |
| Louvretec 200 opening slimline roof | 4500 | 4500 | 4500 | 4300 | 4000 |
| Louvretec 220 opening slimline roof (retract compatible) | 4300 | 4300 | 4200 | 4000 | 3500 |
| Louvretec 220/45 opening alpine* roof (retract compatible) | 5000 | 5000 | 5000 | 5000 | 5000 |
| Louvretec 200 opening suburban roof | 4500 | 4500 | 4000 | 3600 | 3300 |
| Louvretec 270 opening translucent roof | 4500 | 4500 | 4000 | 3500 | 3250 |

| ROOF LOUVRE (6m ROOF HEIGHT) | L | M | H | VH | EH |
|---|---|---|---|---|---|
| Louvretec 180 opening slimline roof | 4000 | 4000 | 3300 | 2800 | 2500 |
| Louvretec 200 opening slimline roof | 4500 | 4500 | 4400 | 4000 | 3800 |
| Louvretec 220 opening slimline roof (retract compatible) | 4300 | 4300 | 4050 | 3500 | 3150 |
| Louvretec 220/45 opening alpine* roof (retract compatible) | 5000 | 5000 | 5000 | 5000 | 4700 |
| Louvretec 200 opening suburban roof | 4500 | 4500 | 3800 | 3250 | 3000 |
| Louvretec 270 opening translucent roof | 4500 | 4500 | 3550 | 3250 | 3000 |

*For larger spans, typically alpine and coastal locations



LouvreTec®



©Louvretec 2025 – All Rights Reserved. Technical specifications subject to change without notice.

STUDIO89 LTD
CONSULTING ENGINEERS

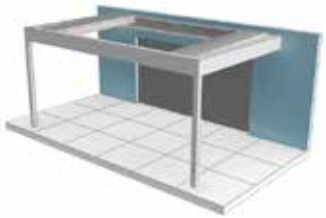

## OVERHEAD RETRACT ROOF

REFER STUDIO 89 PS1

| WIND ZONE | | L | M | H | VH | EH |
|---|---|---|---|---|---|---|
| Ultimate design factored wind speed at building | | 115km/h | 133km/h | 158km/h | 179km/h | 198km/h |
| | | 32 m/s | 37 m/s | 44 m/s | 50 m/s | 55 m/s |

| RETRACT ROOF LOUVRE (3m ROOF HEIGHT) | L | M | H | VH | EH |
|---|---|---|---|---|---|
| Louvretec 220 retract slimline roof (spiral compatible) 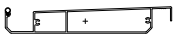 | 4300 | 4300 | 4200 | 4000 | 3500 |
| Louvretec 220/45 retract alpine* roof (spiral compatible) 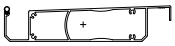 | 5000 | 5000 | 5000 | 5000 | 5000 |

| RETRACT ROOF LOUVRE (6m ROOF HEIGHT) | L | M | H | VH | EH |
|---|---|---|---|---|---|
| Louvretec 220 retract slimline roof (spiral compatible) 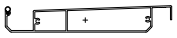 | 4300 | 4300 | 4050 | 3500 | 3150 |
| Louvretec 220/45 retract alpine* roof (spiral compatible) 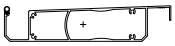 | 5000 | 5000 | 5000 | 5000 | 4700 |

*For larger spans, typically alpine and coastal locations

## SNOW LOADS

REFER ENGINEERING SECTION, PAGES 13.31 & 13.32 for Snow Load information.


©Louvretec 2025 – All Rights Reserved. Technical specifications subject to change without notice.

## TABLE 2: CALCULATE SUN LOUVRES RL SPANS

MARKPLAN
STRUCTURAL & CIVIL ENGINEERS

SUN LOUVRE APPLICATIONS:

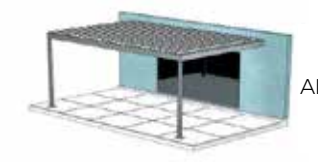

OVERHEAD
ADJUSTABLE & FIXED



HORIZONTAL WALL
ADJUSTABLE & FIXED



VERTICAL WALL
ADJUSTABLE & FIXED

LOUVRETEC SUN LOUVRES CAN BE END FIXED OR BRACKET FIXED

REFER MARKPLAN PS1

| WIND ZONE | | INSIDE (SELF WT) | L | M | H | VH | EH |
|---|---|---|---|---|---|---|---|
| Ultimate design factored wind speed at building | | | 115km/h | 133km/h | 158km/h | 179km/h | 198km/h |
| | | | 32 m/s | 37 m/s | 44 m/s | 50 m/s | 55 m/s |

| AIRFOIL SUN LOUVRE | INSIDE (SELF WT) | L | M | H | VH | EH |
|---|---|---|---|---|---|---|
| 90MM KISS PIVOT MIDI LOUVRE | 2350 | 2000 | 1850 | 1600 | 1500 | 1400 |
| 150MM KISS & SPIRAL PIVOT MIDI LOUVRE | 2900 | 2750 | 2500 | 2200 | 2000 | 1900 |
| 120MM AIRFOIL LOUVRE | 2400 | 2300 | 2100 | 1850 | 1700 | 1600 |
| 180MM AIRFOIL LOUVRE | 3100 | 2950 | 2700 | 2400 | 2200 | 2050 |
| 200MM MAXI LOUVRE | 3700 | 3700 | 3550 | 2950 | 2600 | 2350 |
| 300MM MAXI LOUVRE | 4800 | 4800 | 4800 | 4200 | 3700 | 3350 |
| 600MM MAXI LOUVRE | 5800 | 5800 | 5600 | 4700 | 4100 | 3700 |


©Louvretec 2025 – All Rights Reserved. Technical specifications subject to change without notice.

MARKPLAN
STRUCTURAL & CIVIL ENGINEERS

## SUN LOUVRE APPLICATIONS:

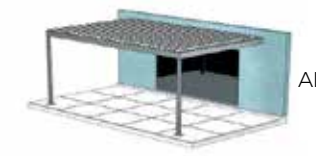

OVERHEAD
ADJUSTABLE & FIXED



HORIZONTAL WALL
ADJUSTABLE & FIXED



VERTICAL WALL
ADJUSTABLE & FIXED

LOUVRETEC SUN LOUVRES CAN BE END FIXED OR BRACKET FIXED

**REFER MARKPLAN PS1**

| WIND ZONE | | INSIDE (SELF WT) | L | M | H | VH | EH |
|---|---|---|---|---|---|---|---|
| Ultimate design factored wind speed at building | | | 115km/h | 133km/h | 158km/h | 179km/h | 198km/h |
| | | | 32 m/s | 37 m/s | 44 m/s | 50 m/s | 55 m/s |

| RECTANGULAR SUN LOUVRE | INSIDE (SELF WT) | L | M | H | VH | EH |
|---|---|---|---|---|---|---|
| 120MM FLUSH MINI | 2600 | 2500 | 2300 | 2050 | 1900 | 1750 |
| 180MM FLUSH MIDI | 3500 | 3350 | 3000 | 2650 | 2450 | 2250 |
| 200MM FLUSH MAXI | 3500 | 3350 | 3000 | 2650 | 2450 | 2250 |
| 125MM WEATHERBOARD | 2600 | 2500 | 2300 | 2050 | 1900 | 1750 |
| 180MM WEATHERBOARD | 3200 | 3050 | 2800 | 2500 | 2300 | 2100 |
| 150MM WEATHERBOARD | 3200 | 3050 | 2750 | 2400 | 2200 | 2050 |
| 95MM BELLA VISTA | 2550 | 2100 | 1900 | 1700 | 1550 | 1450 |
| 95MM BELLA VISTA HEAVY | 3000 | 2800 | 2550 | 2250 | 2050 | 1900 |
| 135MM HI-SPAN | 4850 | 4400 | 4400 | 4100 | 3700 | 3500 |
| 165MM HI-SPAN | 4950 | 4500 | 4500 | 4200 | 3800 | 3500 |

**NEW FULL HEIGHT OPERABLE OR FIXED BALUSTRADE LOUVRES**

| | | | | | | |
|---|---|---|---|---|---|---|
| 135MM HI-SPAN NZ COMPLIANT - MAX OPENING BETWEEN BLADES NO WIDER THAN 100MM | 3000 | 3000 | 3000 | 3000 | 3000 | 3000 |
| 165MM HI-SPAN AUSTRALIA COMPLIANT - MAX OPENING BETWEEN BLADES NO WIDER THAN 125MM | 3300 | 3300 | 3300 | 3300 | 3300 | 3300 |


©Louvretec 2025 – All Rights Reserved. Technical specifications subject to change without notice.

## TABLE 4: CALCULATE SUN LOUVRES RL SPANS

MARKPLAN
STRUCTURAL & CIVIL ENGINEERS

NOTE: ALL LOUVRETEC SUN LOUVRES CAN BE END FIXED OR BRACKET FIXED

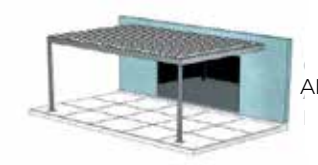

OVERHEAD
ADJUSTABLE & FIXED



HORIZONTAL WALL
ADJUSTABLE & FIXED



VERTICAL WALL
ADJUSTABLE & FIXED

LOUVRETEC SUN LOUVRES CAN ALSO BE END FIXED OR BRACKET FIXED

REFER MARKPLAN PS1

| WIND ZONE | | INSIDE (SELF WT) | L | M | H | VH | EH |
|---|---|---|---|---|---|---|---|
| Ultimate design factored wind speed at building | | | 115km/h | 133km/h | 158km/h | 179km/h | 198km/h |
| | | | 32 m/s | 37 m/s | 44 m/s | 50 m/s | 55 m/s |

| RL SUN LOUVRE | INSIDE (SELF WT) | L | M | H | VH | EH |
|---|---|---|---|---|---|---|
| RL 300 SQUARE | 5800 | 5800 | 5800 | 5150 | 4500 | 4050 |
| RL 450 SQUARE | 5800 | 5800 | 5800 | 5150 | 4500 | 4050 |
| RL 600 SQUARE | 5800 | 5800 | 5800 | 5150 | 4500 | 4050 |
| RL 300 MITIRED | 5800 | 5800 | 5800 | 5150 | 4500 | 4050 |
| RL 450 MITRED | 5800 | 5800 | 5800 | 5150 | 4500 | 4050 |
| RL 600 MITRED | 5800 | 5800 | 5800 | 5150 | 4500 | 4050 |
| 75 X 45 RHS BEAM WITH SCREW PORTS | 5950 | 5950 | 5950 | 5950 | 5700 | 5150 |
| 100 X 50 X 3 RHS BEAM | 6450 | 6450 | 6450 | 6450 | 6250 | 5600 |
| 150 X 50 X 3 BEAM WITH SCREW PORTS | 5800 | 5800 | 5800 | 5150 | 4500 | 4050 |
| 200 X 50 X 3 RHS BEAM | 6450 | 6450 | 6450 | 5600 | 4900 | 4400 |
| 225 X 50 X 3 RHS BEAM | 6450 | 6450 | 6150 | 5250 | 4600 | 4150 |
| 250 X 50 X 3 RHS BEAM | 6450 | 6450 | 5850 | 4950 | 4350 | 3900 |
| 300 X 50 X 3 RHS BEAM | 6450 | 6400 | 5700 | 4900 | 4250 | 3850 |



LouvreTec®



©Louvretec 2025 – All Rights Reserved. Technical specifications subject to change without notice.

STUDIO89 LTD
CONSULTING ENGINEERS

## DETERMINING THE TRIBUTARY LENGTH

Typically the tributary length for simply supported beams only is half the length of the louvres span.
Determining the tributary length is shown through figures 1-5 on pages 13.15-17 of this Engineering section.

Note: Care must be taken when cacluating the tributary length for beams on continuous spanning structures as half of the louvre span on either side of the beam may not be equal.

## BEAM TYPES

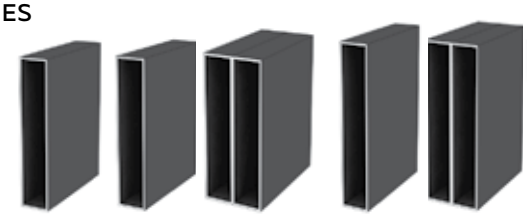


* REFER APPENDIX




Fix double beams together with 2/10g x 25mm S/S pan head self tapping screws 50mm in from top and bottom of box sections at 900mm centres.
Use continuous flexible sealant/adhesive along top and bottom between box sections.

**TABLE 5** - BEAM CALCULATIONS SINGLE STORY UP TO 3M

| ULS | Max Beam Span (mm) | | | | | | | | | | | | | | | | | |
|---|---|---|---|---|---|---|---|---|---|---|---|---|---|---|---|---|---|---|
| WIND ZONE | Tributary Length | 1.00 | 1.25 | 1.50 | 1.75 | 2.00 | 2.25 | 2.50 | 2.75 | 3.00 | 3.25 | 3.50 | 3.75 | 4.00 | 4.25 | 4.50 | 4.75 | 5.00 |
| +0.92 LOW -1.15 | 225x50x3 RHS | 6.48 | 6.04 | 5.73 | 5.45 | 5.23 | 5.04 | 4.86 | 4.72 | 4.59 | 4.48 | 4.37 | 4.27 | 4.18 | 4.09 | 4.01 | 3.95 | 3.88 |
| | 250x50x3 RHS | 6.95 | 6.64 | 6.28 | 5.99 | 5.74 | 5.53 | 5.35 | 5.18 | 5.03 | 4.91 | 4.79 | 4.68 | 4.59 | 4.5 | 4.41 | 4.34 | 4.26 |
| | 2-250x50x3 RHS | 6.95 | 6.95 | 6.95 | 6.95 | 6.95 | 6.95 | 6.95 | 6.85 | 6.67 | 6.49 | 6.34 | 6.20 | 6.08 | 5.96 | 5.87 | 5.77 | 5.68 |
| | 300x50x3.5 RHS | 6.95 | 6.95 | 6.95 | 6.95 | 6.95 | 6.83 | 6.60 | 6.41 | 6.24 | 6.06 | 5.92 | 5.80 | 5.68 | 5.56 | 5.46 | 5.35 | 5.21 |
| | 2-300x50x3.5 RHS | 6.95 | 6.95 | 6.95 | 6.95 | 6.95 | 6.95 | 6.95 | 6.95 | 6.95 | 6.95 | 6.95 | 6.95 | 6.95 | 6.95 | 6.95 | 6.95 | 6.95 |
| +1.23 MEDIUM -1.53 | 225x50x3 RHS | 6.36 | 5.94 | 5.63 | 5.35 | 5.14 | 4.96 | 4.78 | 4.63 | 4.51 | 4.41 | 4.30 | 4.19 | 4.10 | 4.03 | 3.95 | 3.88 | 3.83 |
| | 250x50x3 RHS | 6.95 | 6.54 | 6.18 | 5.89 | 5.65 | 5.42 | 5.26 | 5.11 | 4.96 | 4.82 | 4.71 | 4.61 | 4.50 | 4.43 | 4.35 | 4.26 | 4.20 |
| | 2-250x50x3 RHS | 6.95 | 6.95 | 6.95 | 6.95 | 6.95 | 6.95 | 6.92 | 6.74 | 6.55 | 6.40 | 6.24 | 6.11 | 5.99 | 5.88 | 5.76 | 5.66 | 5.56 |
| | 300x50x3.5 RHS | 6.95 | 6.95 | 6.95 | 6.95 | 6.95 | 6.72 | 6.50 | 6.30 | 6.14 | 5.97 | 5.83 | 5.70 | 5.58 | 5.46 | 5.37 | 5.26 | 5.14 |
| | 2-300x50x3.5 RHS | 6.95 | 6.95 | 6.95 | 6.95 | 6.95 | 6.95 | 6.95 | 6.95 | 6.95 | 6.95 | 6.95 | 6.95 | 6.95 | 6.95 | 6.95 | 6.95 | 6.88 |
| +1.74 HIGH -2.17 | 225x50x3 RHS | 6.18 | 5.75 | 5.41 | 5.15 | 4.92 | 4.7 | 4.46 | 4.26 | 4.08 | 3.92 | 3.78 | 3.65 | 3.54 | 3.43 | 3.33 | 3.25 | 3.16 |
| | 250x50x3 RHS | 6.79 | 6.30 | 5.94 | 5.64 | 5.40 | 5.14 | 4.87 | 4.65 | 4.45 | 4.28 | 4.13 | 3.99 | 3.86 | 3.75 | 3.64 | 3.55 | 3.46 |
| | 2-250x50x3 RHS | 6.95 | 6.95 | 6.95 | 6.95 | 6.95 | 6.88 | 6.64 | 6.44 | 6.24 | 6.00 | 5.79 | 5.60 | 5.42 | 5.26 | 5.12 | 4.98 | 4.86 |
| | 300x50x3.5 RHS | 6.95 | 6.95 | 6.95 | 6.93 | 6.49 | 6.12 | 5.81 | 5.54 | 5.31 | 5.10 | 4.92 | 4.75 | 4.60 | 4.46 | 4.34 | 4.22 | 4.12 |
| | 2-300x50x3.5 RHS | 6.95 | 6.95 | 6.95 | 6.95 | 6.95 | 6.95 | 6.95 | 6.95 | 6.95 | 6.95 | 6.95 | 6.95 | 6.81 | 6.61 | 6.43 | 6.26 | 6.11 |
| +2.24 VERY HIGH -2.80 | 225x50x3 RHS | 5.50 | 5.10 | 4.80 | 4.57 | 4.28 | 4.03 | 3.83 | 3.65 | 3.5 | 3.36 | 3.24 | 3.13 | 3.04 | 2.95 | 2.86 | 2.79 | 2.72 |
| | 250x50x3 RHS | 6.04 | 5.60 | 5.27 | 4.99 | 4.67 | 4.41 | 4.18 | 3.99 | 3.82 | 3.68 | 3.54 | 3.42 | 3.32 | 3.22 | 3.13 | 3.04 | 2.97 |
| | 2-250x50x3 RHS | 6.95 | 6.95 | 6.95 | 6.64 | 6.35 | 6.13 | 5.85 | 5.59 | 5.36 | 5.15 | 4.97 | 4.81 | 4.66 | 4.52 | 4.40 | 4.28 | 4.18 |
| | 300x50x3.5 RHS | 6.95 | 6.93 | 6.41 | 5.94 | 5.56 | 5.25 | 4.99 | 4.76 | 4.56 | 4.38 | 4.22 | 4.08 | 3.95 | 3.83 | 3.73 | 3.63 | 3.54 |
| | 2-300x50x3.5 RHS | 6.95 | 6.95 | 6.95 | 6.95 | 6.95 | 6.95 | 6.95 | 6.95 | 6.73 | 6.48 | 6.25 | 6.04 | 5.85 | 5.68 | 5.53 | 5.38 | 5.25 |
| +2.71 EXTRA HIGH -3.39 | 225x50x3 RHS | 5.05 | 4.70 | 4.41 | 4.09 | 3.83 | 3.62 | 3.43 | 3.28 | 3.14 | 3.02 | 2.91 | 2.81 | 2.72 | 2.64 | 2.57 | 2.5 | 2.44 |
| | 250x50x3 RHS | 5.54 | 5.16 | 4.82 | 4.47 | 4.18 | 3.95 | 3.75 | 3.58 | 3.43 | 3.29 | 3.18 | 3.07 | 2.97 | 2.88 | 2.8 | 2.73 | 2.66 |
| | 2-250x50x3 RHS | 6.95 | 6.80 | 6.44 | 6.12 | 5.84 | 5.52 | 5.25 | 5.01 | 4.80 | 4.62 | 4.46 | 4.31 | 4.18 | 4.05 | 3.94 | 3.84 | 3.74 |
| | 300x50x3.5 RHS | 6.87 | 6.27 | 5.74 | 5.32 | 4.99 | 4.71 | 4.47 | 4.26 | 4.08 | 3.93 | 3.78 | 3.66 | 3.54 | 3.44 | 3.34 | 3.25 | 3.17 |
| | 2-300x50x3.5 RHS | 6.95 | 6.95 | 6.95 | 6.95 | 6.95 | 6.94 | 6.59 | 6.30 | 6.04 | 5.81 | 5.60 | 5.42 | 5.25 | 5.09 | 4.95 | 4.82 | 4.70 |

PLEASE NOTE:
Aluminium Beams have been limited to 6.95m in length.
This is the maximum practical length for extruding and powdercoating.


©Louvretec 2025 - All Rights Reserved. Technical specifications subject to change without notice.

## TABLE 6: TO CALCULATE TRIBUTARY LENGTH FOR BEAMS
## CHART: BEAM CALCULATIONS DOUBLE STORY UP TO 6 METRE ROOF HEIGHT. REFER STUDIO 89 PS1

STUDIO89 LTD
CONSULTING ENGINEERS

### DETERMINING THE TRIBUTARY LENGTH

Typically the tributary length for simply supported beams only is half the length of the louvres span.
Determining the tributary length is shown through figures 1-5 on pages 13.15-17 of this Engineering section.

Note: Care must be taken when cacluating the tributary length fo ontinuous spanning structures as half of the louvre span on either side of the beam may nc

### BEAM TYPES

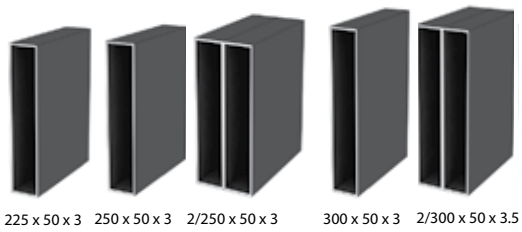


* REFER APPENDIX

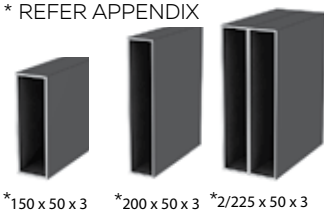


Fix double beams together with 2/10g x 25mm S/S pan head self tapping screws 50mm in from top and bottom of box sections at 900mm centres.
Use continuous flexible sealant/adhesive along top and bottom between box sections.

**TABLE 6** - BEAM CALCULATIONS DOUBLE STORY UP TO 6M

| ULS | Max Beam Span (mm) | | | | | | | | | | | | | | | | | |
|---|---|---|---|---|---|---|---|---|---|---|---|---|---|---|---|---|---|---|
| WIND ZONE | Tributary Length | 1.00 | 1.25 | 1.50 | 1.75 | 2.00 | 2.25 | 2.50 | 2.75 | 3.00 | 3.25 | 3.50 | 3.75 | 4.00 | 4.25 | 4.50 | 4.75 | 5.00 |
| +0.92 LOW -1.15 | 225x50x3 RHS | 6.48 | 6.05 | 5.73 | 5.44 | 5.24 | 5.04 | 4.86 | 4.73 | 4.59 | 4.47 | 4.36 | 4.26 | 4.17 | 4.11 | 4.03 | 3.96 | 3.88 |
| | 250x50x3 RHS | 6.95 | 6.63 | 6.27 | 5.98 | 5.73 | 5.52 | 5.33 | 5.18 | 5.04 | 4.91 | 4.78 | 4.68 | 4.59 | 4.48 | 4.41 | 4.33 | 4.27 |
| | 2-250x50x3 RHS | 6.95 | 6.95 | 6.95 | 6.95 | 6.95 | 6.95 | 6.95 | 6.85 | 6.67 | 6.49 | 6.35 | 6.21 | 6.09 | 5.97 | 5.87 | 5.76 | 5.66 |
| | 300x50x3.5 RHS | 6.95 | 6.95 | 6.95 | 6.95 | 6.95 | 6.78 | 6.57 | 6.38 | 6.20 | 6.05 | 5.91 | 5.77 | 5.65 | 5.55 | 5.44 | 5.33 | 5.2 |
| | 2-300x50x3.5 RHS | 6.95 | 6.95 | 6.95 | 6.95 | 6.95 | 6.95 | 6.95 | 6.95 | 6.95 | 6.95 | 6.95 | 6.95 | 6.95 | 6.95 | 6.95 | 6.95 | 6.95 |
| +1.23 MEDIUM -1.53 | 225x50x3 RHS | 6.38 | 5.95 | 5.62 | 5.36 | 5.15 | 4.95 | 4.79 | 4.60 | 4.40 | 4.23 | 4.08 | 3.94 | 3.82 | 3.70 | 3.60 | 3.50 | 3.42 |
| | 250x50x3 RHS | 6.95 | 6.53 | 6.19 | 5.88 | 5.64 | 5.43 | 5.25 | 5.02 | 4.81 | 4.62 | 4.46 | 4.30 | 4.17 | 4.05 | 3.93 | 3.83 | 3.73 |
| | 2-250x50x3 RHS | 6.95 | 6.95 | 6.95 | 6.95 | 6.95 | 6.95 | 6.93 | 6.72 | 6.54 | 6.39 | 6.25 | 6.08 | 5.89 | 5.71 | 5.55 | 5.41 | 5.27 |
| | 300x50x3.5 RHS | 6.95 | 6.95 | 6.95 | 6.95 | 6.93 | 6.64 | 6.30 | 6.00 | 5.75 | 5.52 | 5.32 | 5.14 | 4.98 | 4.83 | 4.69 | 4.57 | 4.45 |
| | 2-300x50x3.5 RHS | 6.95 | 6.95 | 6.95 | 6.95 | 6.95 | 6.95 | 6.95 | 6.95 | 6.95 | 6.95 | 6.95 | 6.95 | 6.95 | 6.95 | 6.95 | 6.82 | 6.64 |
| +1.74 HIGH -2.17 | 225x50x3 RHS | 5.57 | 5.19 | 4.87 | 4.64 | 4.36 | 4.11 | 3.90 | 3.72 | 3.57 | 3.43 | 3.31 | 3.19 | 3.09 | 3.00 | 2.92 | 2.84 | 2.77 |
| | 250x50x3 RHS | 6.12 | 5.68 | 5.35 | 5.08 | 4.76 | 4.49 | 4.26 | 4.07 | 3.90 | 3.75 | 3.61 | 3.49 | 3.38 | 3.28 | 3.19 | 3.10 | 3.03 |
| | 2-250x50x3 RHS | 6.95 | 6.95 | 6.95 | 6.74 | 6.45 | 6.21 | 5.97 | 5.7 | 5.46 | 5.25 | 5.07 | 4.90 | 4.75 | 4.61 | 4.48 | 4.36 | 4.26 |
| | 300x50x3.5 RHS | 6.95 | 6.95 | 6.56 | 6.08 | 5.69 | 5.37 | 5.09 | 4.86 | 4.65 | 4.47 | 4.31 | 4.16 | 4.03 | 3.91 | 3.8 | 3.70 | 3.61 |
| | 2-300x50x3.5 RHS | 6.95 | 6.95 | 6.95 | 6.95 | 6.95 | 6.95 | 6.95 | 6.95 | 6.86 | 6.60 | 6.37 | 6.16 | 5.97 | 5.79 | 5.63 | 5.48 | 5.35 |
| +2.24 VERY HIGH -2.80 | 225x50x3 RHS | 4.98 | 4.64 | 4.33 | 4.02 | 3.76 | 3.55 | 3.37 | 3.22 | 3.08 | 2.96 | 2.85 | 2.76 | 2.67 | 2.59 | 2.52 | 2.45 | 2.39 |
| | 250x50x3 RHS | 5.48 | 5.10 | 4.73 | 4.39 | 4.11 | 3.88 | 3.68 | 3.51 | 3.36 | 3.23 | 3.12 | 3.01 | 2.92 | 2.83 | 2.75 | 2.68 | 2.61 |
| | 2-250x50x3 RHS | 6.95 | 6.71 | 6.34 | 6.03 | 5.73 | 5.42 | 5.15 | 4.92 | 4.72 | 4.54 | 4.38 | 4.23 | 4.10 | 3.98 | 3.87 | 3.77 | 3.68 |
| | 300x50x3.5 RHS | 6.81 | 6.18 | 5.65 | 5.24 | 4.91 | 4.63 | 4.39 | 4.19 | 4.02 | 3.86 | 3.72 | 3.59 | 3.48 | 3.38 | 3.28 | 3.20 | 3.12 |
| | 2-300x50x3.5 RHS | 6.95 | 6.95 | 6.95 | 6.95 | 6.95 | 6.81 | 6.47 | 6.18 | 5.93 | 5.70 | 5.50 | 5.32 | 5.15 | 5.00 | 4.86 | 4.74 | 4.62 |
| +2.71 EXTRA HIGH -3.39 | 225x50x3 RHS | 4.61 | 4.25 | 3.89 | 3.61 | 3.38 | 3.19 | 3.03 | 2.89 | 2.77 | 2.66 | 2.57 | 2.48 | 2.4 | 2.33 | 2.27 | 2.21 | 2.15 |
| | 250x50x3 RHS | 5.07 | 4.64 | 4.25 | 3.94 | 3.69 | 3.49 | 3.31 | 3.16 | 3.03 | 2.91 | 2.80 | 2.71 | 2.62 | 2.55 | 2.48 | 2.41 | 2.35 |
| | 2-250x50x3 RHS | 6.66 | 6.22 | 5.88 | 5.49 | 5.16 | 4.87 | 4.63 | 4.42 | 4.24 | 4.08 | 3.94 | 3.81 | 3.69 | 3.58 | 3.48 | 3.39 | 3.31 |
| | 300x50x3.5 RHS | 6.19 | 5.55 | 5.08 | 4.71 | 4.41 | 4.16 | 3.95 | 3.77 | 3.61 | 3.47 | 3.34 | 3.23 | 3.13 | 3.04 | 2.95 | 2.87 | 2.8 |
| | 2-300x50x3.5 RHS | 6.95 | 6.95 | 6.95 | 6.90 | 6.48 | 6.12 | 5.82 | 5.56 | 5.33 | 5.13 | 4.95 | 4.78 | 4.63 | 4.50 | 4.37 | 4.26 | 4.15 |

PLEASE NOTE:
Aluminium Beams have been limited to 6.95m in length.
This is the maximum practical length for extruding and powdercoating.


©Louvretec 2025 - All Rights Reserved. Technical specifications subject to change without notice.

## TYPICAL DETAIL | SIMPLY SUPPORTED BEAM, FIGURE 1

### Plan view / Louvre and Beam Design

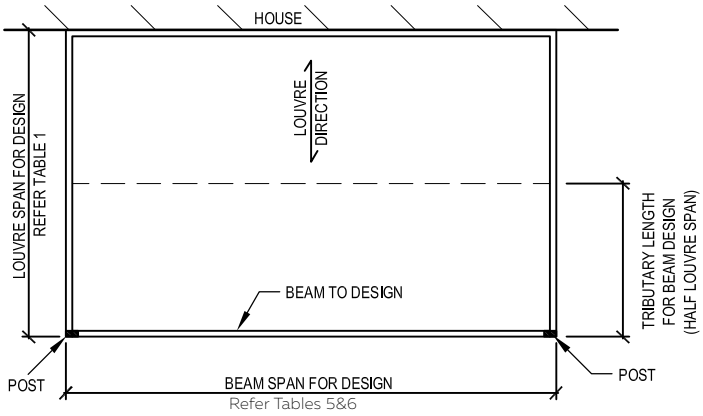


### Front Elevation

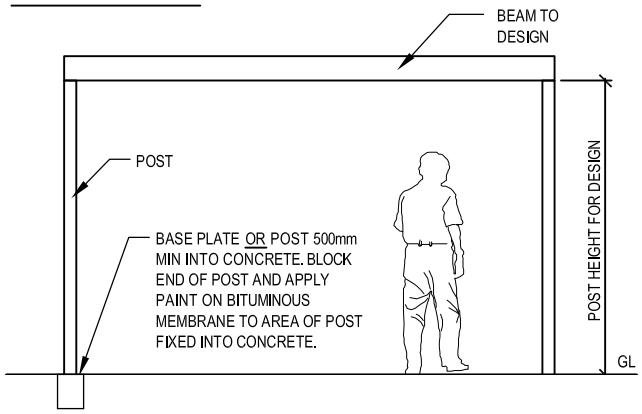


## TYPICAL DETAIL // SIMPLY SUPPORTED BEAM, FIGURE 2

### Plan view / Louvre and Beam Design

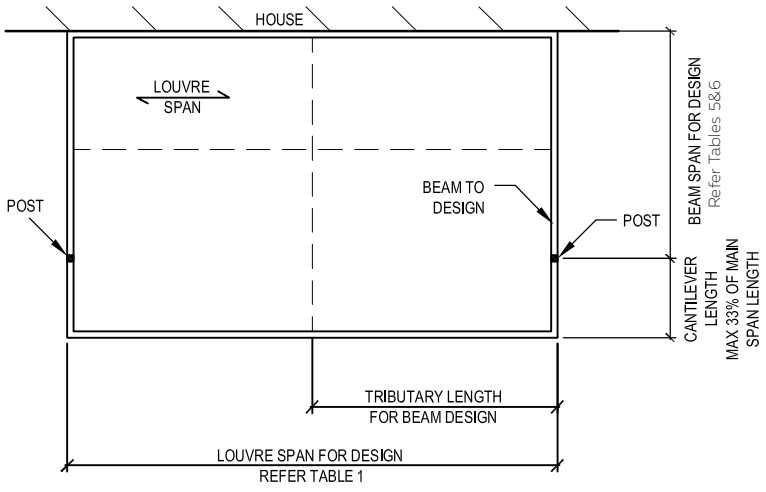


### Front Elevation

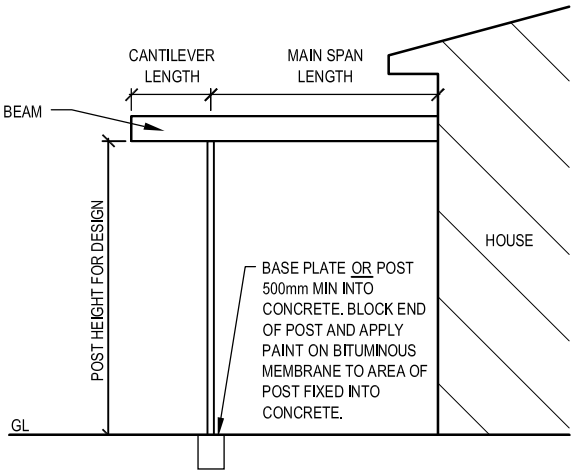



©Louvretec 2025 – All Rights Reserved. Technical specifications subject to change without notice.

## TYPICAL DETAIL | CONTINUOUS BEAM SPAN OPTION 1, FIGURE 3

### Plan view / Louvre and Beam Design

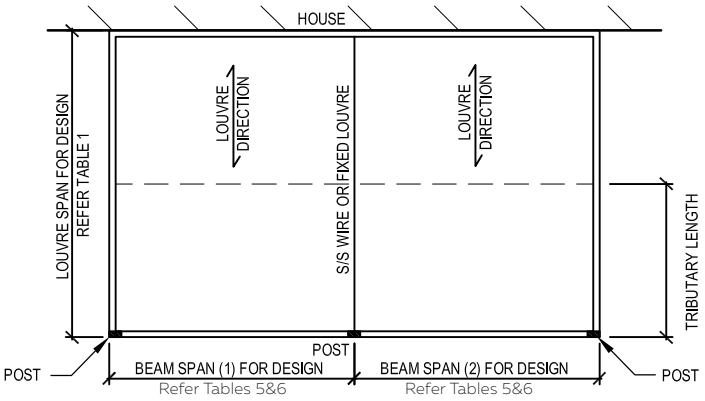


### Front Elevation

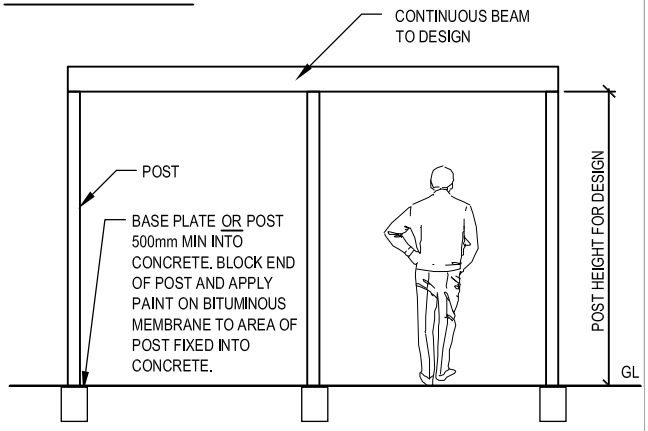


## TYPICAL DETAIL // CONTINUOUS BEAM SPAN, OPTION 2, FIGURE 4

### Plan view / Louvre and Beam Design

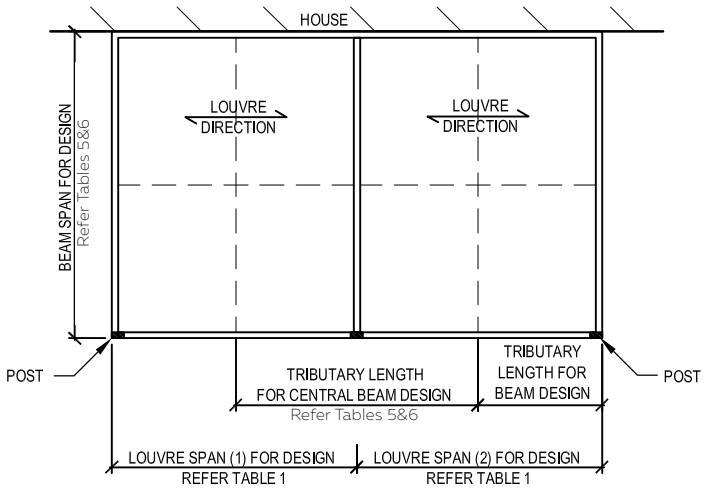


### Front Elevation

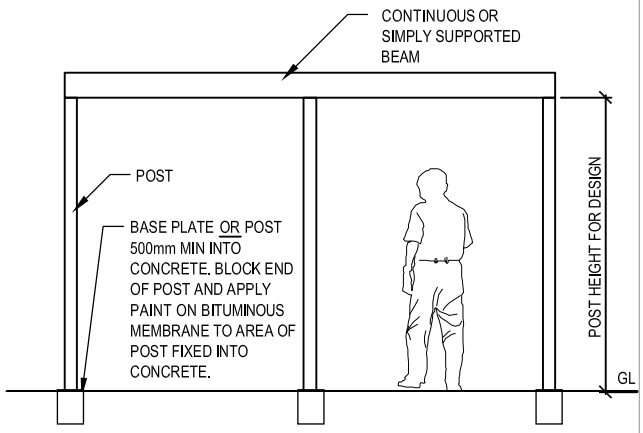



©Louvretec 2025 - All Rights Reserved. Technical specifications subject to change without notice.

## TYPICAL DETAIL // SIMPLY SUPPORTED BEAM, FIGURE 5

**Plan view / Louvre and Beam Design**

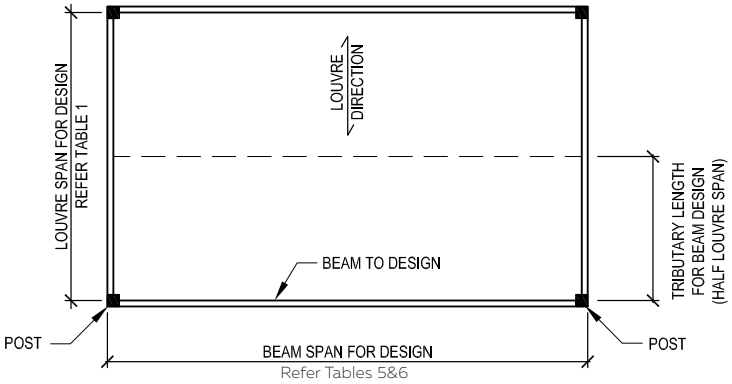


**Front Elevation**

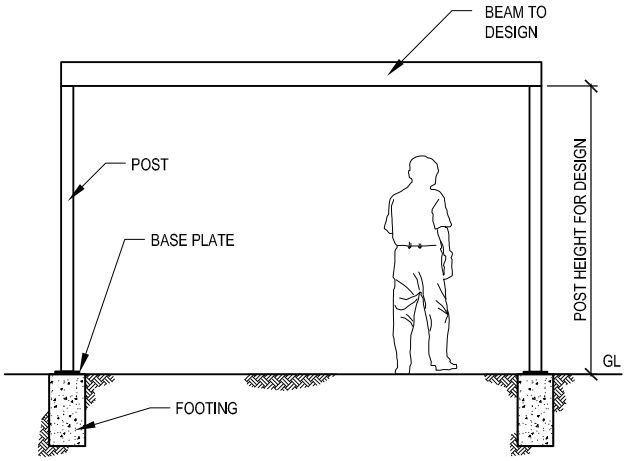


## TYPICAL DETAIL // SIMPLY SUPPORTED EXTERNAL BEAM WITH INTERNAL CONNECTED BEAM

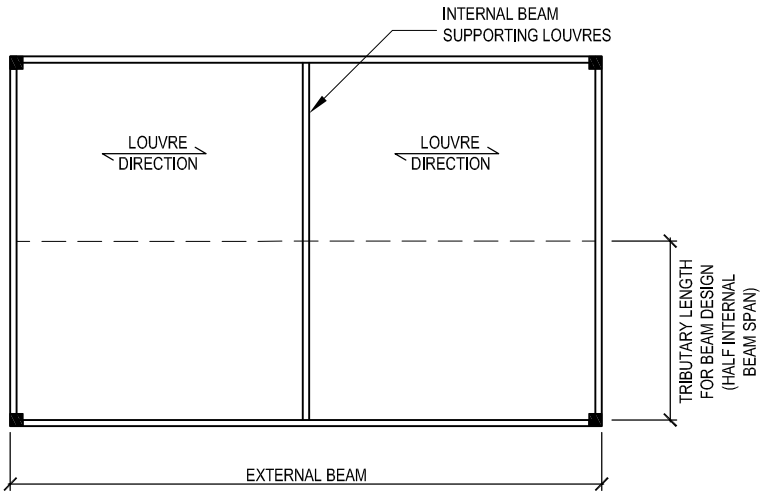


NOTES

1. WHERE AN EXTERNAL BEAM SUPPORTS ONE INTERNAL BEAM THAT SUPPORTS THE LOUVRES, THE EXTERNAL BEAM SHOULD BE DESIGNED USING A LOUVRE TRIBUTARY LENGTH EQUAL TO HALF OF THE LENGTH OF THE INTERNAL BEAM. THE INTERNAL BEAM SHALL BE DESIGNED AS A TYPICAL BEAM SUPPORTING LOUVRES.

2. THE INTERNAL BEAM CAN BE LOCATED ANYWHERE ALONG THE LENGTH OF THE EXTERNAL BEAM.


©Louvretec 2025 – All Rights Reserved. Technical specifications subject to change without notice.

## SPECIFIYING POSTS

To use the following tables you need to know the Tributary Area (Roof Area) on the post, the Tributary Edge Length ($L_E$) and the height of the post. For Tributary Area and Tributary Edge refer to page 19.

### POST LOADS

Wind speeds taken from NZS 3604; 2011, are ultimate limit state wind speeds

L = Low wind speed
M = Medium wind speed
H = High wind speed
VH = Very high wind speed
EH = Extra high wind speed

| | ULS (capacity) | | | | | SLS (deflection) | | | | |
|---|---|---|---|---|---|---|---|---|---|---|
| Wind Zone | L | M | H | VH | EH | L | M | H | VH | EH |
| Factored design wind speed at building (m/s) | 32 | 37 | 44 | 50 | 55 | 27 | 31 | 37 | 42 | 46 |
| Drag pressure on beam (kPa) (for $C_{fig}$ = 1.45) | 0.74 | 0.99 | 1.40 | 1.81 | 2.18 | 0.54 | 0.71 | 1.01 | 1.30 | 1.55 |
| Drag pressure on roof (kPa) (for $C_{fig}$ = 0.04) | 0.02 | 0.03 | 0.04 | 0.05 | 0.06 | 0.01 | 0.02 | 0.03 | 0.04 | 0.04 |


©Louvretec 2025 - All Rights Reserved. Technical specifications subject to change without notice.

## TYPICAL DETAIL | SIMPLY SUPPORTED BEAM (FIGURE 6) AND CANTILEVERED BEAM (FIGURE 7)

FIGURE 6

PLAN VIEW SIMPLY SUPPORTED BEAM

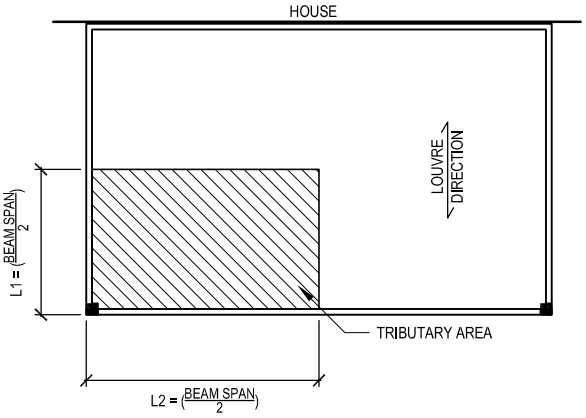


FIGURE 7

PLAN VIEW CANTILEVERED BEAM

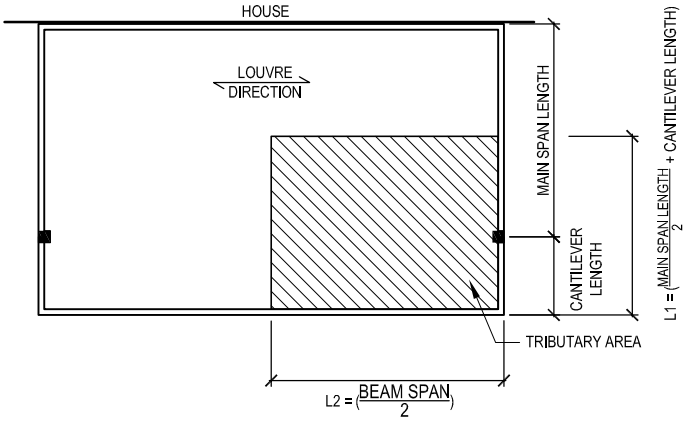


FIGURE 8

PLAN VIEW

L2 is longer than L1
therefore: LE = L2

Refer Note 3.

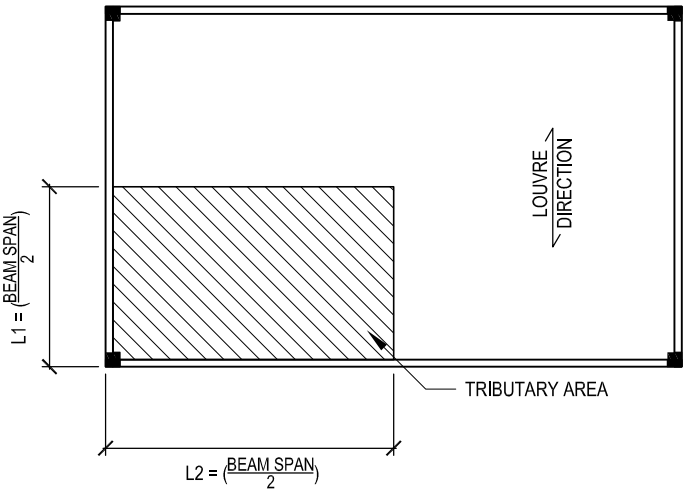


NOTES

1. THE TRIB AREA FOR A POST AND FOOTING IS THE PRODUCT OF HALF THE DISTANCE TO THE ADJACENT SUPPORTS IN EACH DIRECTION ie; L1 X L2 (SEE FIG.6)
2. WHERE A POST SUPPORTS A CANTILEVER, CONSIDER FOR THE FULL CANTILEVER LENGTH (SEE FIG.7)
3. TRIBUTARY EDGE LENGTH ($L_E$) IS USED TO SELECT POST SIZE.
   FOR A STRUCTURE ATTACHED TO A HOUSE, $L_E$ = L1(PERPENDICULAR TO HOUSE)
   FOR A FREE STANDING STRUCTURE, $L_E$ = THE LONGER OF L1 & L2 (SEE FIG.8)


©Louvretec 2025 – All Rights Reserved. Technical specifications subject to change without notice.

## TYPICAL DETAIL | CONTINUOUS BEAM SPAN OPTION 2

### PLAN VIEW POST FOOTING & POST DESIGN

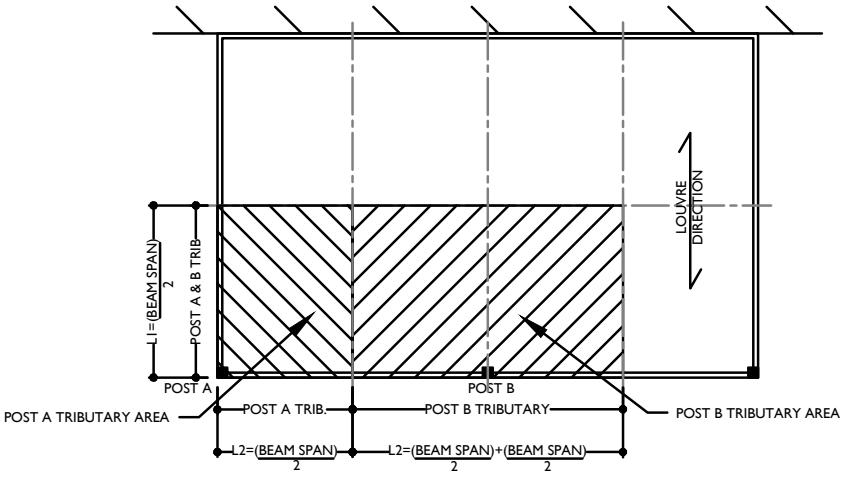


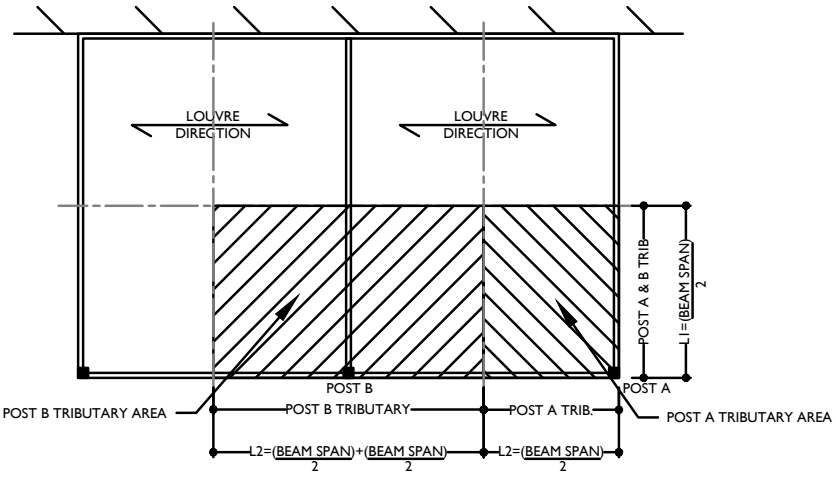






©Louvretec 2025 – All Rights Reserved. Technical specifications subject to change without notice.


URBNSURF

STUDIO89 LTD
CONSULTING ENGINEERS

## LOW WIND ZONE: POST HEIGHT = 2.4m

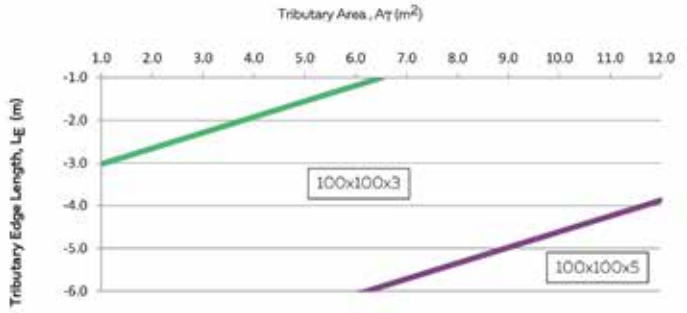


## LOW WIND ZONE: POST HEIGHT = 2.7m

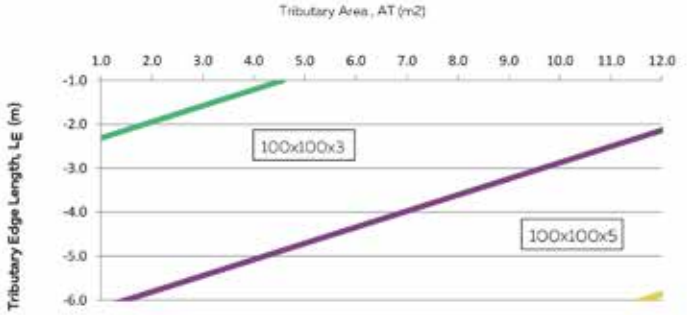


## LOW WIND ZONE: POST HEIGHT = 3m

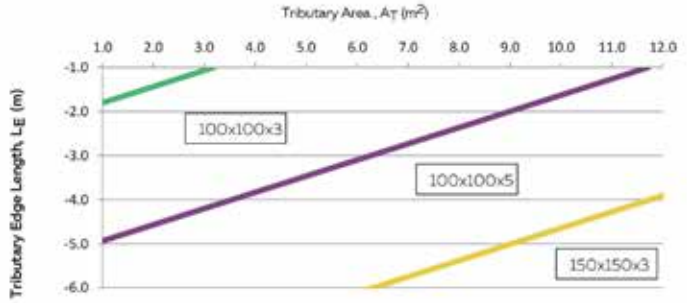


## LOW WIND ZONE: POST HEIGHT = 3.5m

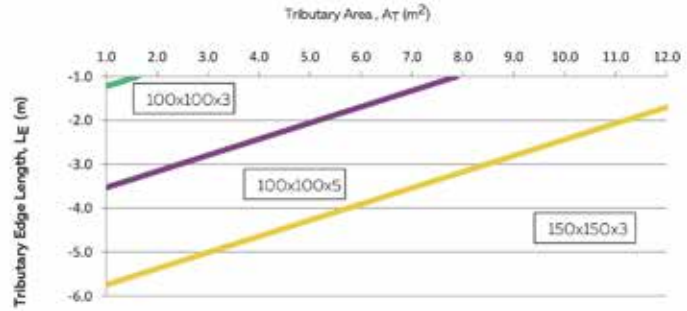



©Louvretec 2025 – All Rights Reserved. Technical specifications subject to change without notice.

STUDIO89 LTD
CONSULTING ENGINEERS

## MEDIUM WIND ZONE: POST HEIGHT = 2.4m

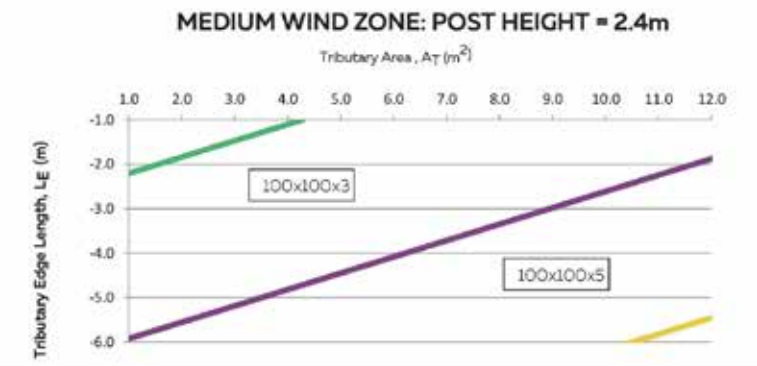


## MEDIUM WIND ZONE: POST HEIGHT = 2.7m

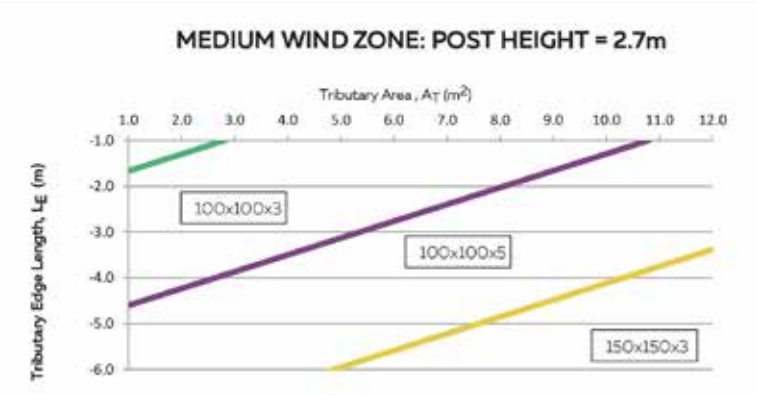


## MEDIUM WIND ZONE: POST HEIGHT = 3m

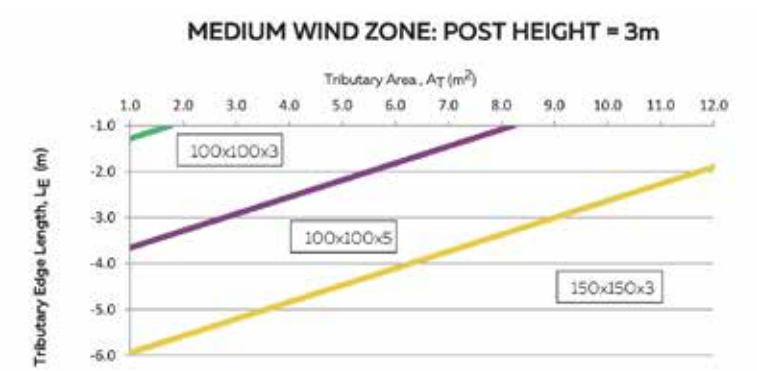


## MEDIUM WIND ZONE: POST HEIGHT = 3.5m

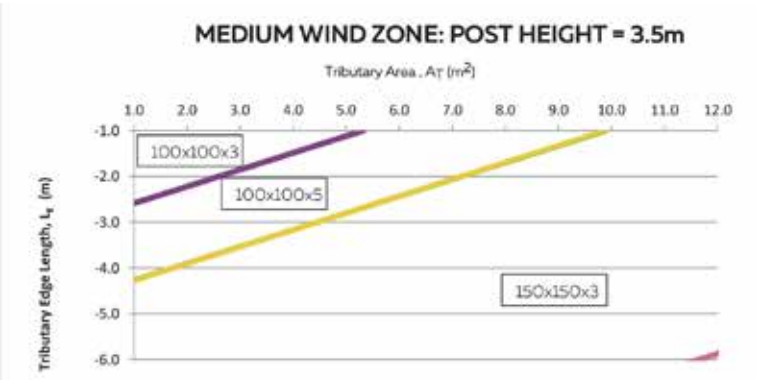



©Louvretec 2025 – All Rights Reserved. Technical specifications subject to change without notice.

STUDIO89 LTD
CONSULTING ENGINEERS

## HIGH WIND ZONE: POST HEIGHT = 2.4m

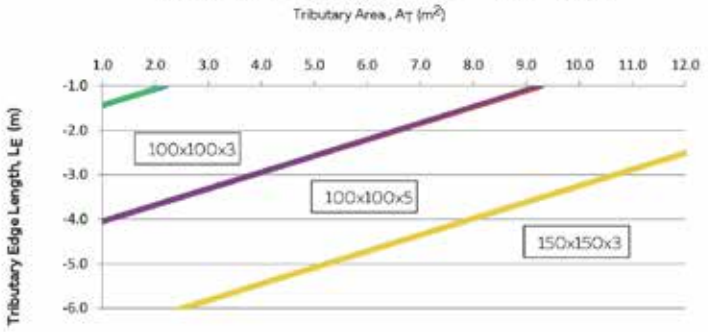


## HIGH WIND ZONE: POST HEIGHT = 2.7m

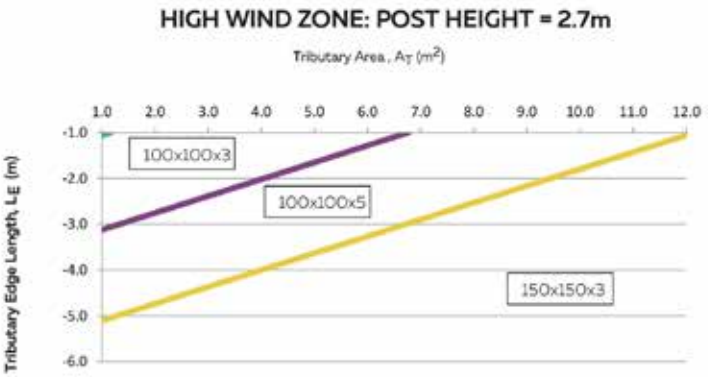


## HIGH WIND ZONE: POST HEIGHT = 3m

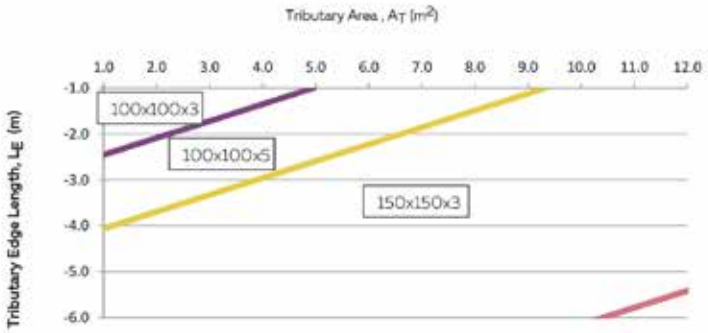


## HIGH WIND ZONE: POST HEIGHT = 3.5m

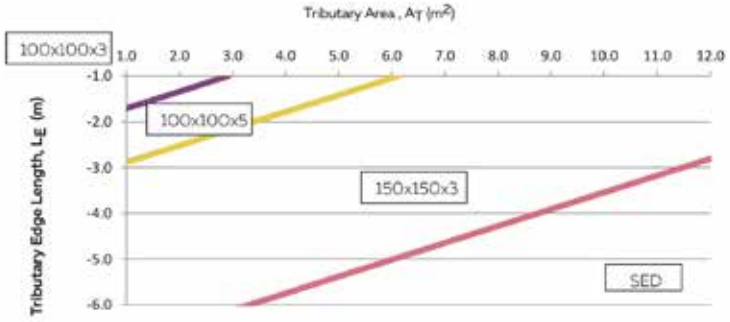



©Louvretec 2025 – All Rights Reserved. Technical specifications subject to change without notice.

STUDIO89 LTD
CONSULTING ENGINEERS

## VERY HIGH WIND ZONE: POST HEIGHT = 2.4m

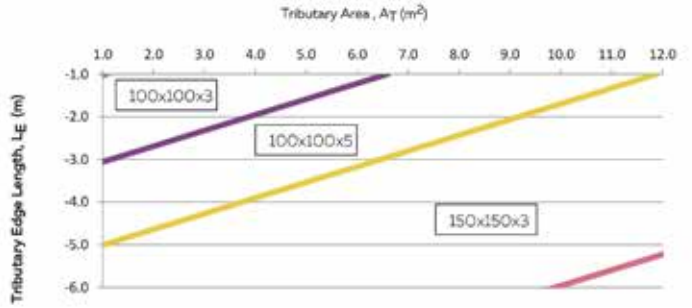


## VERY HIGH WIND ZONE: POST HEIGHT = 2.7m

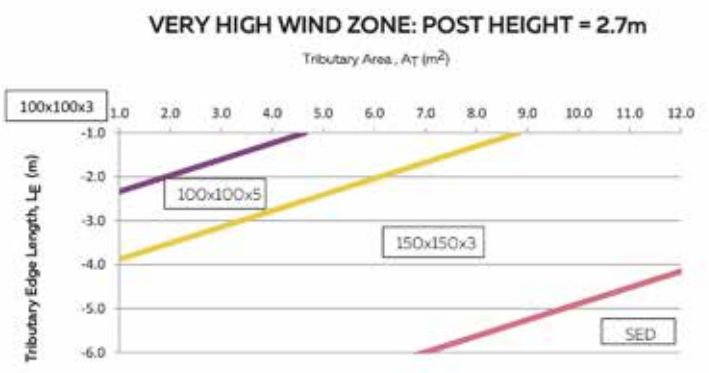


## VERY HIGH WIND ZONE: POST HEIGHT = 3m

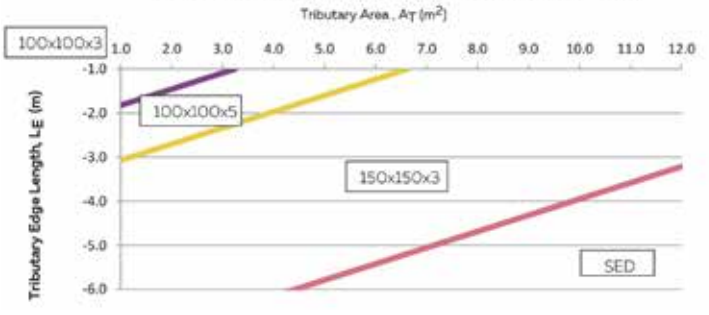


## VERY HIGH WIND ZONE: POST HEIGHT = 3.5m

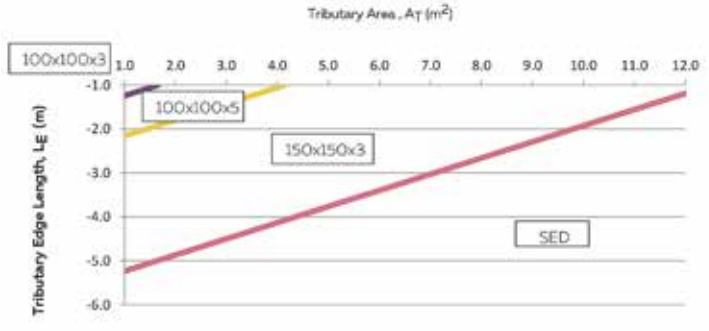



©Louvretec 2025 – All Rights Reserved. Technical specifications subject to change without notice.

STUDIO89 LTD
CONSULTING ENGINEERS

## EXTRA HIGH WIND ZONE: POST HEIGHT = 2.4m

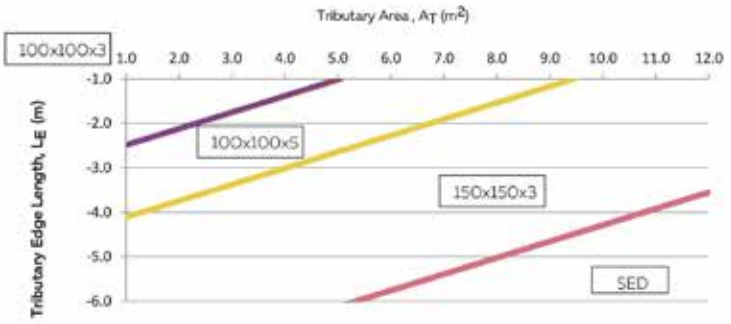


## EXTRA HIGH WIND ZONE: POST HEIGHT = 2.7m

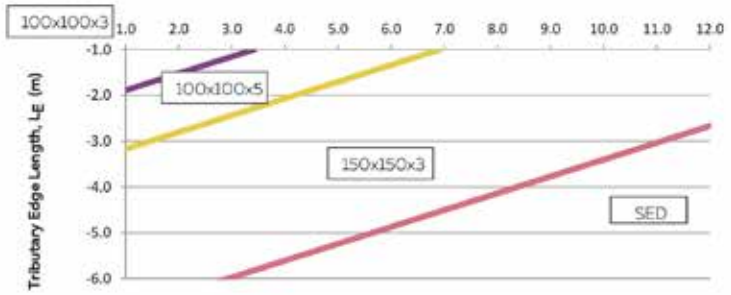


## EXTRA HIGH WIND ZONE: POST HEIGHT = 3m

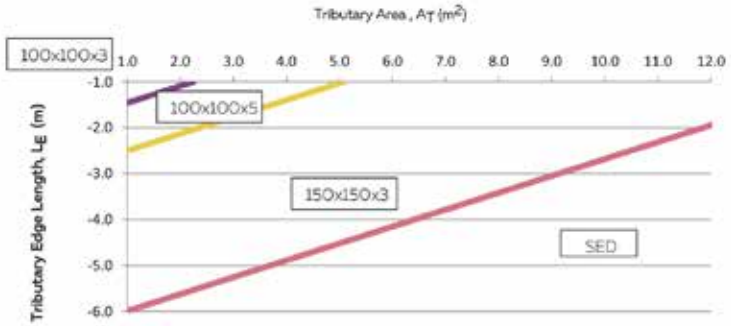


## EXTRA HIGH WIND ZONE: POST HEIGHT = 3.5m

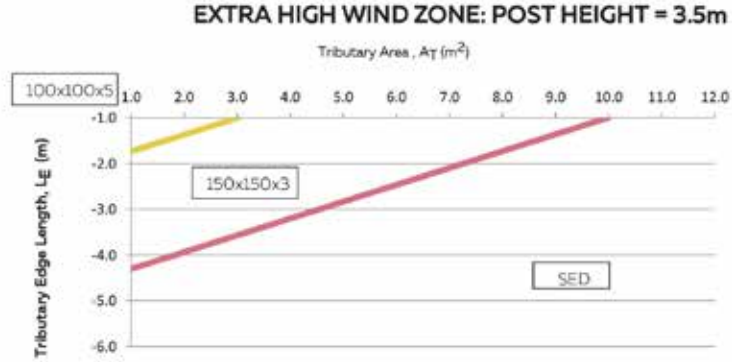



©Louvretec 2025 – All Rights Reserved. Technical specifications subject to change without notice.

STUDIO89 LTD
CONSULTING ENGINEERS

## Post Footing Calculations

***GOOD GROUND***

**Ground conditions are considered a minimum of "good ground" as per NZS3604, within minimum soil properties as follow:**

Geotechnical ultimate bearing capacity = 300kPa (apply 0.5 safety factor)

Undrained shear strength = 100kPa (apply 0.5 safety factor)

**Geotechnical ultimate skin friction capacity = 20kPa (apply 0.5 safety factor)**

**Questionable ground conditions must be reviewed by Engineer**

- If Louvre frame is supported by building on less than 2 sides, **uplift AND bracing** must be considered for Footing Calculations (Tables 1a, 1b & 2).
  If Louvre frame is supported by building on 2 or more sides, **uplift** only needs to be considered (Tables 1a & 1b only).

**TABLE 1a MINIMUM CONCRETE VOLUME FOR ROOF TRIBUTARY ROOF AREA ON POST TO RESIST *UPLIFT***

| | Concrete Volume Required ($m^3$) | | | | |
|---|---|---|---|---|---|
| Wind Zone: | L | M | H | VH | EH |
| Tributary Area ($m^2$) | | | | | |
| 1.0 | 0.03 | 0.04 | 0.06 | 0.08 | 0.10 |
| 2.0 | 0.06 | 0.09 | 0.12 | 0.16 | 0.20 |
| 3.0 | 0.09 | 0.13 | 0.19 | 0.25 | 0.30 |
| 4.0 | 0.12 | 0.17 | 0.25 | 0.33 | 0.40 |
| 5.0 | 0.15 | 0.21 | 0.31 | 0.41 | 0.50 |
| 6.0 | 0.18 | 0.26 | 0.37 | 0.49 | 0.60 |
| 7.0 | 0.22 | 0.30 | 0.44 | 0.57 | 0.70 |
| 8.0 | 0.25 | 0.34 | 0.50 | 0.65 | 0.80 |
| 9.0 | 0.28 | 0.38 | 0.56 | 0.74 | 0.90 |

**DESIGN PROCEDURE**

(1) Determine the tributary area on post (determined previously for post design)

(2) From Table 1a, determine the minimum concrete volume to resist uplift based on tributary area.

(3) From Table 1b, determine the Footing Dimensions required for minimum volume calculated in (2). If bracing is required to be considered, please follow steps (4) and (5) below.

(4) From Table 2, determine Footing Dimensions based on the post size selected. For ease of comparing, select same Footing Type as selected in (3)

(5) Please use maximum of dimensions from (3) and (4)

**TABLE 1b FOOTING DIMENSIONS REQUIRED FOR PARTICULAR VOLUMES FOR *UPLIFT* RESISTANCE**

| | ROUND PILES | | | | SQUARE PADS | |
|---|---|---|---|---|---|---|
| Volume ($m^3$) | 300 diameter | 400 diameter | 450 diameter | 600 diameter | Square pad 300mm deep | Square pad 600mm deep |
| | minimum depth (mm) | | | | minimum dimension (mm) | |
| 0.1 | 700 | 650 | 600 | 550 | 600 | 400 |
| 0.2 | 950 | 800 | 750 | 650 | 800 | 600 |
| 0.3 | 1150 | 950 | 850 | 700 | 1000 | 700 |
| 0.4 | 1350 | 1100 | 1000 | 800 | 1150 | 800 |
| 0.6 | 1800 | 1400 | 1250 | 1000 | 1400 | 1000 |
| 0.8 | 2250 | 1700 | 1550 | 1200 | 1650 | 1150 |
| 1.0 | 2650 | 2000 | 1800 | 1400 | 1850 | 1300 |

NB: Round piles depths are calculated including skin friction so final concrete volume will differ to that in first column.

**TABLE 2 MINIMUM FOOTING SIZES REQUIRED FOR *BRACING* OF EACH POST SIZE**

| | ROUND PILES | | | | SQUARE PADS | |
|---|---|---|---|---|---|---|
| Post Size | 300 diameter | 400 diameter | 450 diameter | 600 diameter | Square pad 300mm deep | Square pad 600mm deep |
| | minimum depth (mm) | | | | minimum dimension (mm) | |
| 100x100x3 | 1100 | 1000 | 1000 | 900 | 1000 | 800 |
| 100x100x5 | - | 1100 | 1100 | 1000 | 1200 | 900 |
| 150x150x3 | - | 1300 | 1200 | 1200 | 1400 | 1100 |
| 100x100x4 SHS | - | 1300 | 1200 | 1200 | 1400 | 1100 |

CONCRETE TO BE MINIMUM 20MPa


©Louvretec 2025 – All Rights Reserved. Technical specifications subject to change without notice.

## SQUARE PAD FOOTINGS 300 DEEP

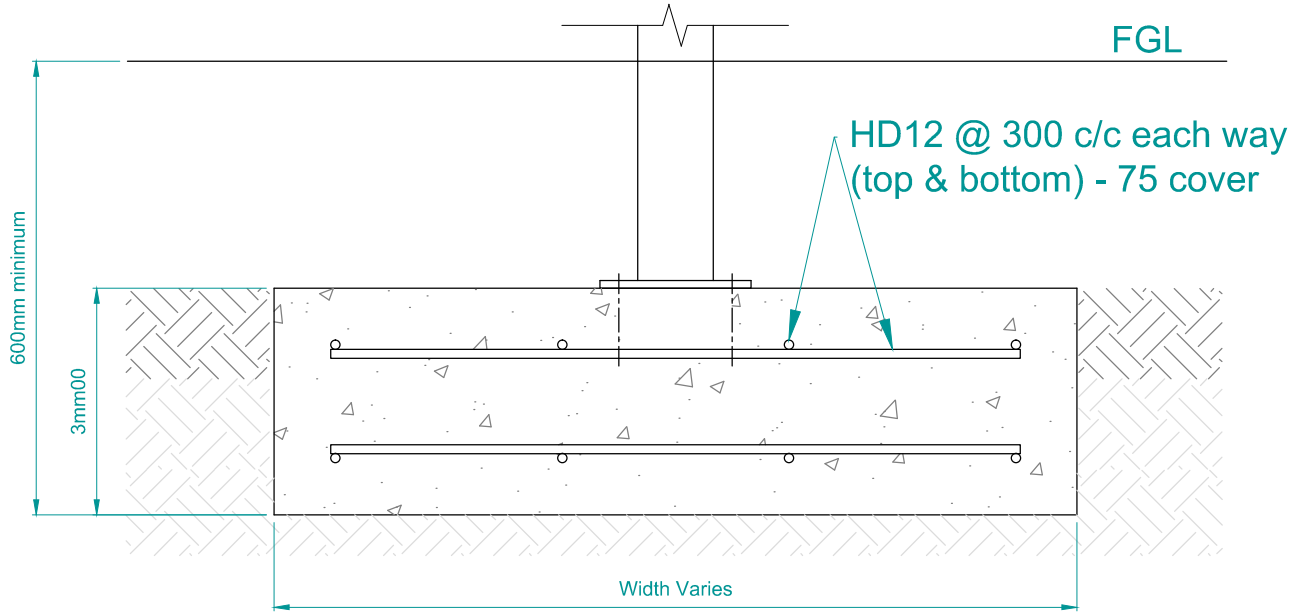


## SQUARE PAD FOOTINGS 600 DEEP

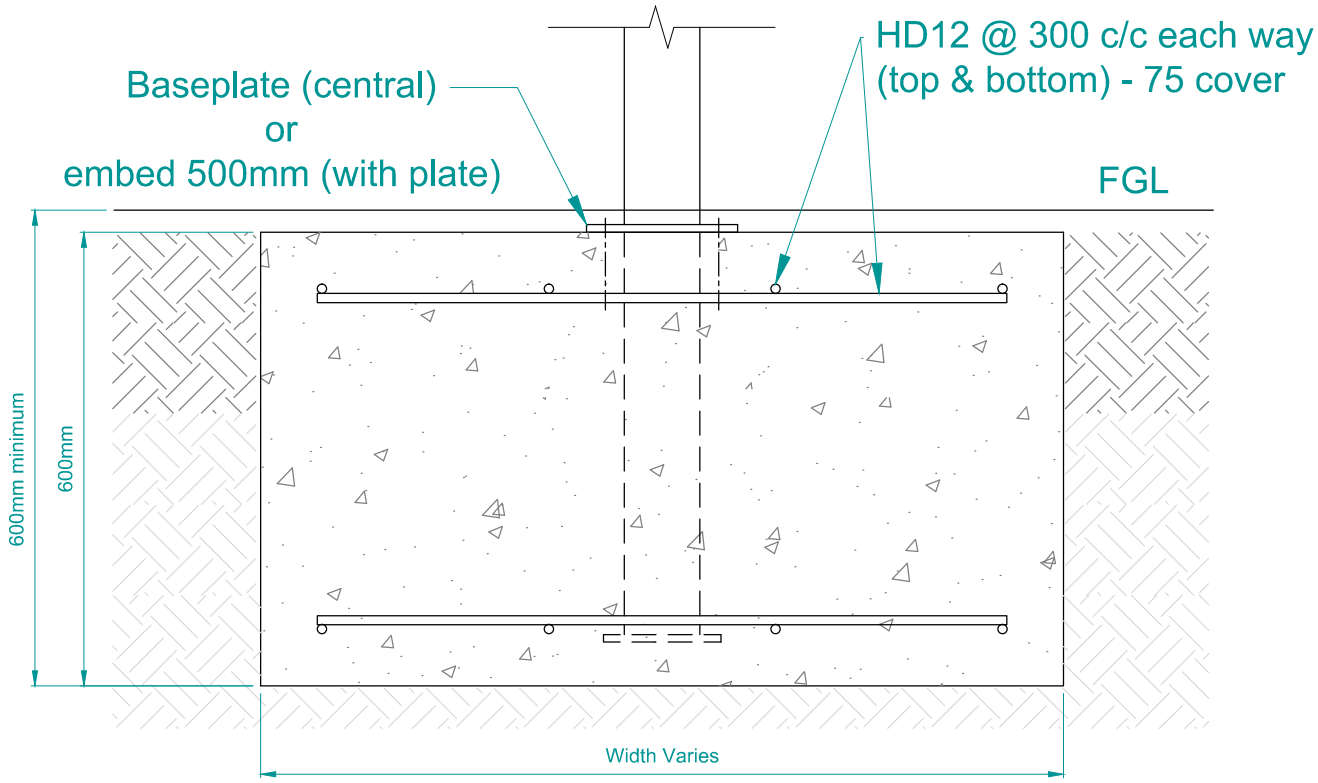






©Louvretec 2025 – All Rights Reserved. Technical specifications subject to change without notice.

ROUND PILE FOOTINGS

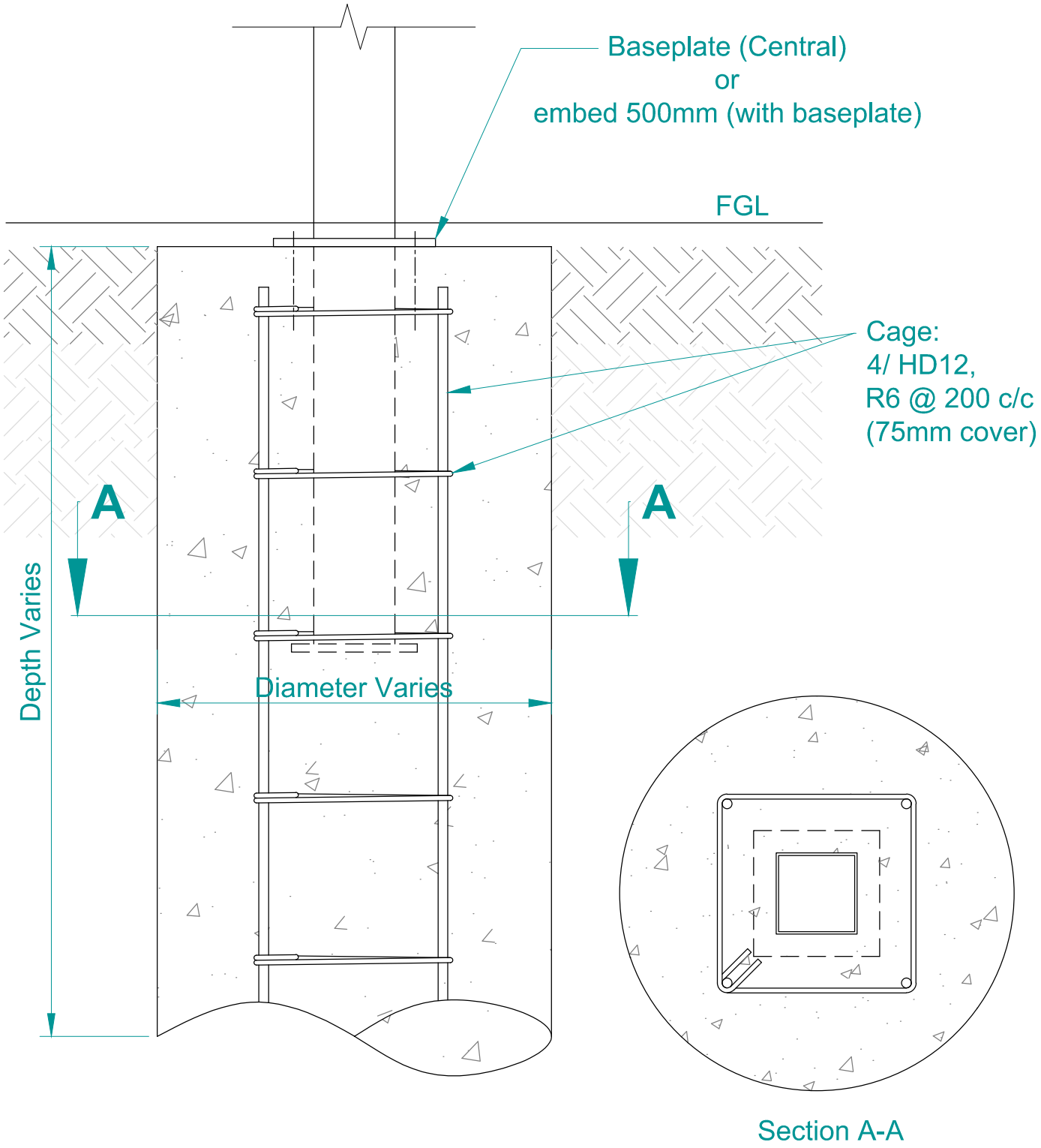



©Louvretec 2025 – All Rights Reserved. Technical specifications subject to change without notice.

STUDIO89 LTD
CONSULTING ENGINEERS

TYPICAL DETAIL BASE PLATE SIZES FOR VARIOUS POSTS, SUBSTRATES & FIXINGS

## 100X100 ALUMINIUM POST BASE PLATE CONCRETE SUBSTRATE

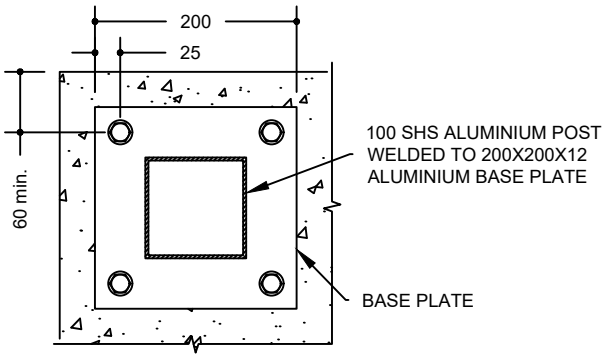


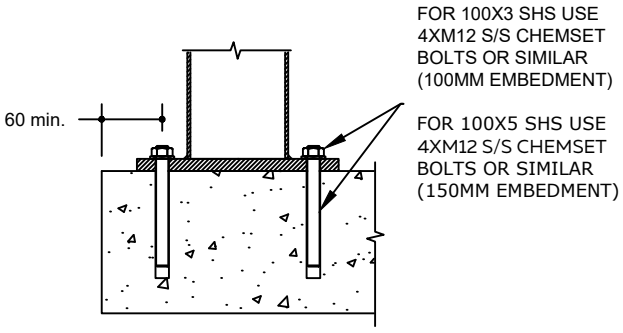


## 150X150 ALUMINIUM POST BASE PLATE CONCRETE SUBSTRATE

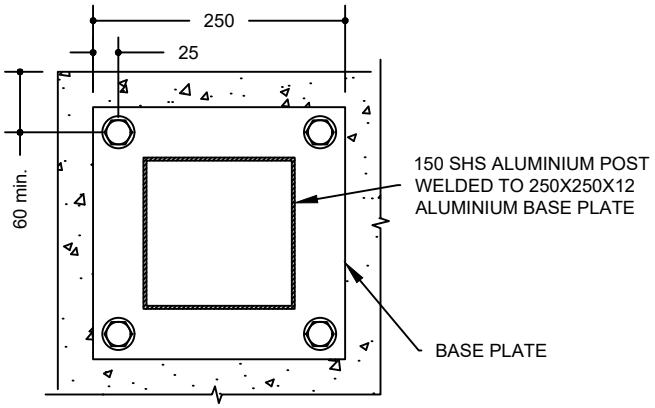


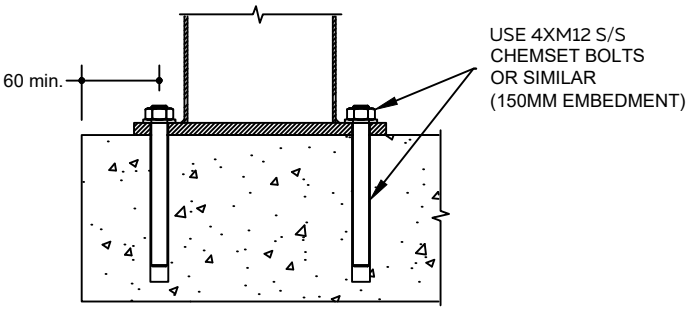


## 100X100 ALUMINIUM POST BASE PLATE TIMBER SUBSTRATE

| | Embedment | | | |
|---|---|---|---|---|
| Type | 100x3 SHS | 100x4 SHS | 100x5 SHS | 150x3 SHS |
| Coach | 120 | 265 | 190 | 265 |
| Spax | 120 | 260 | 190 | 260 |

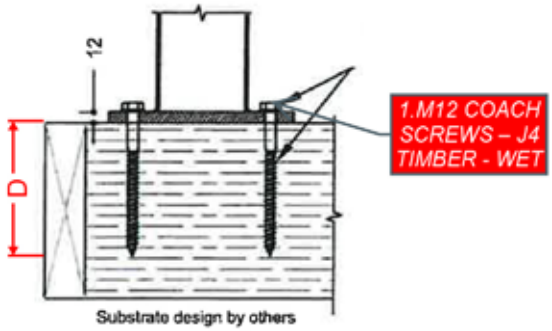


## 150X150 ALUMINIUM POST BASE PLATE TIMBER SUBSTRATE

| | Embedment | | | |
|---|---|---|---|---|
| Type | 100x3 SHS | 100x4 SHS | 100x5 SHS | 150x3 SHS |
| Coach | 120 | 265 | 190 | 265 |
| Spax | 120 | 260 | 190 | 260 |

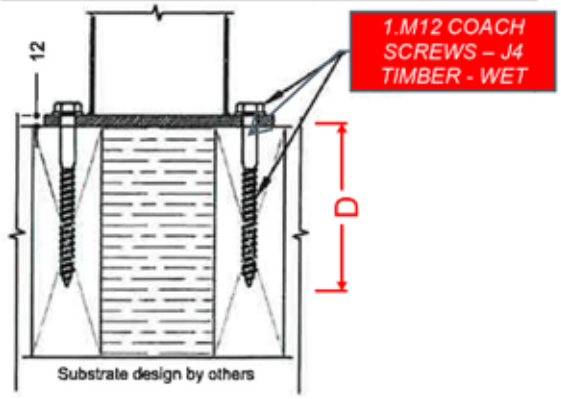


NOTE: ALL POST TO BASE PLATE WELDS MUST BE FULL PENETRATION BUTT WELDS ALL AROUND



LouvreTec®



©Louvretec 2025 – All Rights Reserved. Technical specifications subject to change without notice.

STUDIO89 LTD
CONSULTING ENGINEERS

## SNOW LOADINGS. AS REQUIRED BY NZS3604:2011 (SECTION 15)

Where a louvre roof forms part of a lower roof meeting an upper wall and the exposed height of the upper wall is greater than 0.6mm, the roof is defined as an abutting roof (similar to NZS3604:2011 15.3). In this situation, the louvre spans and beam spans determined from the Louvretec Tables shall be multiplied by 0.8.

FIGURE 9

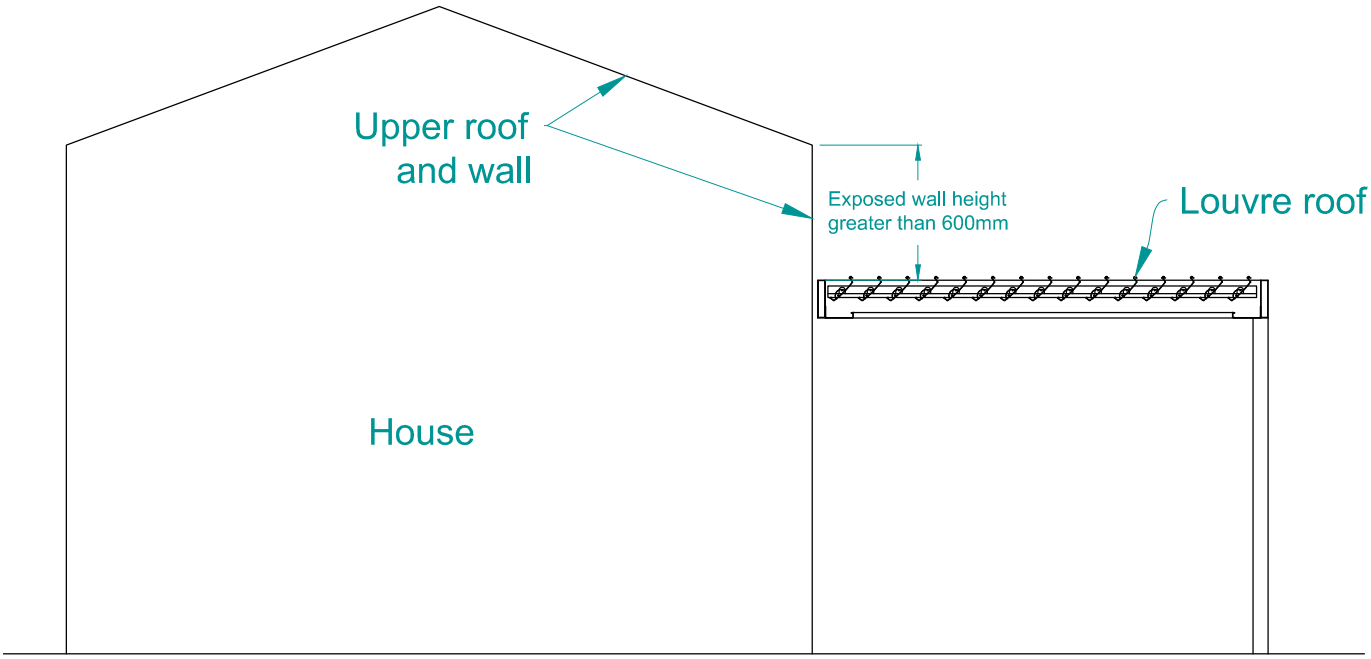


## STANDARDS NZ 1.5 AND 2.5 kPa SNOW LOADING ZONES NZS 3604:2011

For information about snow zones in New Zealand please see Figure 15.1 from NZS 3604:2011 Timber Framed Buildings. Wind speeds and snow loads must always be considered together. The lesser span taking precedence.

## OPENING OR RETRACT ROOF BLADE

*For larger spans, typically alpine and coastal locations

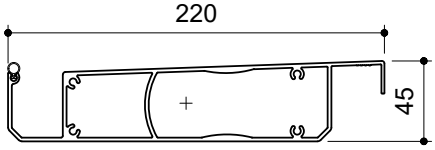


Louvretec 220/45 opening alpine* roof
(retract compatible)

| SNOW LOAD | LOUVRE ROOF SPANS (mm) | |
|---|---|---|
| | 1kPa | 5000 |
| | 1.5kPa | 5000 |
| | 2kPa | 5000 |
| | 3kPa | 4200 |
| | 3.3kPa | 4000 |


©Louvretec 2025 – All Rights Reserved. Technical specifications subject to change without notice.

SECTION 15 1.5 AND 2.0 kPA SNOW LOADING NZS3604.2011

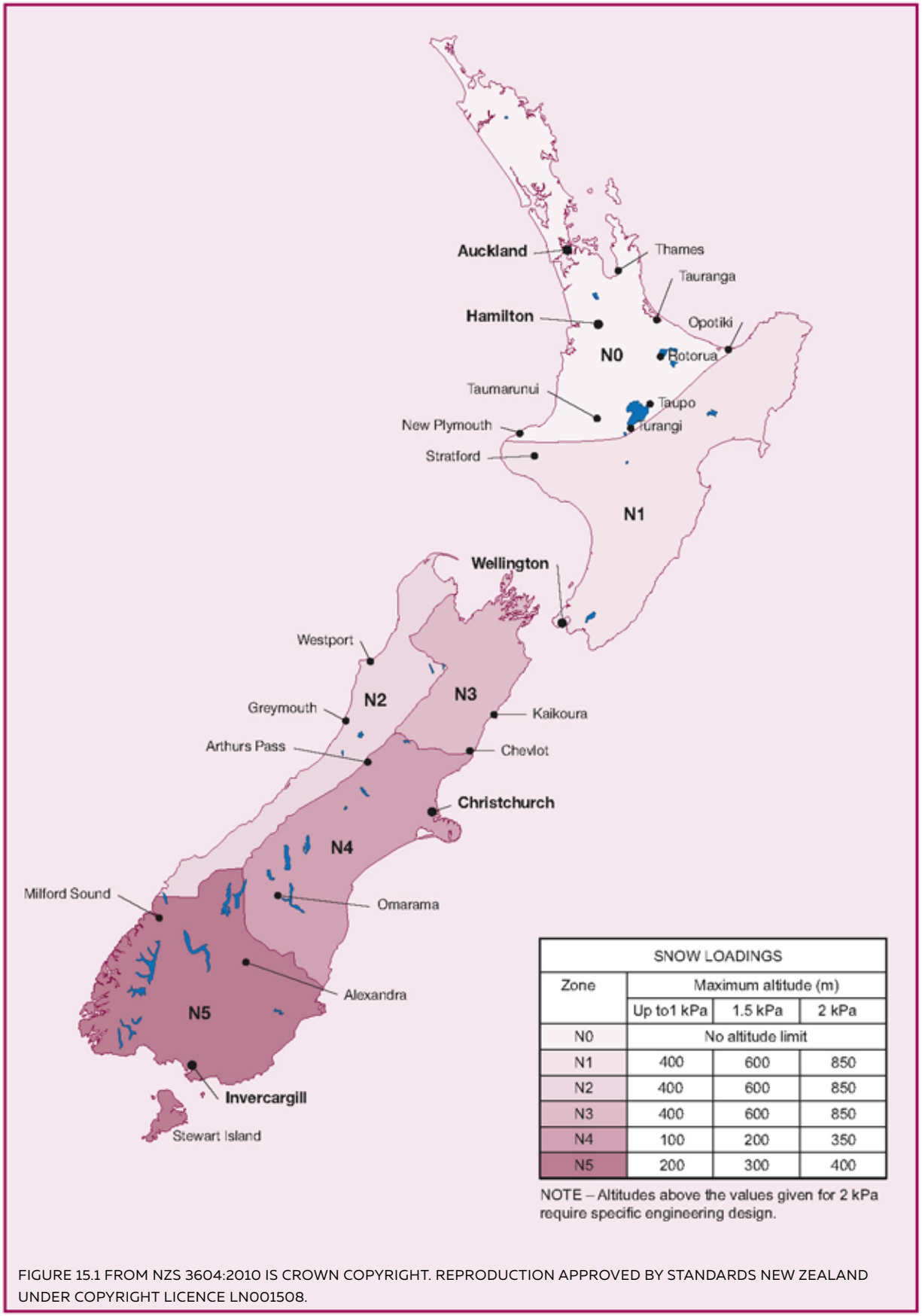


| SNOW LOADINGS | | | |
|---|---|---|---|
| Zone | Maximum altitude (m) | | |
| | Up to1 kPa | 1.5 kPa | 2 kPa |
| N0 | No altitude limit | | |
| N1 | 400 | 600 | 850 |
| N2 | 400 | 600 | 850 |
| N3 | 400 | 600 | 850 |
| N4 | 100 | 200 | 350 |
| N5 | 200 | 300 | 400 |

NOTE – Altitudes above the values given for 2 kPa require specific engineering design.

FIGURE 15.1 FROM NZS 3604:2010 IS CROWN COPYRIGHT. REPRODUCTION APPROVED BY STANDARDS NEW ZEALAND UNDER COPYRIGHT LICENCE LN001508.





©Louvretec 2025 – All Rights Reserved. Technical specifications subject to change without notice.



# 14. ELECTRICAL WIRING DIAGRAMS

## OPENING ROOFS, SUN LOUVRES & OUTDOOR BLINDS


| | |
|---|---|
| Wiring Diagrams Overview | 14.03 |
| Remote Control Options | 14.04 - 14.05 |
| Off the Grid - Solar Powered Motor & Remote | 14.06 |
| Single WT Motor with HW Switch | 14.07 |
| Single RTS with Somfy Remote | 14.08 |
| Single RTS with Somfy Remote & Rain Sensor | 14.09 |
| Multiple RTS with Somfy Remote | 14.10 |
| Multiple RTS with Somfy Remote & Rain Sensor | 14.11 |
| Multiple RTS Motor (Opening Roof, Outdoor Blind & Panel) & Remote | 14.12 |
| Multiple RTS Motor (Opening Roof, Outdoor Blind & Panel) & Remote & Rain Sensor | 14.13 |
| Multiple RTS Motor (Opening Roof, Outdoor Blinds) & Remote | 14.14 |
| Multiple RTS Motor (Opening Roof, Outdoor Blinds) & Remote & Rain Sensor | 14.15 |
| Single RTS Motor & Tahoma | 14.16 |
| Single RTS & Connexoon Window RTS | 14.17 |
| Single WT BMS | 14.18 |
| Single WT BMS & Rain Sensor | 14.19 |
| Multiple WT BMS | 14.20 |
| Multiple WT BMS & Rain Sensor | 14.21 |
| Single RTS with Remote & BMS Dry Contact Transmitter | 14.22 |


## OUTDOOR LIGHTING & HEATING


| | |
|---|---|
| Single RTS with Somfy Remote & Gutter Lighting | 14.23 |
| Single RTS with Somfy Remote, Gutter Lighting & Rain Sensor | 14.24 |
| Multiple RTS with Somfy Remote & Gutter Lighting | 14.25 |
| Multiple RTS with Somfy Remote, Gutter Lighting & Rain Sensor | 14.26 |
| Single RTS with Somfy Remote & Down Lighting | 14.27 |
| Single RTS with Somfy Remote, Down Lighting & Rain Sensor | 14.28 |
| Multiple RTS with Somfy Remote & Down Lighting | 14.29 |
| Multiple RTS with Somfy Remote, Down Lighting & Rain Sensor | 14.30 |
| Single WT BMS & Gutter Lighting | 14.31 |
| Single WT BMS, Gutter Lighting & Rain Sensor | 14.32 |
| Multiple WT BMS & Gutter Lighting | 14.33 |
| Multiple WT BMS, Gutter Lighting & Rain Sensor | 14.34 |
| Single 2.4-3.4KW - On/Off Heater | 14.35 |
| Single 4.5KW - On/Off Heater | 14.36 |
| Multiple 2.4-3.4KW - On/Off Heater | 14.37 |
| Single 2.4-3.4KW - Dimmer Heater | 14.38 |
| Single 4.5KW - Dimmer Heater | 14.39 |
| Multiple 2.4-3.4KW - Dimmer Heater | 14.40 |


## RETRACT ROOFS


| | |
|---|---|
| Retract Roof Info Page | 14.41 |
| Single Retract Roof with Teleco Remote | 14.42 |
| Single Retract Roof with Teleco Remote & Rain Sensor | 14.43 |
| Multiple Retract Roof with Teleco Remote | 14.44 |
| Multiple Retract Roof with Teleco Remote & Rain Sensor | 14.45 |
| Single Retract BMS | 14.46 |
| Multiple Retract BMS | 14.47 |
| Multiple Retract & Daisy App | 14.48 |
| Single Retract Roof with Teleco Remote & Gutter Lighting | 14.49 |
| Single Retract Roof with Teleco Remote, Gutter Lighting & Rain Sensor | 14.50 |
| Multiple Retract Roof with Teleco Remote & Gutter Lighting | 14.51 |
| Multiple Retract Roof with Teleco Remote, Gutter Lighting & Rain Sensor | 14.52 |
| Multiple RTS, Remote & Fire System | 14.53 |
| Remote Control Instruction Cards | 14.54 - 14.55 |


©Louvretec 2025 – All Rights Reserved. Technical specifications subject to change without notice.









©Louvretec 2025 – All Rights Reserved. Technical specifications subject to change without notice.



SOMFY TUBULAR MOTOR

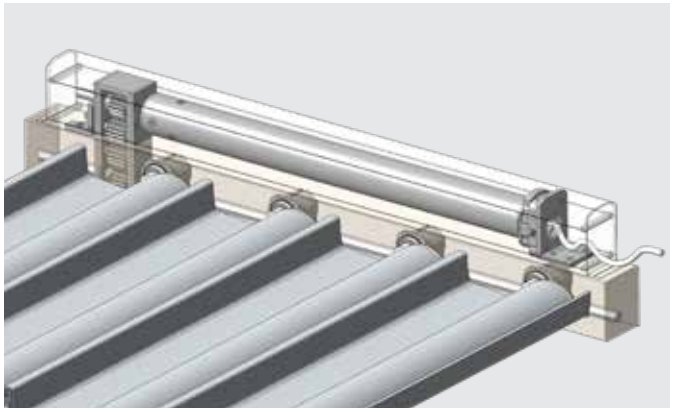

SOMFY TUBULAR MOTOR INSITU

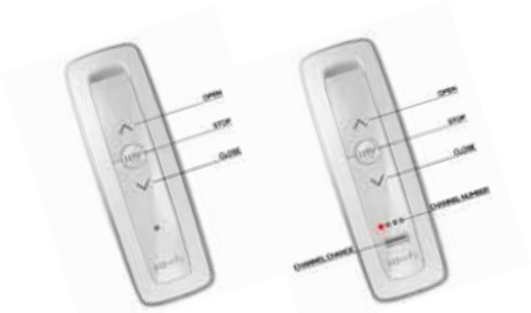

SOMFY RTS CONTROLLERS
SINGLE & MULTIPLE





SOMFY TELIS 16 CHANNEL RETRACT ROOF REMOTE

# WIRING DIAGRAMS

## Overview

The Wiring Diagrams shown in this Design Manual cover a wide range of typical Louvretec motorised and electrical installations.

They provide the specific wiring details as required by architects, designers, builders and specifiers when planning Louvretec installations, and of course for electricians when providing connections.

Please contact your nearest Louvretec Dealer to discuss any customised options not currently shown.

## Important Safety Instructions for Installation

An incorrect installation could lead to serious injury. Follow all of these instructions as well as those supplied with the motor & controls.

- Install an Omnipolar Isolation Switch upstream with a minimum contact opening space of 3mm
- All cabling must be protected from UV and physical stress (by others)
- Motors must be installed and programmed by competent installers
- For products necessary for the safe functioning of the motorised installation, refer to your nearest Louvretec Dealer
- Use only approved accessories
- Use only approved transmitters with the RTS Motors
- Before carrying out any form of maintenance, isolate the power to the motor and/or controls
- Examine the installation at regular intervals. Do not use the installation until any faults have been rectified
- Should you have any questions regarding the installation of Motors & Controls, contact your nearest Louvretec Dealer

©Louvretec 2025 – All Rights Reserved. Technical specifications subject to change without notice.

# CURRENT REMOTE CONTROL OPTIONS FOR OPENING ROOFS & OTHER LOUVRETEC MOTORISED PRODUCTS

## Remote options

Remote Control technology is constantly changing and upgrading. Please discuss with your local Louvretec Dealer and view our website for current updates.

Key: Remote Compatibility

opening roofs
outdoor blinds
louvretec retract (ADI Retract Technology)
Lighting
sun louvres
Heating

| | |
|---|---|
| **Situo 1 & Smoove 1 Wall Switch**<br>The Situo 1 Remote by Somfy is a one-channel handheld remote using Radio Technology Somfy (RTS).<br>Smoove is a wireless wall mounted switch providing the same functionality as a remote.<br>Perfect for controlling a single Opening Roof. |  |
| **Situo 5 & Smoove 4 Wall Switch**<br>The Situo 5 by Somfy is a five-channel handheld remote using Radio Technology Somfy (RTS). Perfect for controlling a group of motorised Louvretec products (excluding the Retract Roof).<br>Smoove 4 is a wireless wall switch providing the same functionality as a remote but with 4 channels.<br>With the addition of the BST11 Bridge, both remotes can control Lighting and Heating. |  |
| **Telis 16**<br>The Telis 16 is a 16-channel handheld remote using Radio Technology Somfy (RTS). Made to control a larger group of motorised Louvretec products (excluding the Retract Roof).<br>The addition of a BST 11 Bridge allows this remote to control Lighting & Heating. |  |
| **Noon Duo**<br>The Noon Duo is a 9-channel handheld remote.<br>The Noon Duo allows control for Louvretec Retract Roofs, Lighting and Heating. |  |
| **Daisy App**<br>Daisy is an app by Teleco that allows the control of Louvretec Retract Roofs, Lighting and Heating. Download the free app and install a Daisy Box which communicates with your devices via radio signal. |  |
| **Solar Powered** No power connection required, the solar powered motor can be controlled by a wireless handheld remote or a Smart Home solution. Battery has a 45-day life cycle based on two open/close cycles/ day. Algorithms for power management allow for battery charging without direct sunlight. | <br>SOLAR POWER OPTION FOR SPIRAL PIVOT OPENING ROOFS |


©Louvretec 2025 – All Rights Reserved. Technical specifications subject to change without notice.

# CURRENT REMOTE CONTROL OPTIONS FOR OPENING ROOFS & OTHER LOUVRETEC MOTORISED PRODUCTS

## Remote options

Remote Control technology is constantly changing and upgrading. Please discuss with your local Louvretec Dealer and view our website for current updates.

Key: Remote Compatibility

opening roofs
outdoor blinds By Louvretec
louvretec retract ADI Retract Technology
Lighting
sun louvres By Louvretec
Heating

### Connexoon

Connexoon is an app by Somfy that allows the control of Louvretec Opening Roofs from your device. The addition of a BST 11 Bridge also allows control of Louvretec Lighting & Heating. Download the app & install the RTS Box (plugs in to your router & wall socket) which communicates with your devices via signal.



BST 11 BRIDGE & CONNEXOON APP BY SOMFY

### TaHoma

Tahoma by Somfy is the central hub that connects and controls the smart home ecosystem. Convenient, intuitive & easy to configure across a wide range of smart home systems.



TAHOMA CENTRAL HUB

### BMS

A Building Management System (BMS) is a pad from which you can manage a home's shading, heating, cooling, ventilation & lighting controls. Louvretec Opening Roofs can be integrated into a home or building's BMS. Retract Roof, Heating & Lighting can be integrated via an RS232 Transmitter.





BUILDING MANAGEMENT SYSTEM (BMS)

### Hard Wired Switch

A Somfy Hard Wired Switch provides control of a motorised Opening Roof via a 230v wall switch wired directly to the motor.



SOMFY SWITCH
FOR AN OPENING ROOF

### Wall Mounted Remote

A Teleco Wall Mounted Remote provides control of a single Retract Roof, LED Lights, or a Dimmable Heater.



TELECO WALL MOUNTED REMOTE
FOR A RETRACT ROOF

# RAIN SENSOR OPTION

## Teleco Wired Rain102H

The Rain102H by Teleco Rain Sensor can be programmed to automatically close the Louvres & includes integrated heating function for preventing false activation in case of ice and snow.



TELECO RAIN SENSOR

©Louvretec 2025 – All Rights Reserved. Technical specifications subject to change without notice.

## WIRING DETAIL : SINGLE SOLAR POWERED MOTOR & REMOTE

SOLAR ROOF

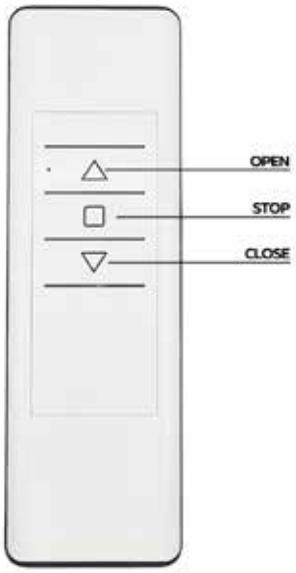


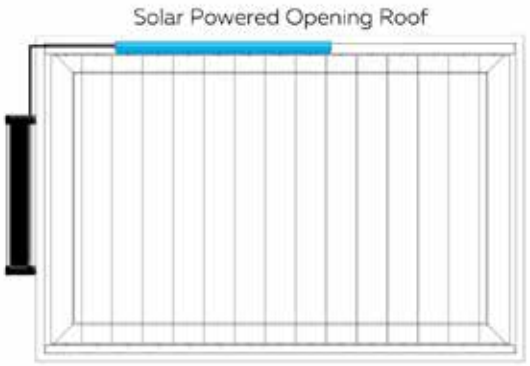




BATTERY INCLUDED IN SOLAR PANEL





©Louvretec 2025 – All Rights Reserved. Technical specifications subject to change without notice.

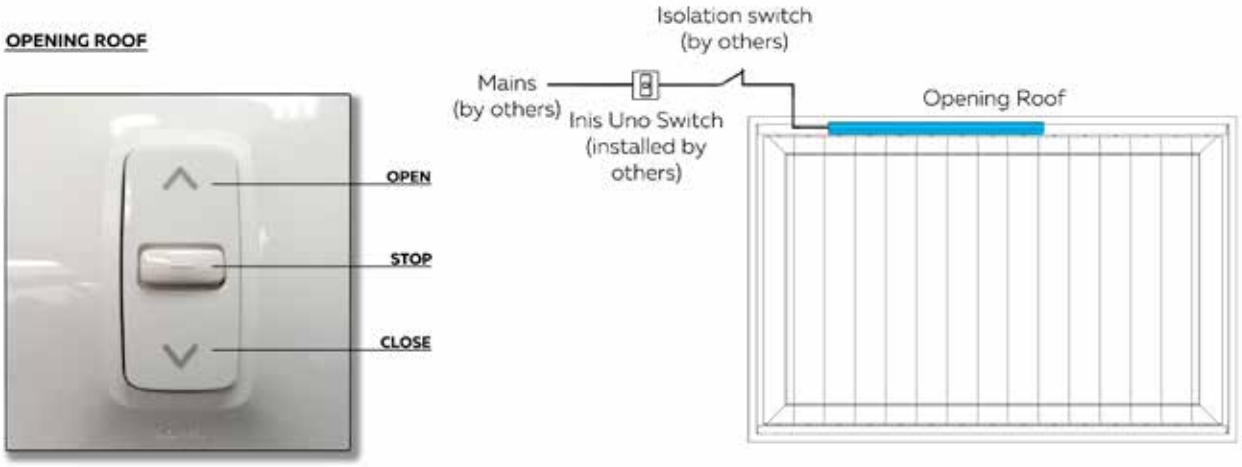


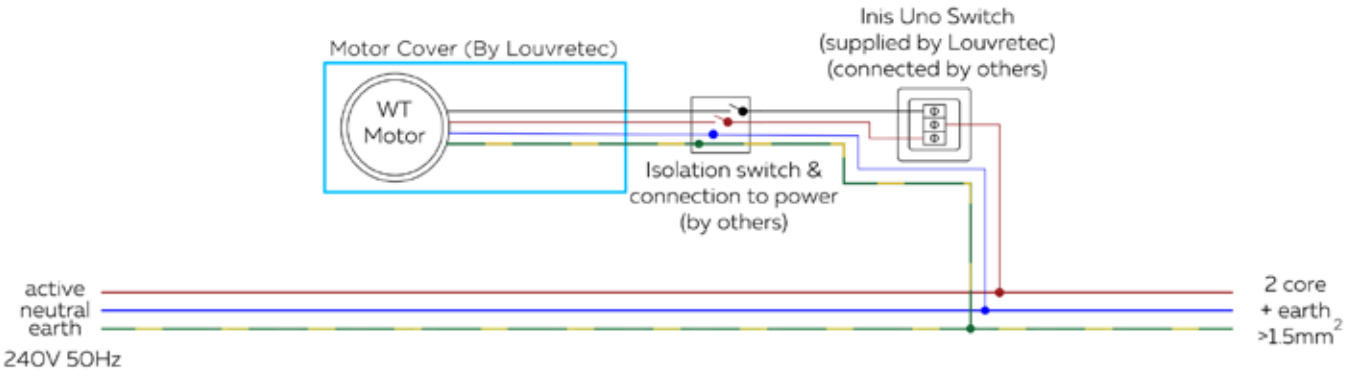


Cable protection (physical & UV) by others



Blue = Neutral
Brown = Direction 1
Black = Direction 2
Yellow/Green = Earth

Do Not Parallel Wire

| | |
|---|---|
| Cable Required | 4 core double insulated heavy duty flex 4 x 1.5mm |
| Voltage | 230–240V/50Hz |
| Rated Current | 0.8 Amps per motor |
| Current Comsumption | 170 Watts per motor |


©Louvretec 2025 – All Rights Reserved. Technical specifications subject to change without notice.

## WIRING DETAIL : SINGLE SOMFY RTS MOTOR & SOMFY REMOTE

**OPENING ROOF**

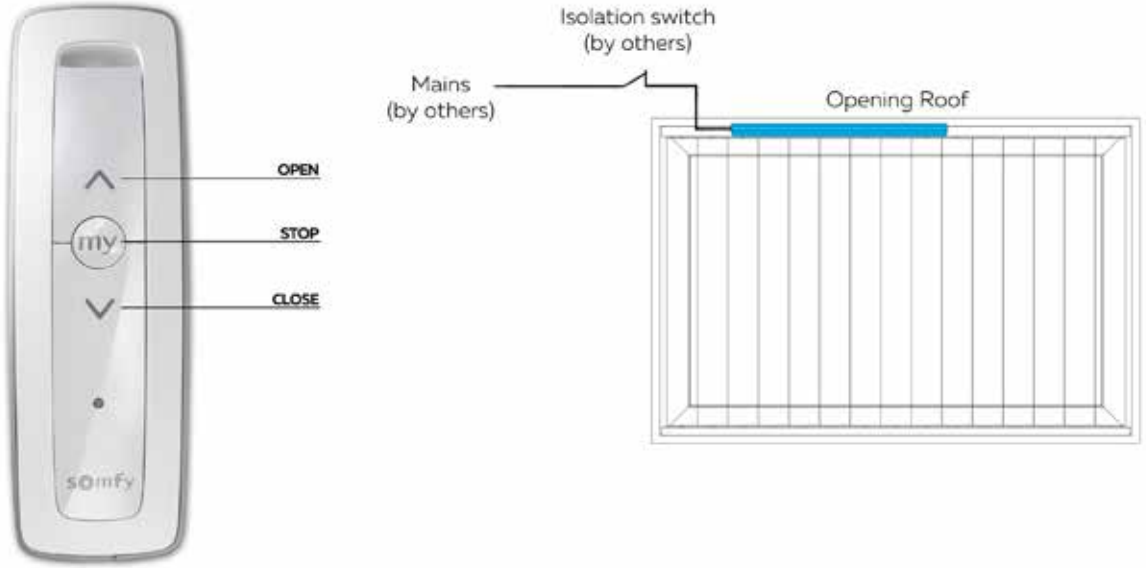


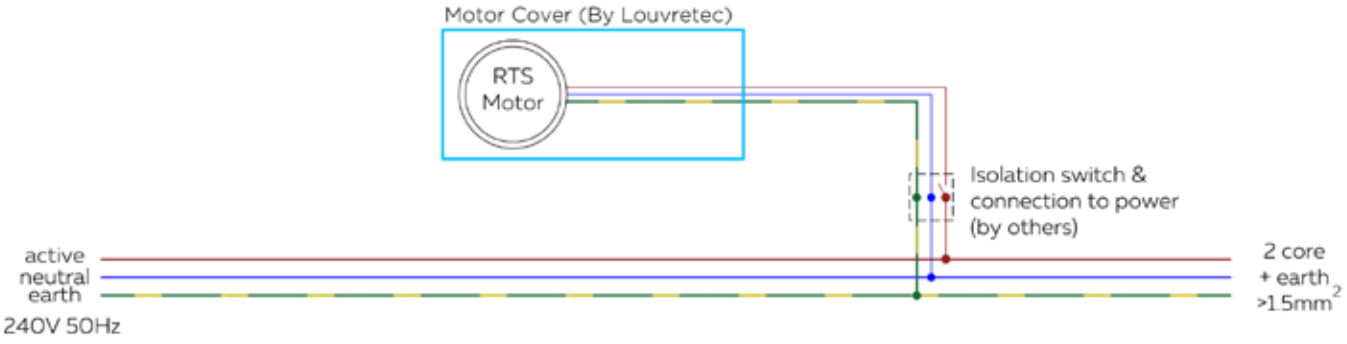





| | |
|---|---|
| Cable Required | 3 core double insulated heavy duty flex 3 x 1.5mm |
| Voltage | 230–240V/50Hz |
| Rated Current | 0.8 Amps |
| Current Comsumption | 170 Watts |



FILE: ELECTRICAL WIRING DIAGRAMS 14.08 DATE MODIFIED: 01/10/2024 SCALE:
www.louvretec.co.nz www.louvretec.com.au

©Louvretec 2025 – All Rights Reserved. Technical specifications subject to change without notice.

**OPENING ROOF**




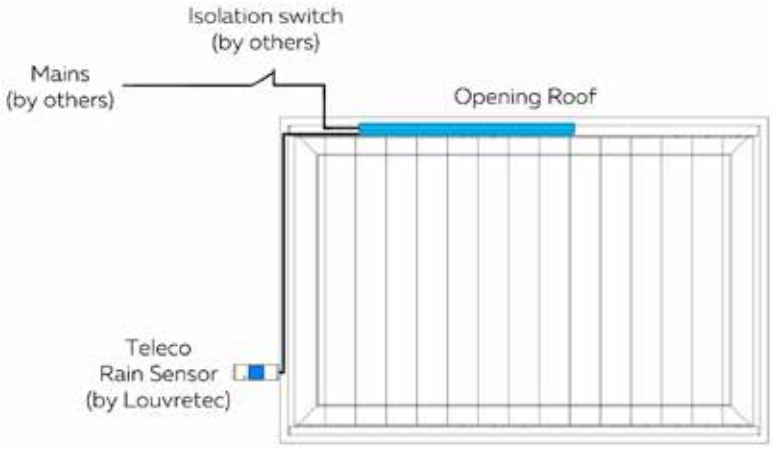


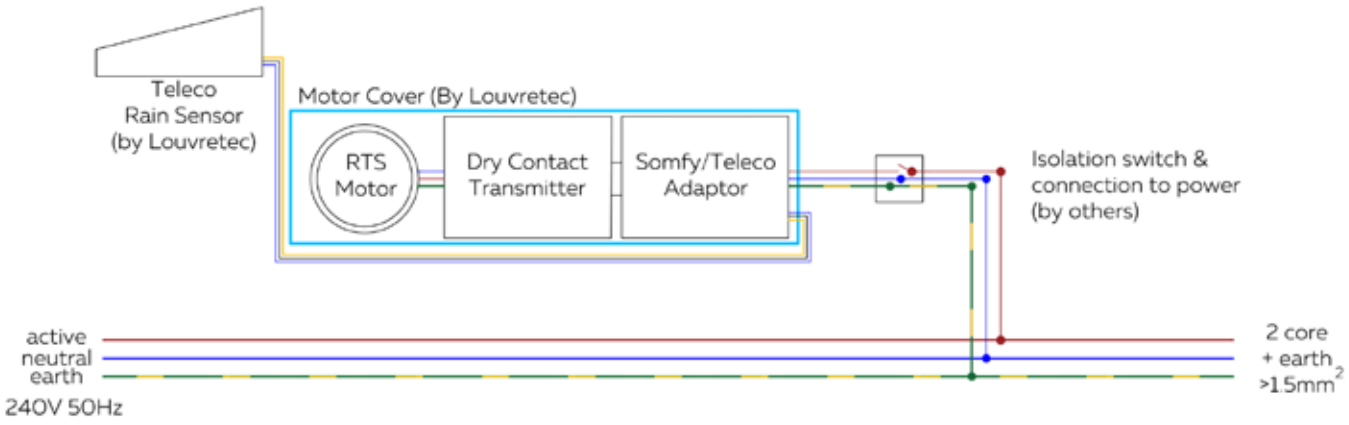


Cable protection (physical & UV) by others



Blue = Neutral
Brown = Live
Yellow/Green = Earth

| | |
|---|---|
| Cable Required | 3 core double insulated heavy duty flex 3 x 1.5mm |
| Voltage | 230–240V/50Hz |
| Rated Current | 0.8 Amps |
| Current Comsumption | 170 Watts |


©Louvretec 2025 – All Rights Reserved. Technical specifications subject to change without notice.

## WIRING DETAIL : MULTIPLE SOMFY RTS MOTORS & SOMFY REMOTE (OPENING ROOFS)

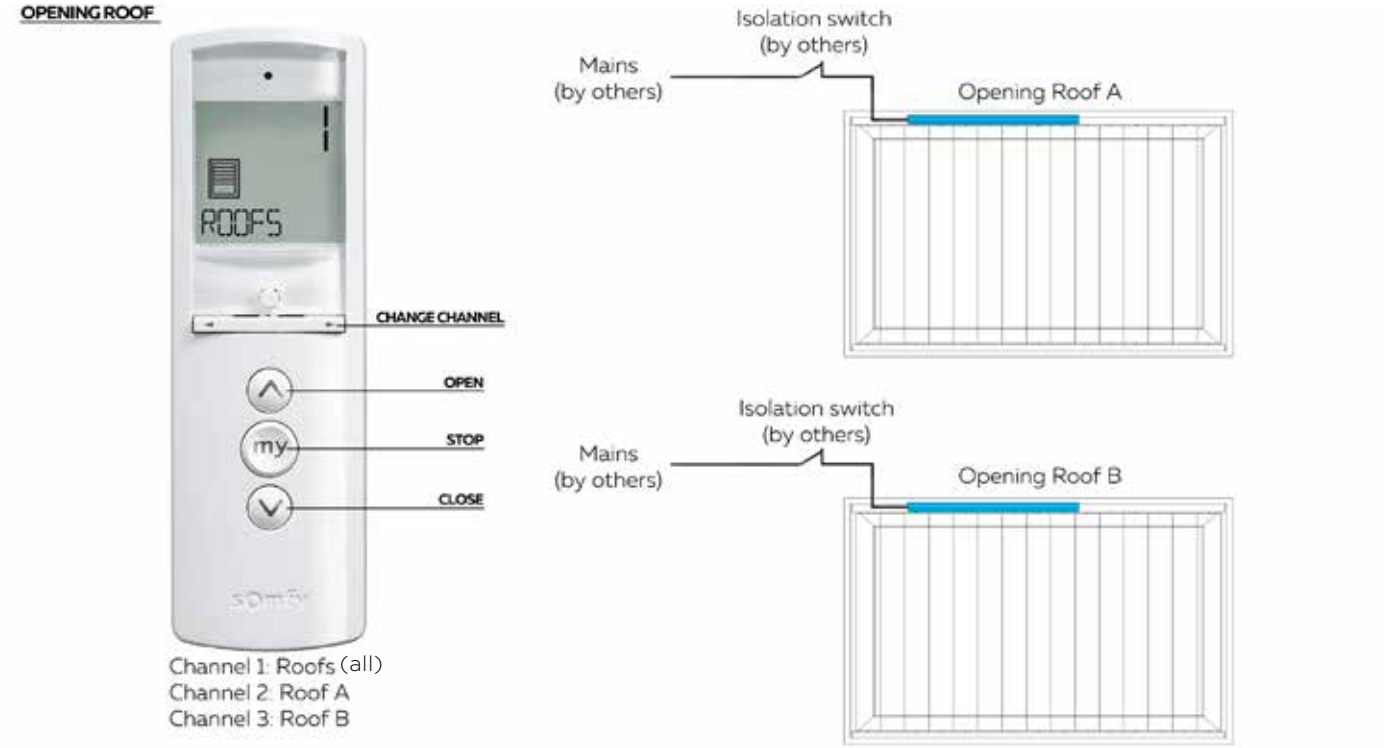


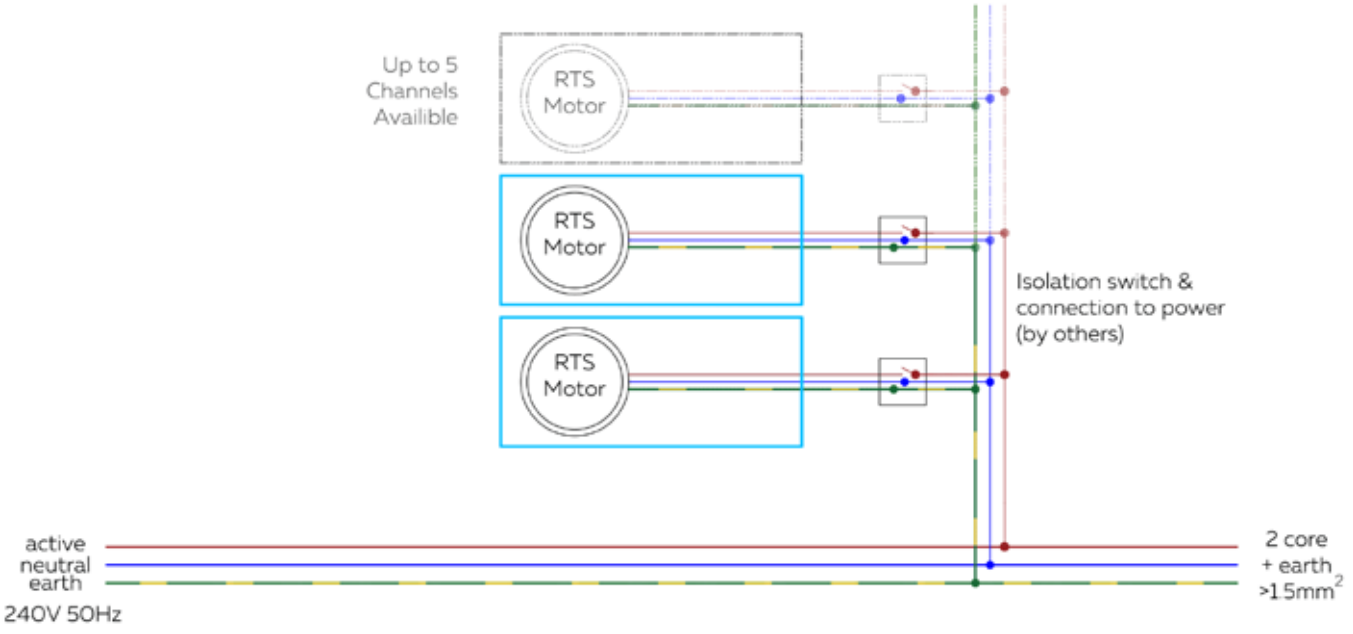





| | |
|---|---|
| Cable Required | 3 core double insulated heavy duty flex 3 x 1.5mm |
| Voltage | 230–240V/50Hz |
| Rated Current | 0.8 Amps per motor |
| Current Comsumption | 170 Watts per motor |


©Louvretec 2025 – All Rights Reserved. Technical specifications subject to change without notice.

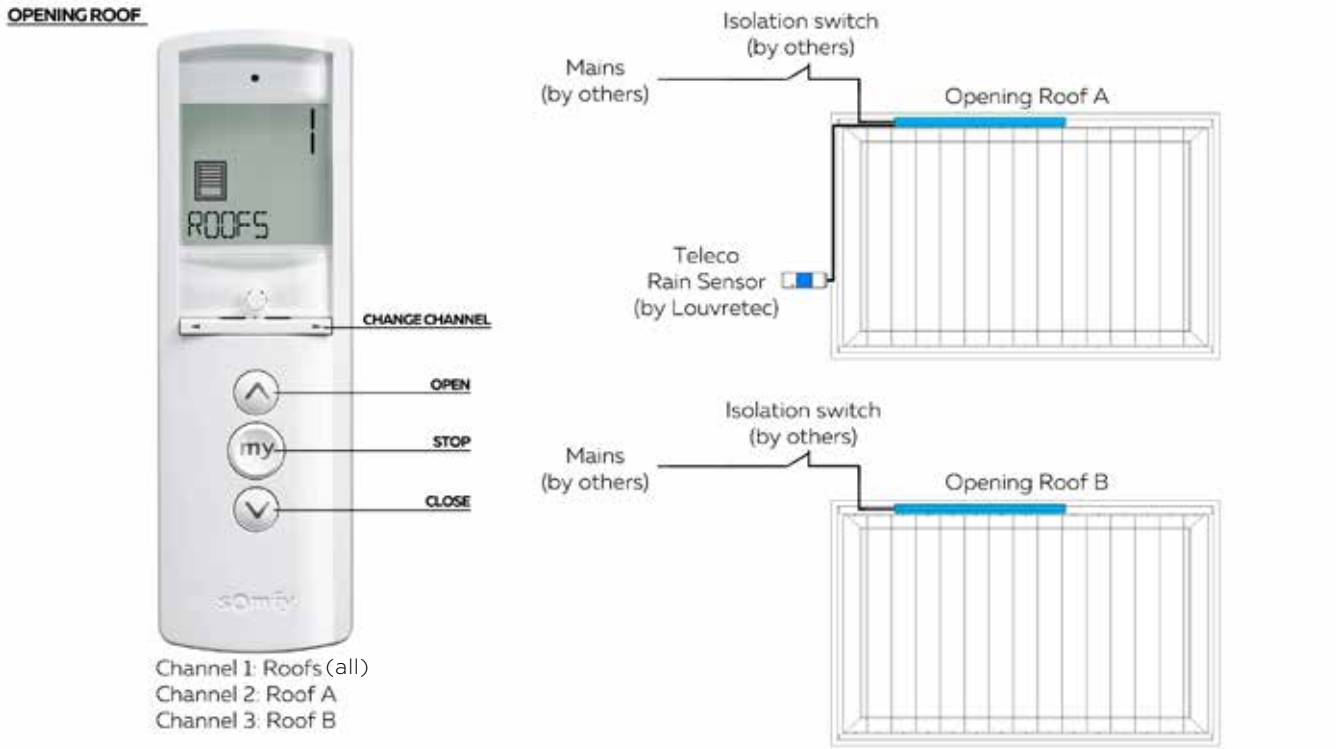


**RAIN SENSOR CONTROLS ALL ROOFS**

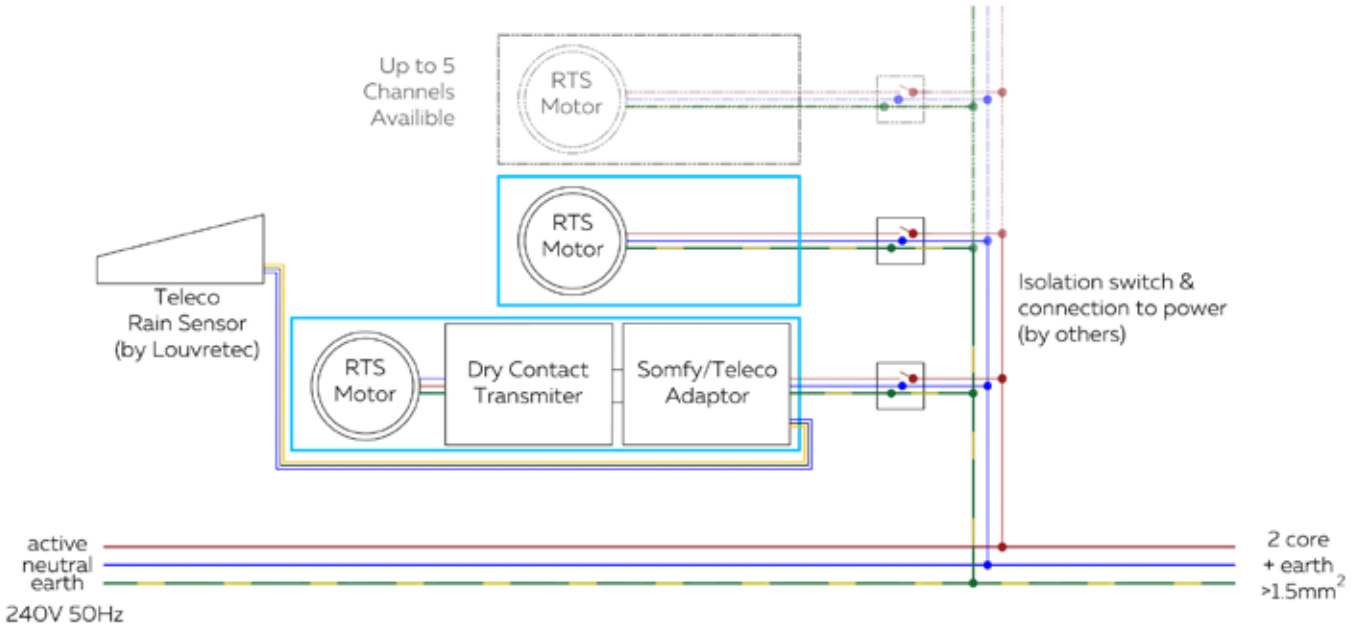


Cable protection (physical & UV) by others



Blue = Neutral
Brown = Live
Yellow/Green = Earth

| | |
|---|---|
| Cable Required | 3 core double insulated heavy duty flex 3 x 1.5mm |
| Voltage | 230–240V/50Hz |
| Rated Current | 0.8 Amps per motor |
| Current Comsumption | 170 Watts per motor |


©Louvretec 2025 – All Rights Reserved. Technical specifications subject to change without notice.

## WIRING DETAIL : MULTIPLE SOMFY RTS MOTORS & SOMFY REMOTE (OPENING ROOF, PANEL & OUTDOOR BLIND)

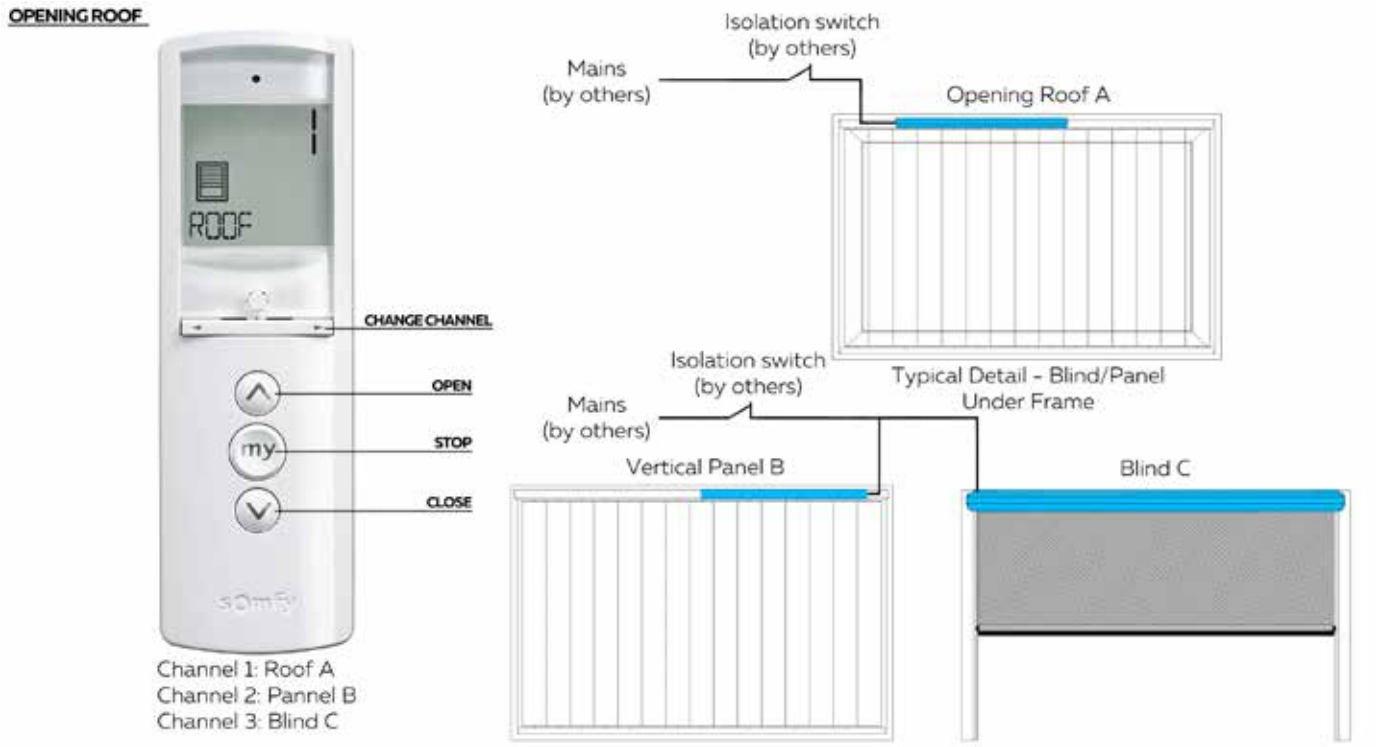


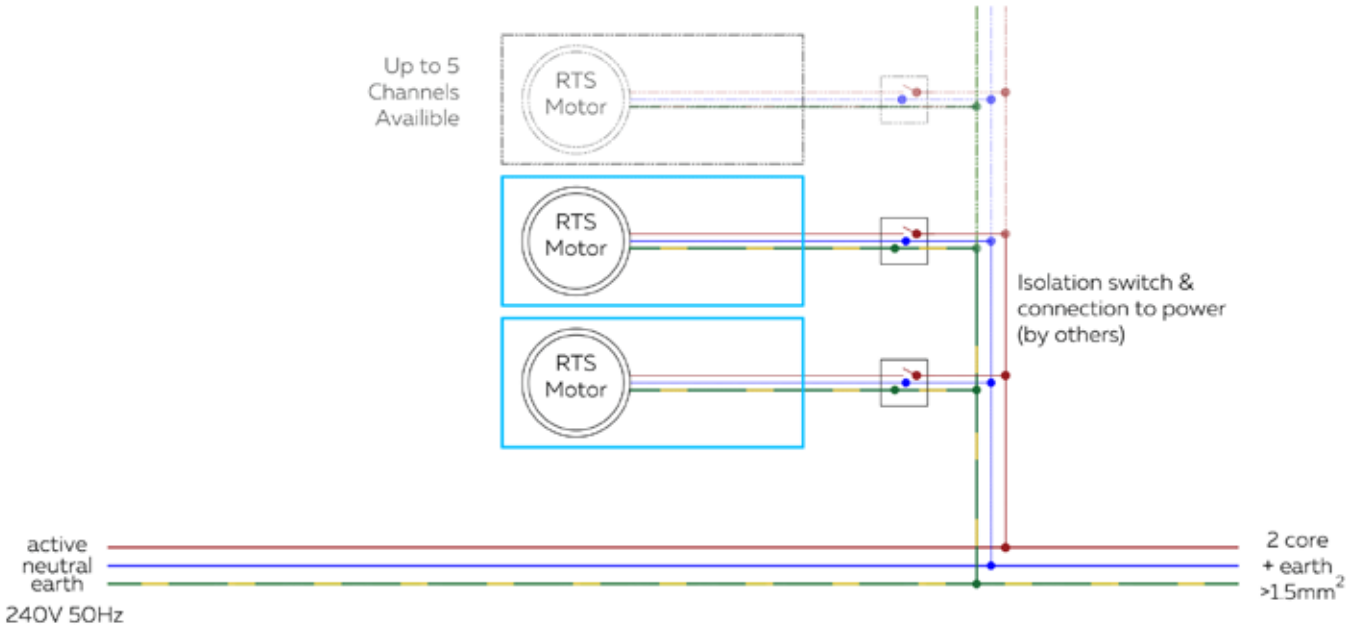


Cable protection (physical & UV) by others



Blue = Neutral
Brown = Live
Yellow/Green = Earth

| | |
|---|---|
| Cable Required | 3 core double insulated heavy duty flex 3 x 1.5mm |
| Voltage | 230–240V/50Hz |
| Rated Current | 0.8 Amps per motor |
| Current Comsumption | 170 Watts per motor |



FILE: ELECTRICAL WIRING DIAGRAMS 14.12 DATE MODIFIED: 01/10/2024 SCALE:

www.louvretec.co.nz www.louvretec.com.au

©Louvretec 2025 – All Rights Reserved. Technical specifications subject to change without notice.

## WIRING DETAIL : MULTIPLE SOMFY RTS MOTORS WITH LOUVRETEC/TELECO RAIN SENSOR ADAPTOR & SOMFY REMOTE (OPENING ROOF, PANEL & OUTDOOR BLIND)

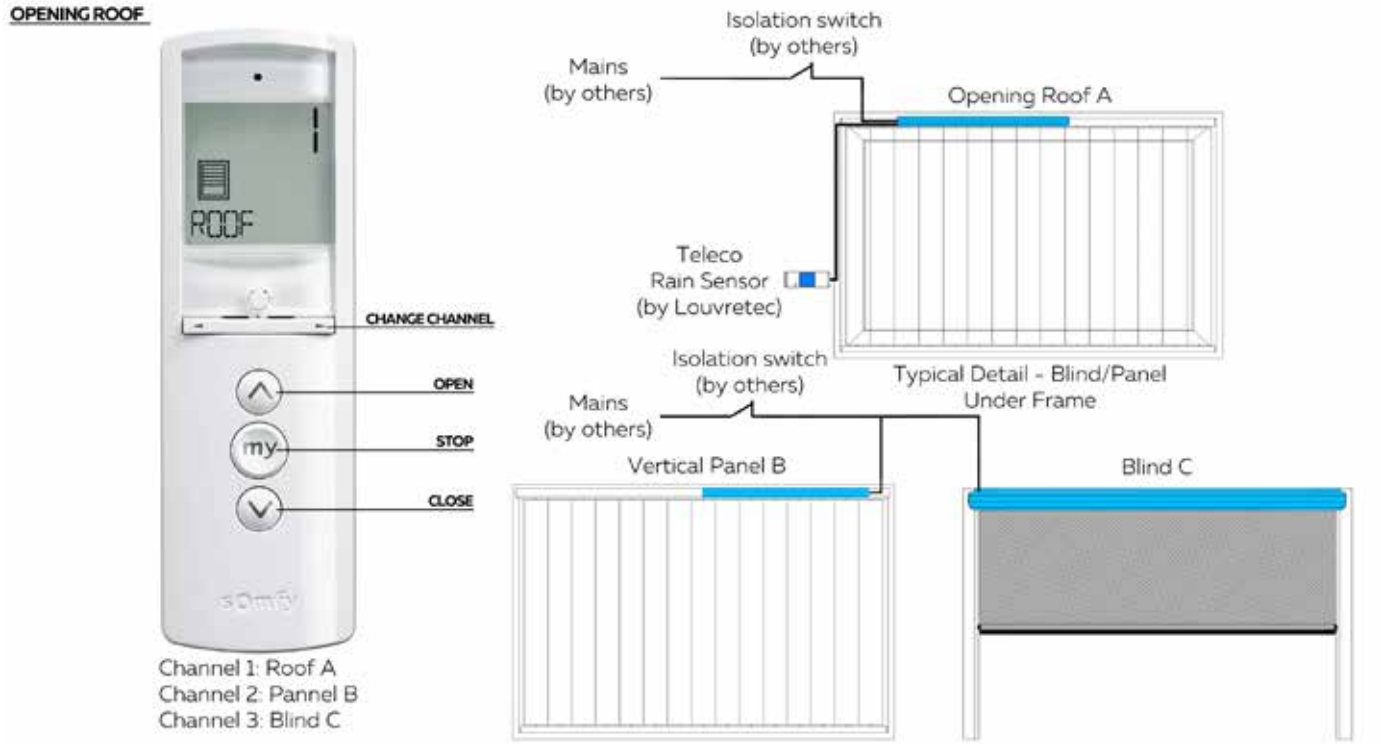


**RAIN SENSOR CONTROLS ALL ROOFS**

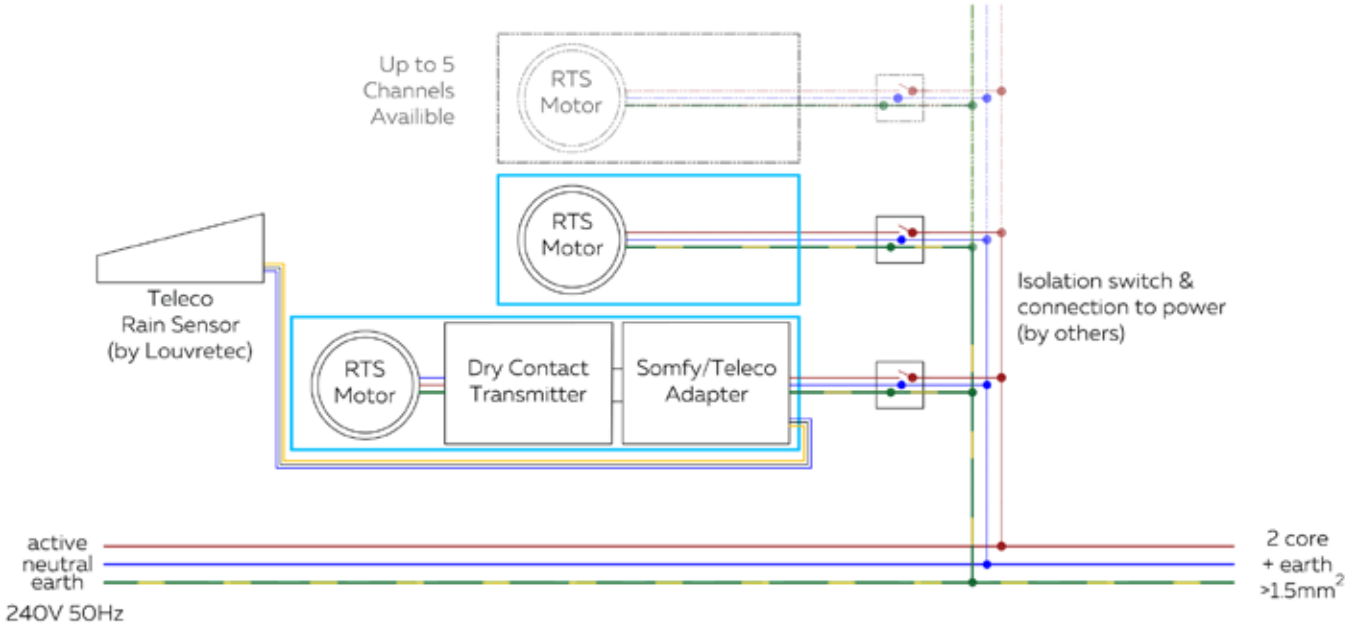


Cable protection (physical & UV) by others



Blue = Neutral
Brown = Live
Yellow/Green = Earth

| | |
|---|---|
| Cable Required | 3 core double insulated heavy duty flex 3 x 1.5mm |
| Voltage | 230–240V/50Hz |
| Rated Current | 0.8 Amps per motor |
| Current Comsumption | 170 Watts per motor |


©Louvretec 2025 – All Rights Reserved. Technical specifications subject to change without notice.

## WIRING DETAIL : MULTIPLE SOMFY RTS MOTORS & SOMFY REMOTE (OPENING ROOF & OUTDOOR BLINDS)

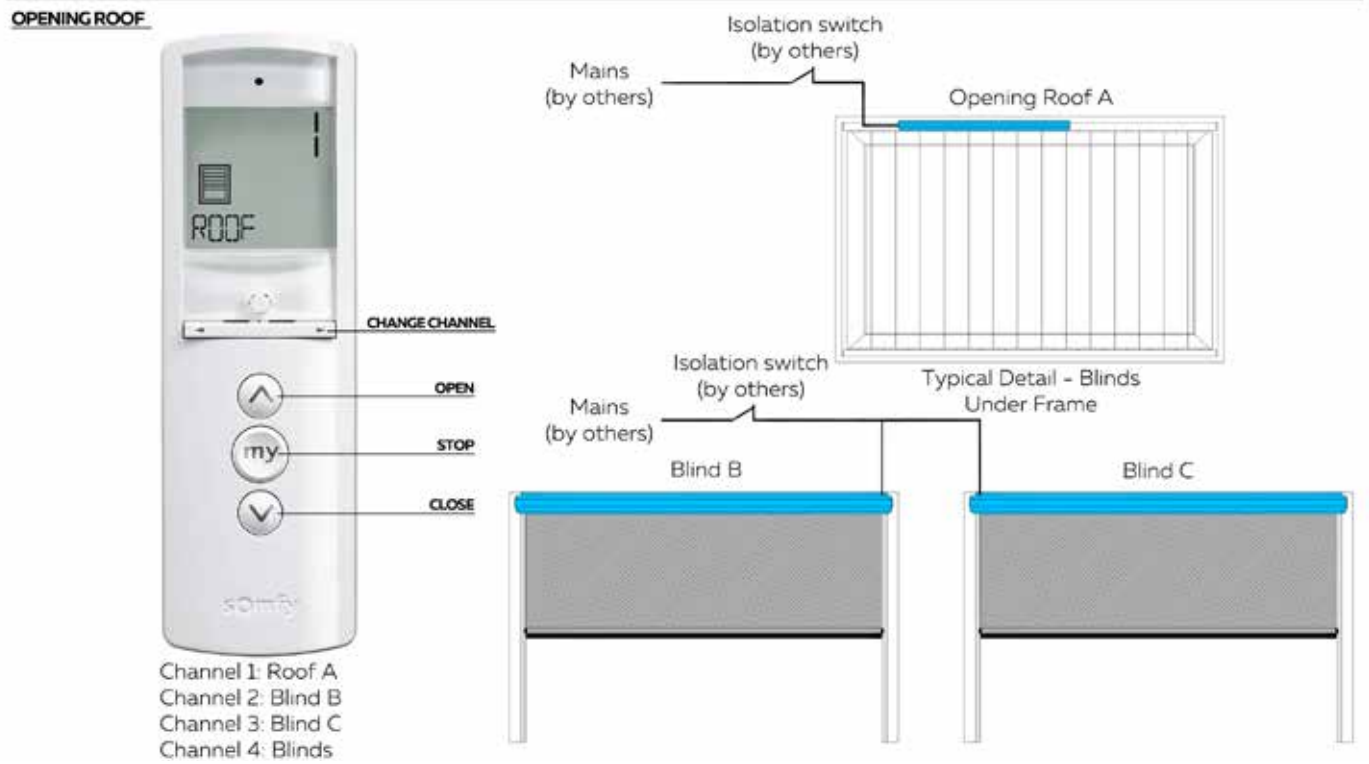


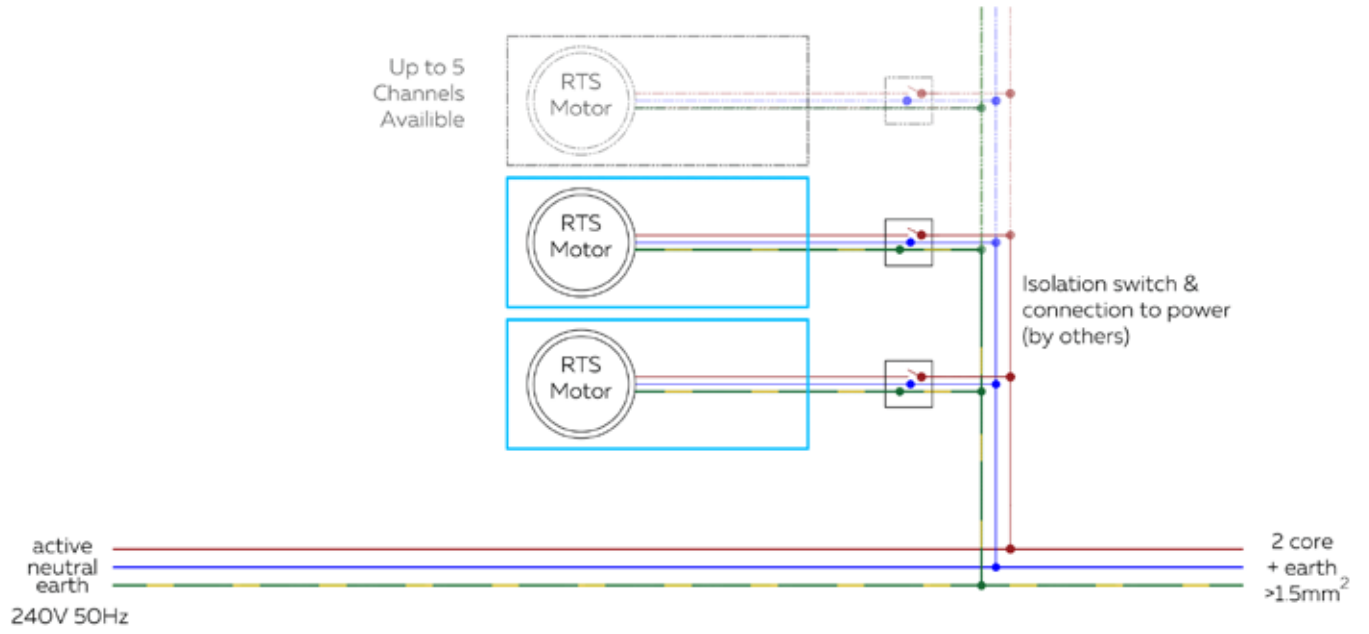


Cable protection (physical & UV) by others



Blue = Neutral
Brown = Live
Yellow/Green = Earth

| | |
|---|---|
| Cable Required | 3 core double insulated heavy duty flex 3 x 1.5mm |
| Voltage | 230–240V/50Hz |
| Rated Current | 0.8 Amps per motor |
| Current Comsumption | 170 Watts per motor |



LouvreTec®



©Louvretec 2025 – All Rights Reserved. Technical specifications subject to change without notice.

## WIRING DETAIL : MULTIPLE SOMFY RTS MOTORS WITH LOUVRETEC/TELECO RAIN SENSOR ADAPTOR & SOMFY REMOTE (OPENING ROOF & OUTDOOR BLINDS)

**OPENING ROOF**

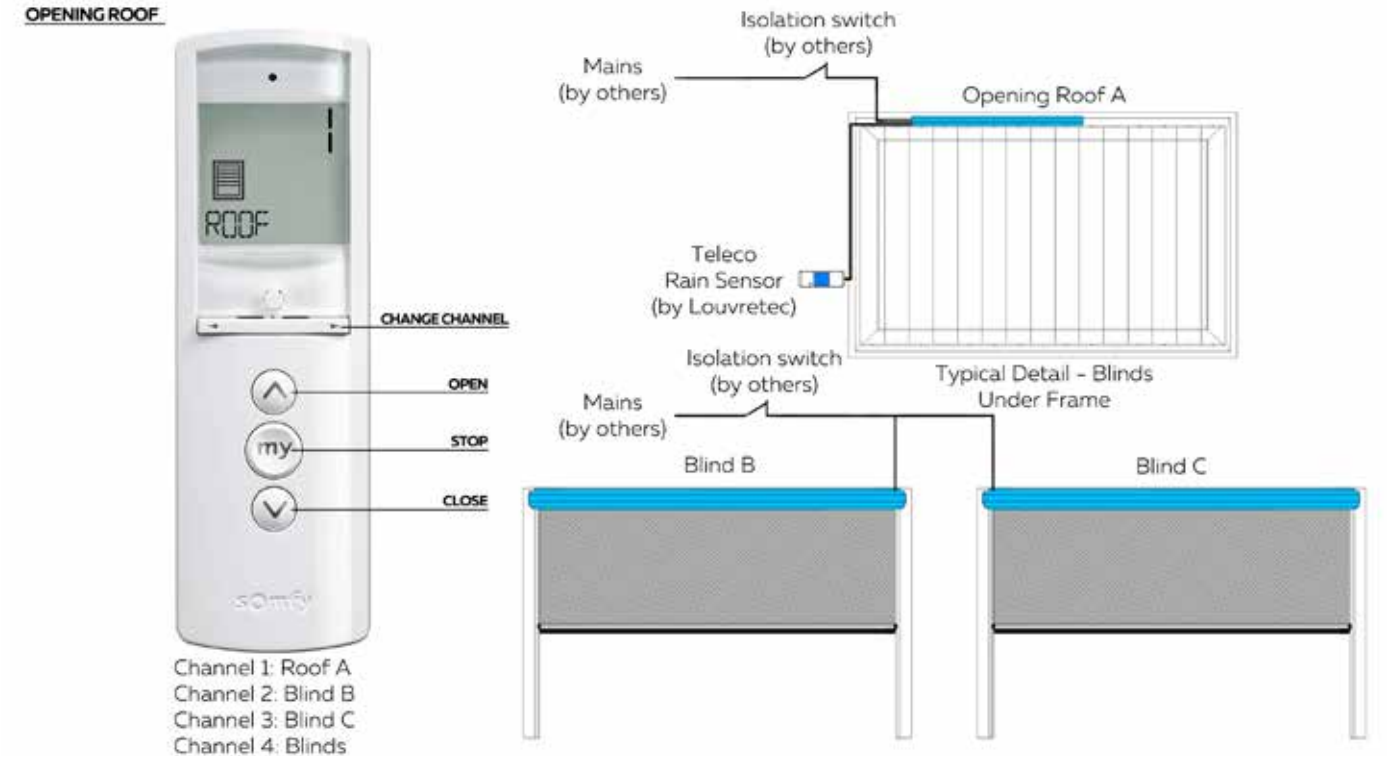


**RAIN SENSOR CONTROLS ALL ROOFS**

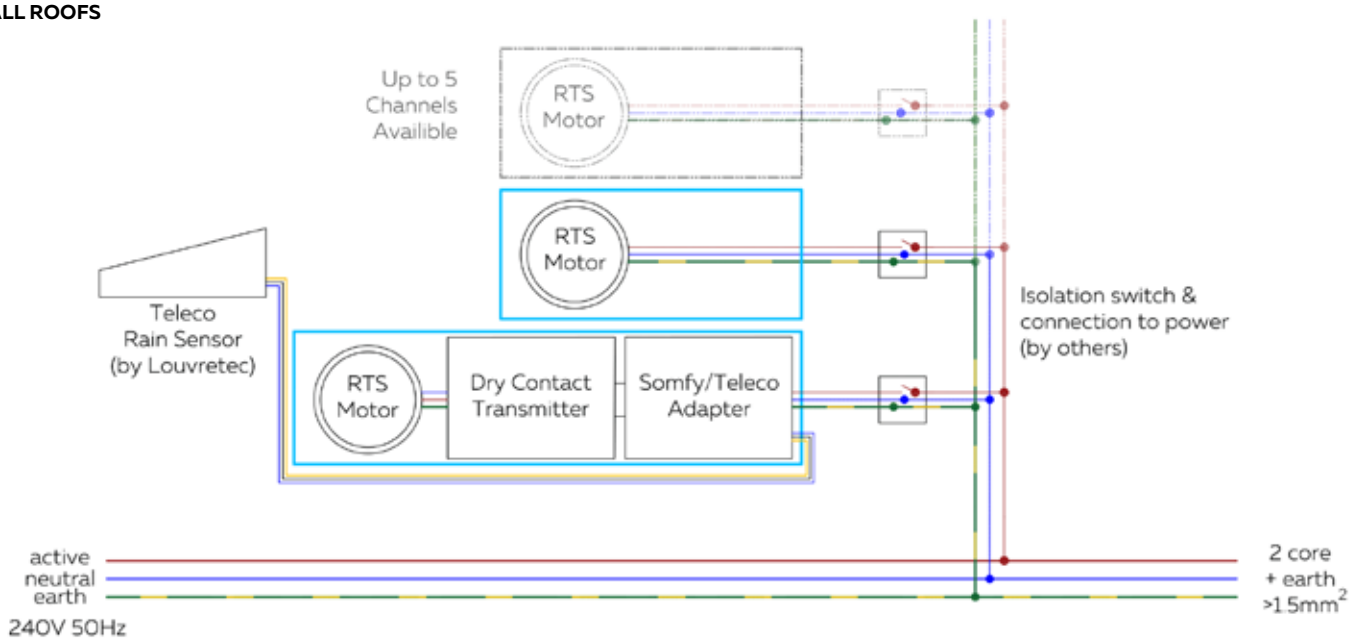


Cable protection (physical & UV) by others



Blue = Neutral
Brown = Live
Yellow/Green = Earth

| | |
|---|---|
| Cable Required | 3 core double insulated heavy duty flex 3 x 1.5mm |
| Voltage | 230–240V/50Hz |
| Rated Current | 0.8 Amps per motor |
| Current Comsumption | 170 Watts per motor |


©Louvretec 2025 – All Rights Reserved. Technical specifications subject to change without notice.

## WIRING DETAIL : SINGLE SOMY RTS MOTOR & TAHOMA BY SOMFY




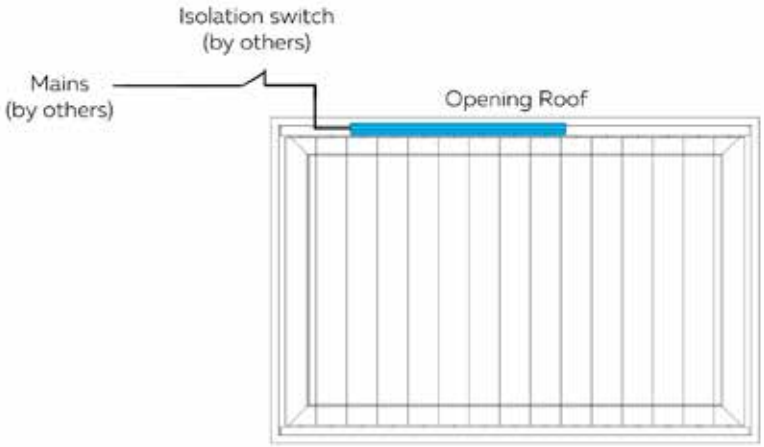


### TAHOMA SWITCH (BY LOUVRETEC)




The Tahoma includes a plug, and requires a wall socket for connection

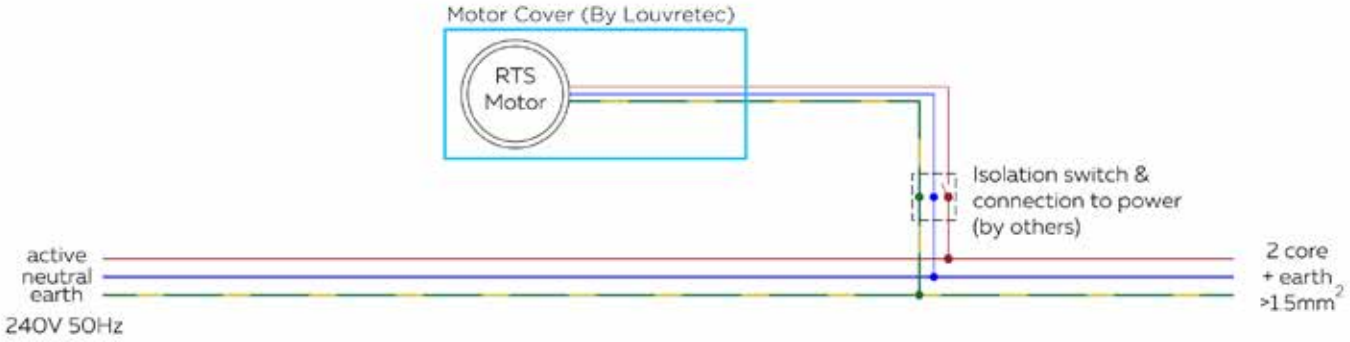


Cable protection (physical & UV) by others



Blue = Neutral
Brown = Live
Yellow/Green = Earth

| | |
|---|---|
| Cable Required | 3 core double insulated heavy duty flex 3 x 1.5mm |
| Voltage | 230–240V/50Hz |
| Rated Current | 0.8 Amps |
| Current Comsumption | 170 Watts |



FILE: ELECTRICAL WIRING DIAGRAMS 14.16 DATE MODIFIED: 01/10/2024 SCALE:
www.louvretec.co.nz www.louvretec.com.au

©Louvretec 2025 – All Rights Reserved. Technical specifications subject to change without notice.

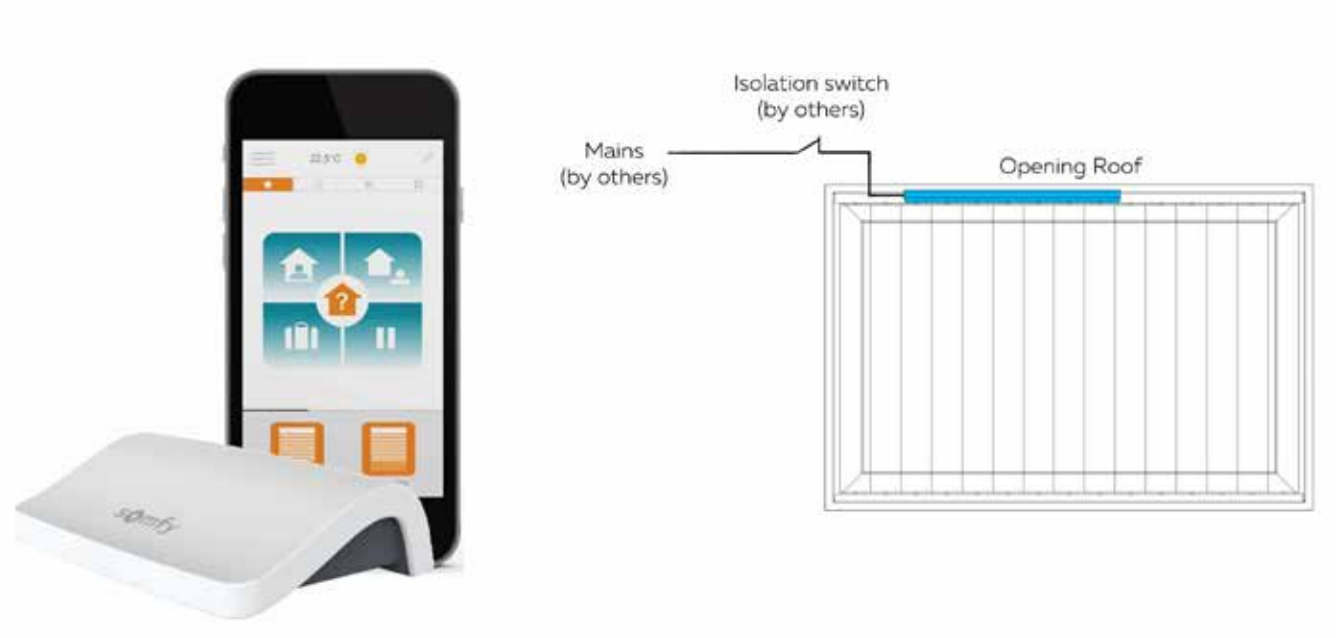


## CONNEXOON WINDOW RTS



The Connexoon includes a plug, and requires a standard wall socket, and an ethernet connection

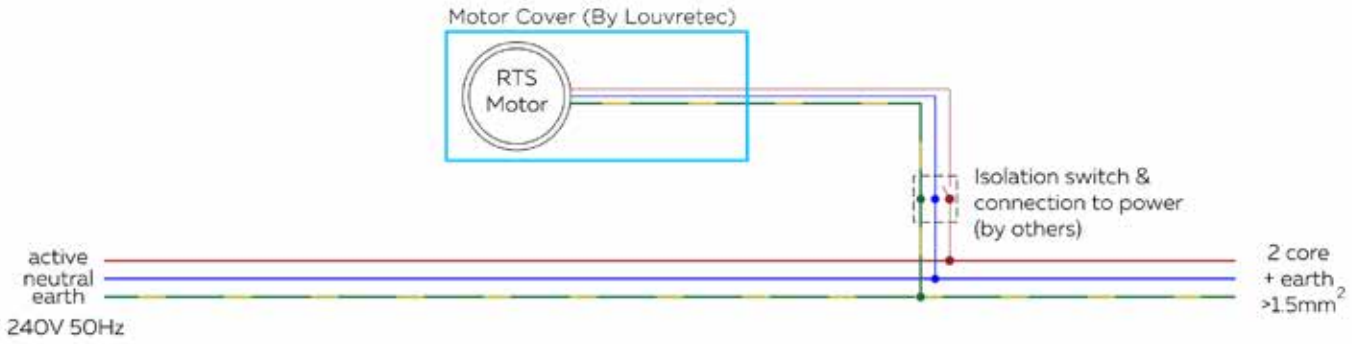


Cable protection (physical & UV) by others




| | |
|---|---|
| Cable Required | 3 core double insulated heavy duty flex 3 x 1.5mm |
| Voltage | 230–240V/50Hz |
| Rated Current | 0.8 Amps |
| Current Comsumption | 170 Watts |


©Louvretec 2025 – All Rights Reserved. Technical specifications subject to change without notice.

## WIRING DETAIL : SINGLE SOMFY WT MOTOR CONTROLLED BY BUILDING MANAGEMENT SYSTEM (BMS)

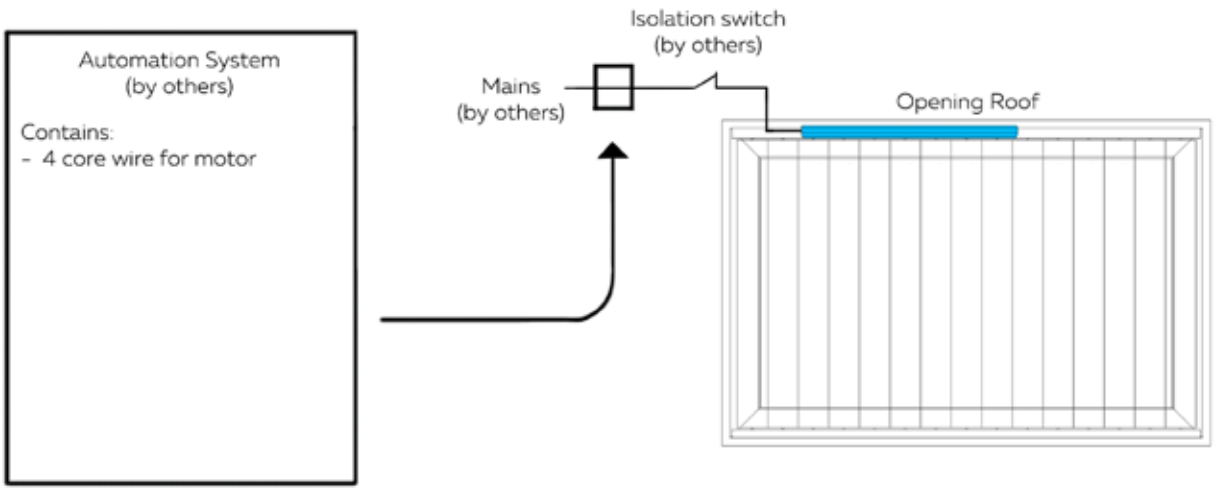


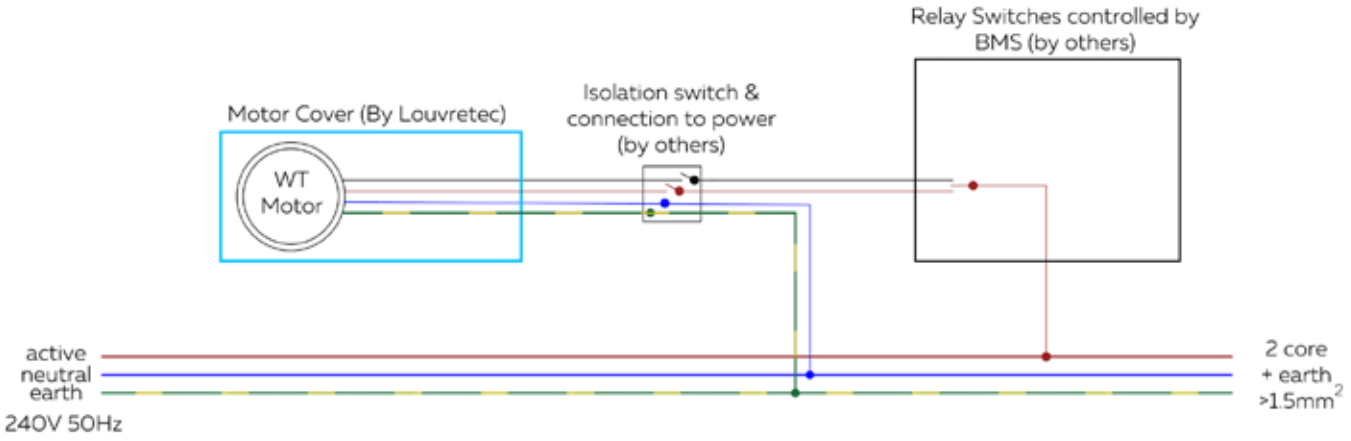


Cable protection (physical & UV) by others



Blue = Neutral
Brown = Direction 1
Black = Direction 2
Yellow/Green = Earth

| | |
|---|---|
| Cable Required | 4 core double insulated heavy duty flex 4 x 1.5mm |
| Voltage | 230–240V/50Hz |
| Rated Current | 0.8 Amps |
| Current Comsumption | 170 Watts |



FILE: ELECTRICAL WIRING DIAGRAMS 14.18 DATE MODIFIED: 01/10/2024 SCALE:
www.louvretec.co.nz www.louvretec.com.au

©Louvretec 2025 – All Rights Reserved. Technical specifications subject to change without notice.

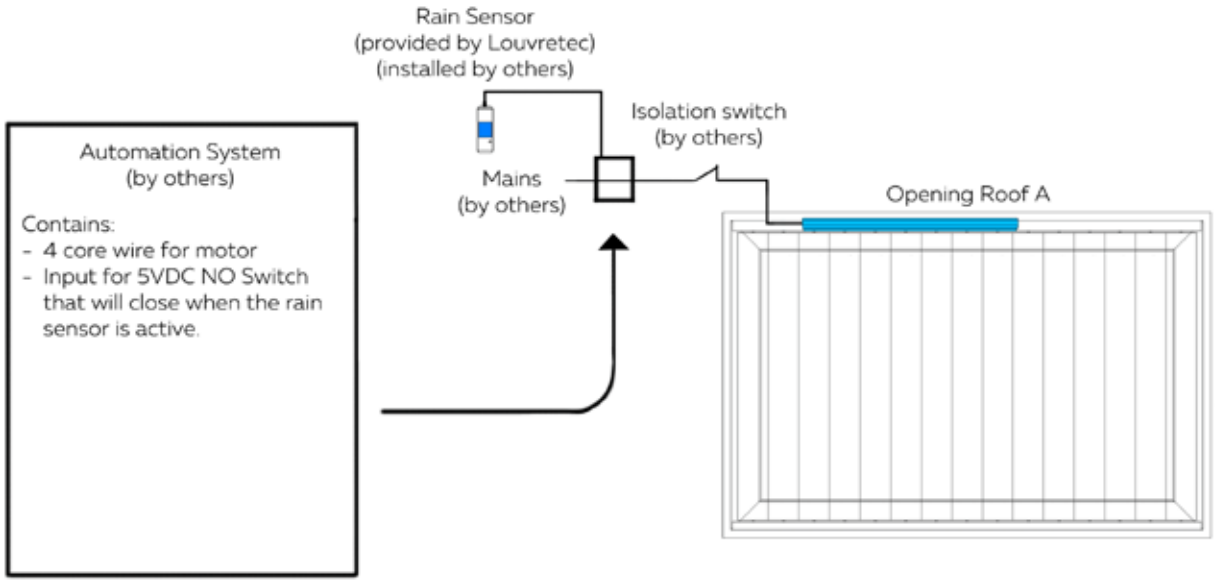


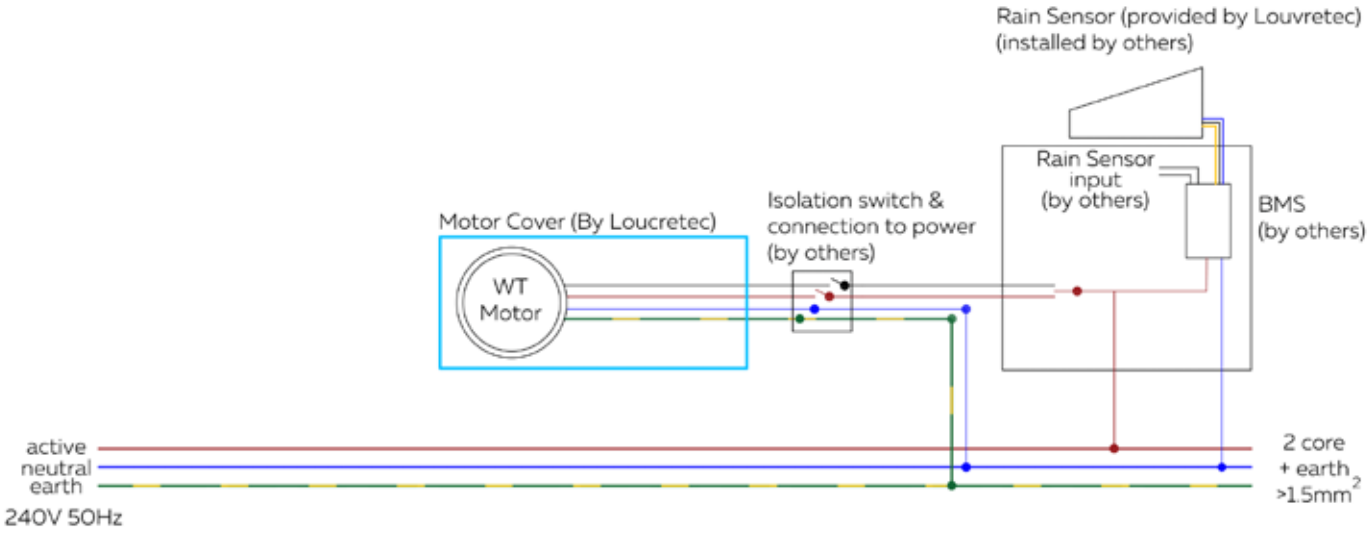


Cable protection (physical & UV) by others



Blue = Neutral
Brown = Direction 1
Black = Direction 2
Yellow/Green = Earth

| | |
|---|---|
| Cable Required | 4 core double insulated heavy duty flex 4 x 1.5mm |
| Voltage | 230–240V/50Hz |
| Rated Current | 0.8 Amps |
| Current Comsumption | 170 Watts |


©Louvretec 2025 – All Rights Reserved. Technical specifications subject to change without notice.

## WIRING DETAIL : MULTIPLE SOMFY WT MOTORS CONTROLLED BY BUILDING MANAGEMENT SYSTEM (BMS)

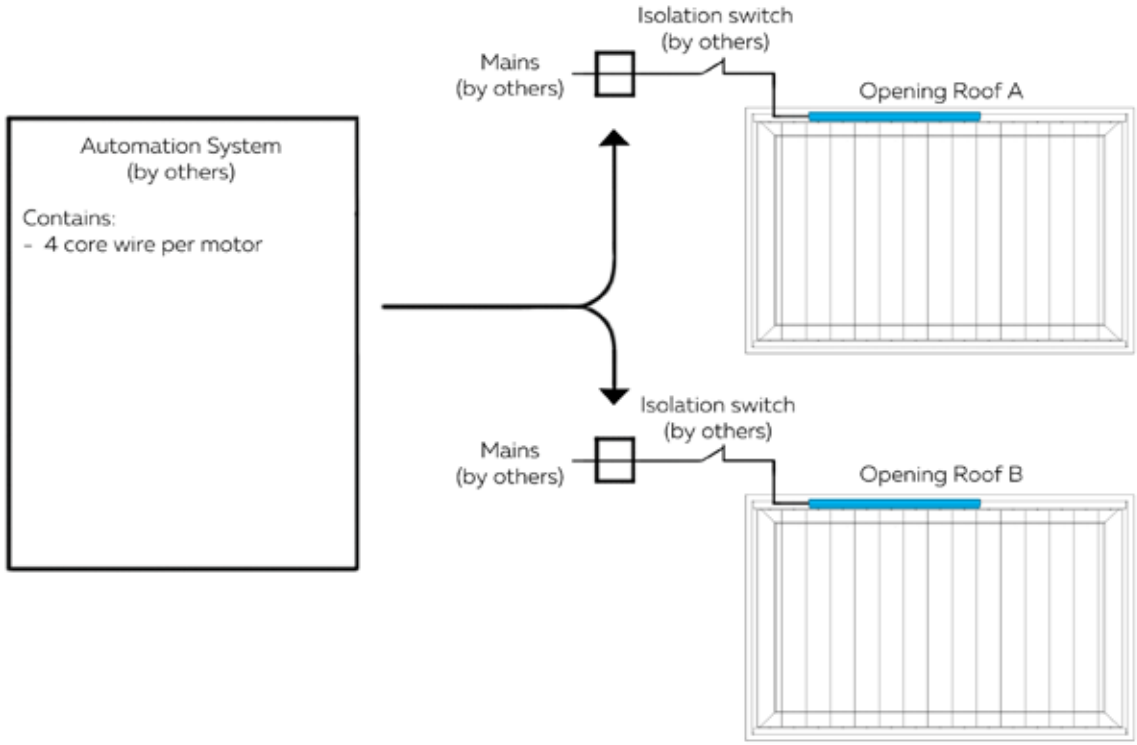


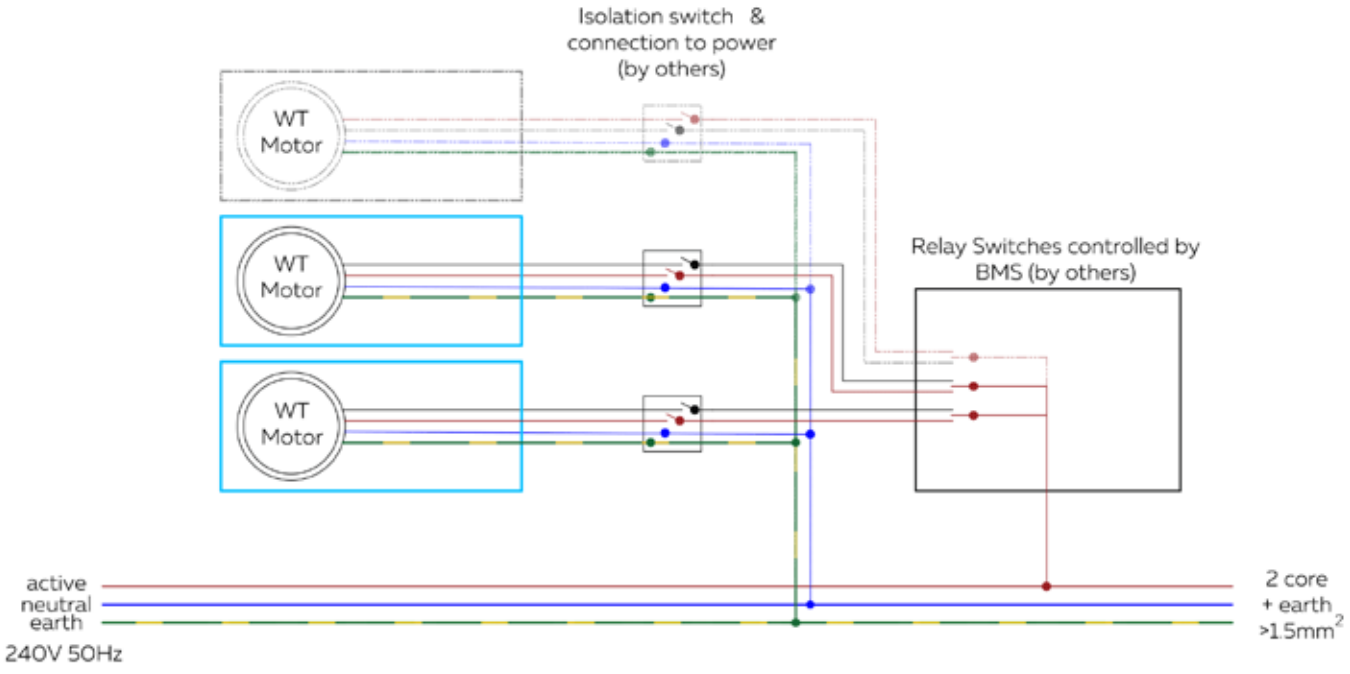


Cable protection (physical & UV) by others



Do Not Parallel Wire

Blue = Neutral
Brown = Direction 1
Black = Direction 2
Yellow/Green = Earth

| | |
|---|---|
| Cable Required | 4 core double insulated heavy duty flex 4 x 1.5mm |
| Voltage | 230–240V/50Hz |
| Rated Current | 0.8 Amps per motor |
| Current Comsumption | 170 Watts per motor |





©Louvretec 2025 – All Rights Reserved. Technical specifications subject to change without notice.

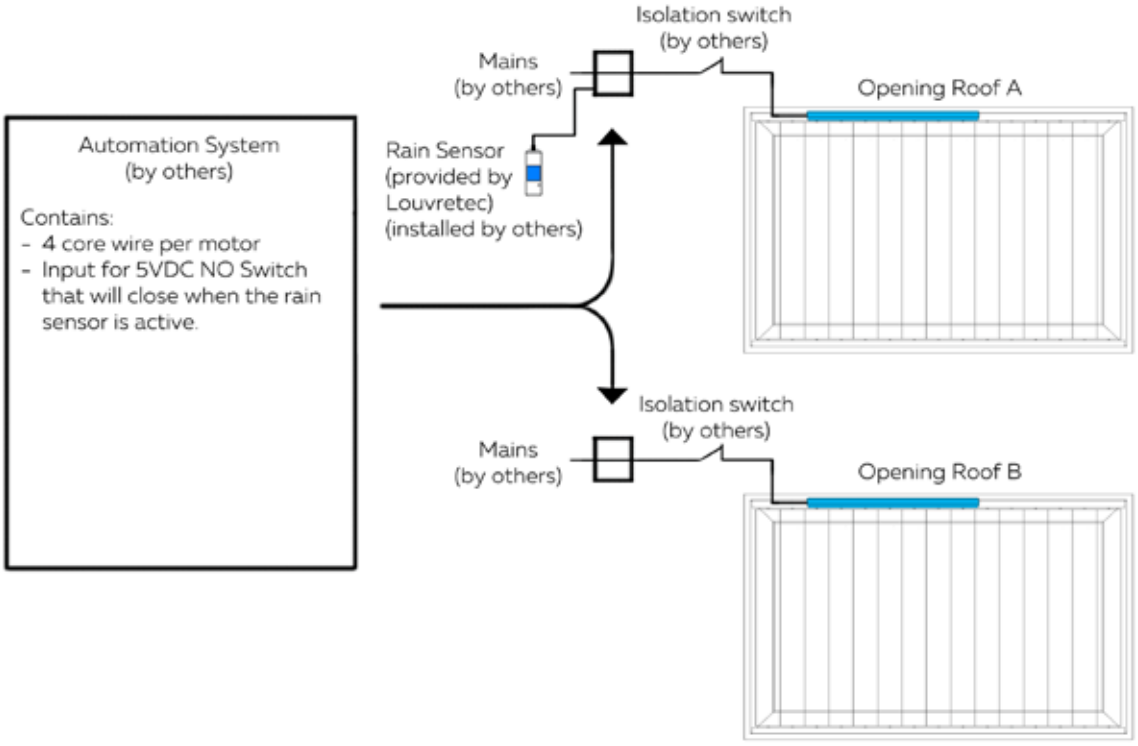


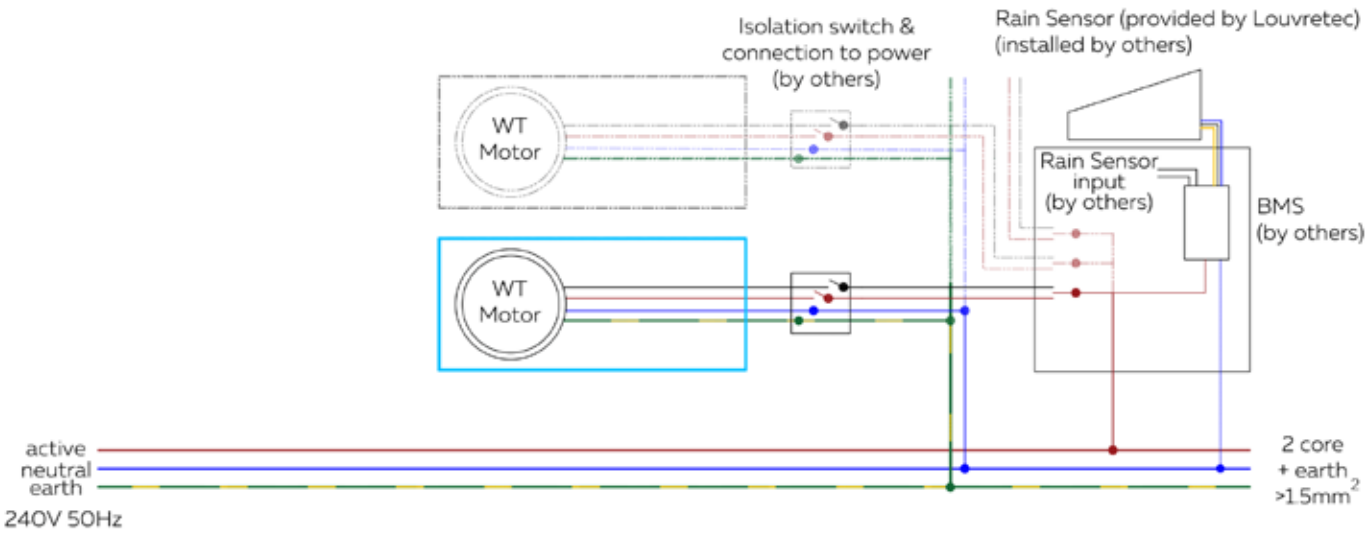





| | |
|---|---|
| Cable Required | 4 core double insulated heavy duty flex<br>4 x 1.5mm |
| Voltage | 230–240V/50Hz |
| Rated Current | 0.8 Amps per motor |
| Current Comsumption | 170 Watts per motor |


©Louvretec 2025 – All Rights Reserved. Technical specifications subject to change without notice.

## WIRING DETAIL : SINGLE SOMFY RTS MOTOR WITH DRY CONTACT TRANSMITTER CONTROLLED BY BUILDING MANAGEMENT SYSTEM (BMS) & OPTIONAL SOMFY REMOTE

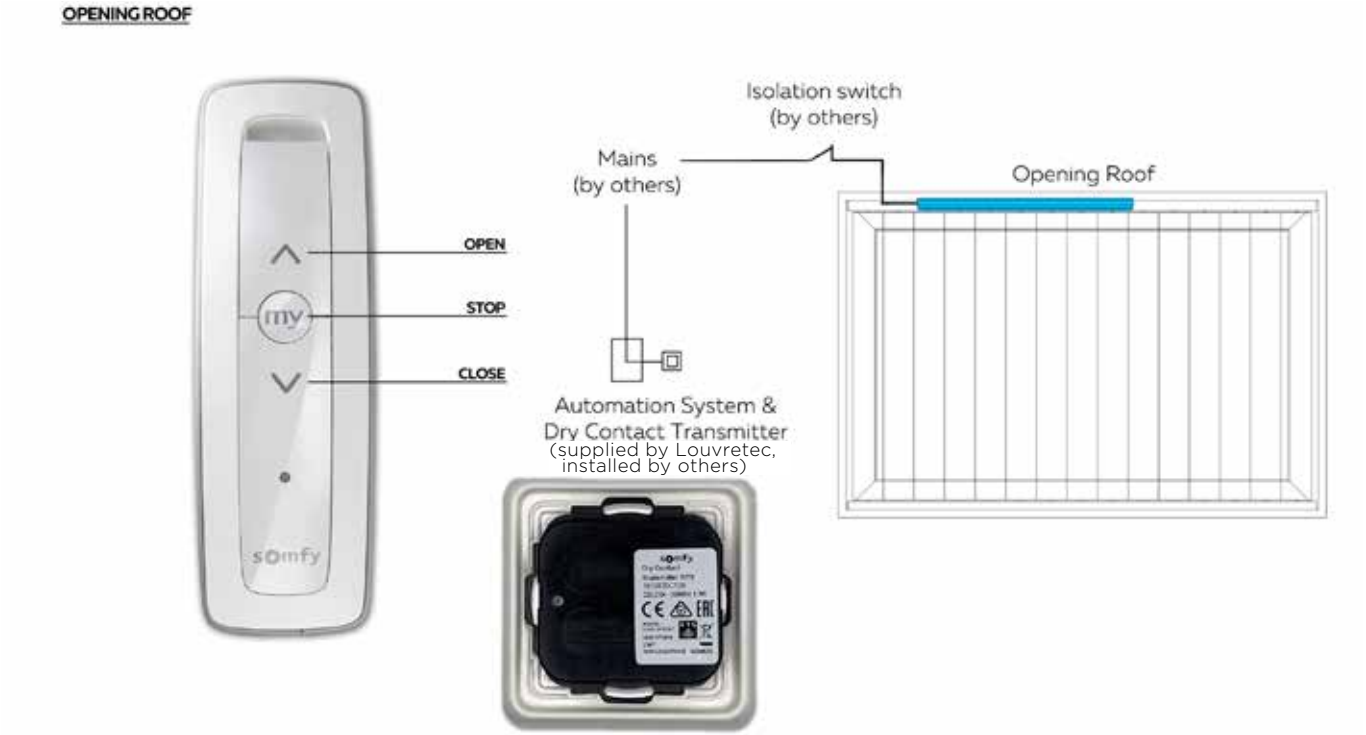


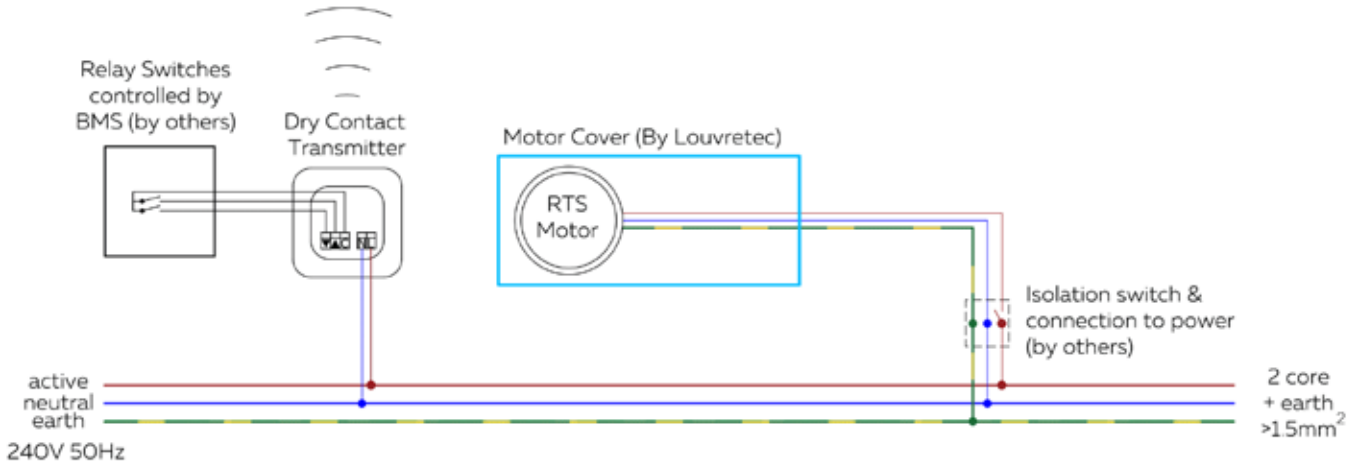


Cable protection (physical & UV) by others



Blue = Neutral
Brown = Live
Yellow/Green = Earth

| | |
|---|---|
| Cable Required | 3 core double insulated heavy duty flex 3 x 1.5mm |
| Voltage | 230–240V/50Hz |
| Rated Current | 0.8 Amps |
| Current Comsumption | 170 Watts |



FILE: ELECTRICAL WIRING DIAGRAMS 14.22 DATE MODIFIED: 01/10/2024 SCALE:
www.louvretec.co.nz www.louvretec.com.au

©Louvretec 2025 – All Rights Reserved. Technical specifications subject to change without notice.

**WHITE LIGHTING**

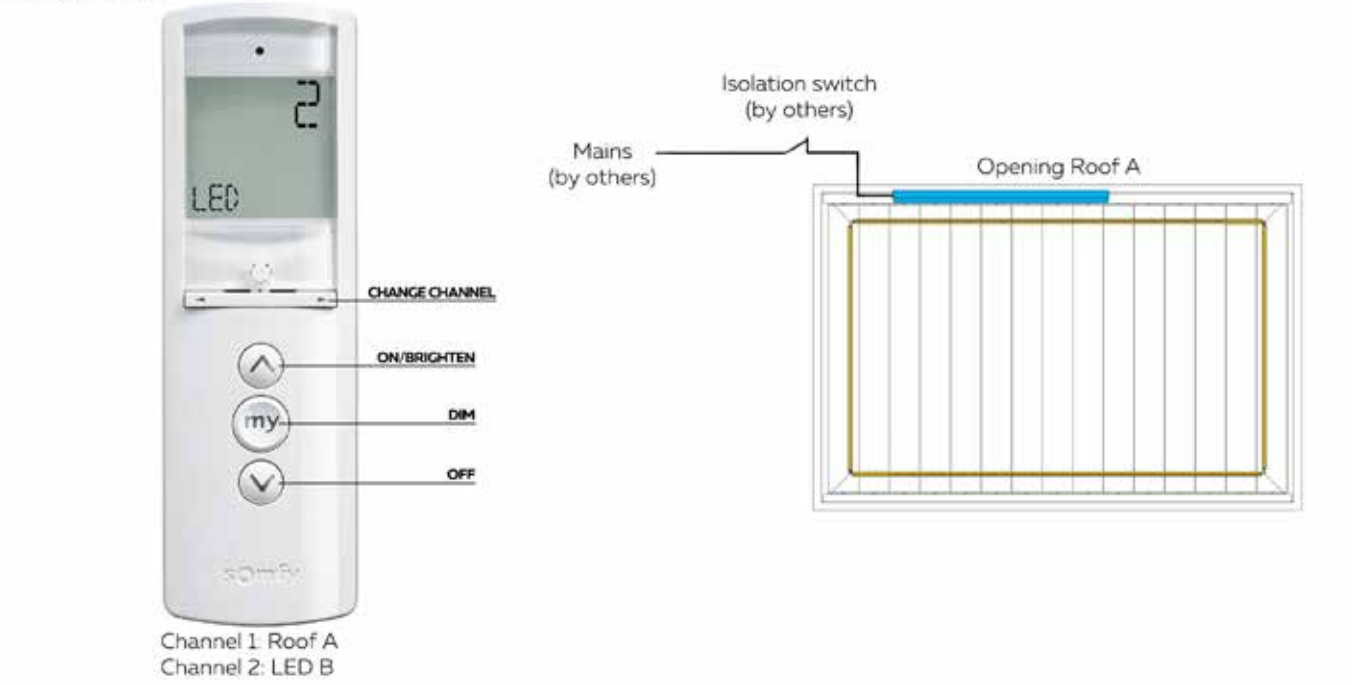


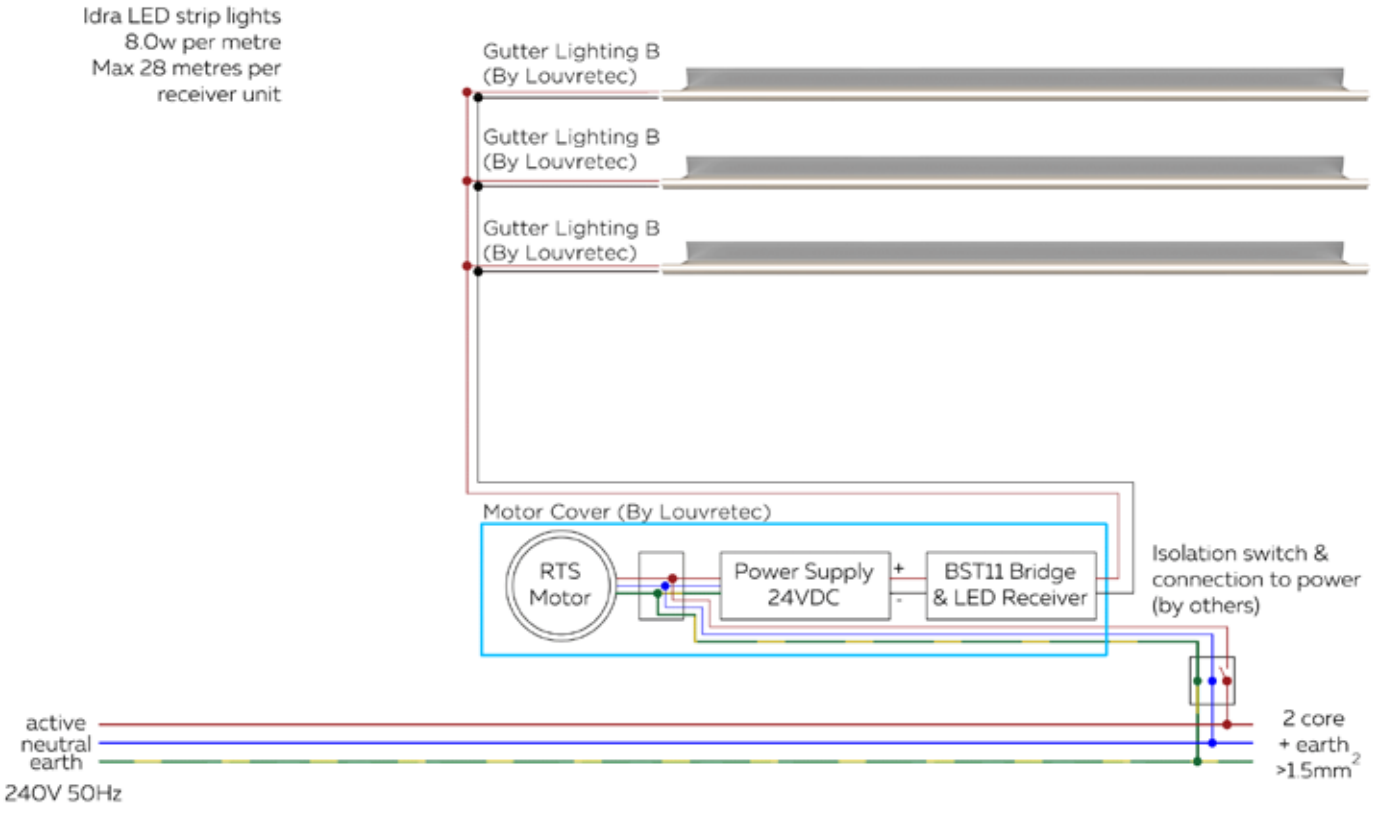


Cable protection (physical & UV) by others



Blue = Neutral
Brown = Live
Yellow/Green = Earth

| | |
|---|---|
| Cable Required | 3 core double insulated heavy duty flex 3 x 1.5mm |
| Voltage | 230–240V/50Hz |
| Rated Current | 3.2 Amps |
| Current Comsumption | 770 Watts |


©Louvretec 2025 – All Rights Reserved. Technical specifications subject to change without notice.

## WIRING DETAIL : SINGLE SOMFY RTS MOTOR WITH LOUVRETEC GUTTER STRIP LIGHTING, LOUVRETEC/TELECO RAIN SENSOR ADATPOR, BST11 BRIDGE & SOMFY REMOTE

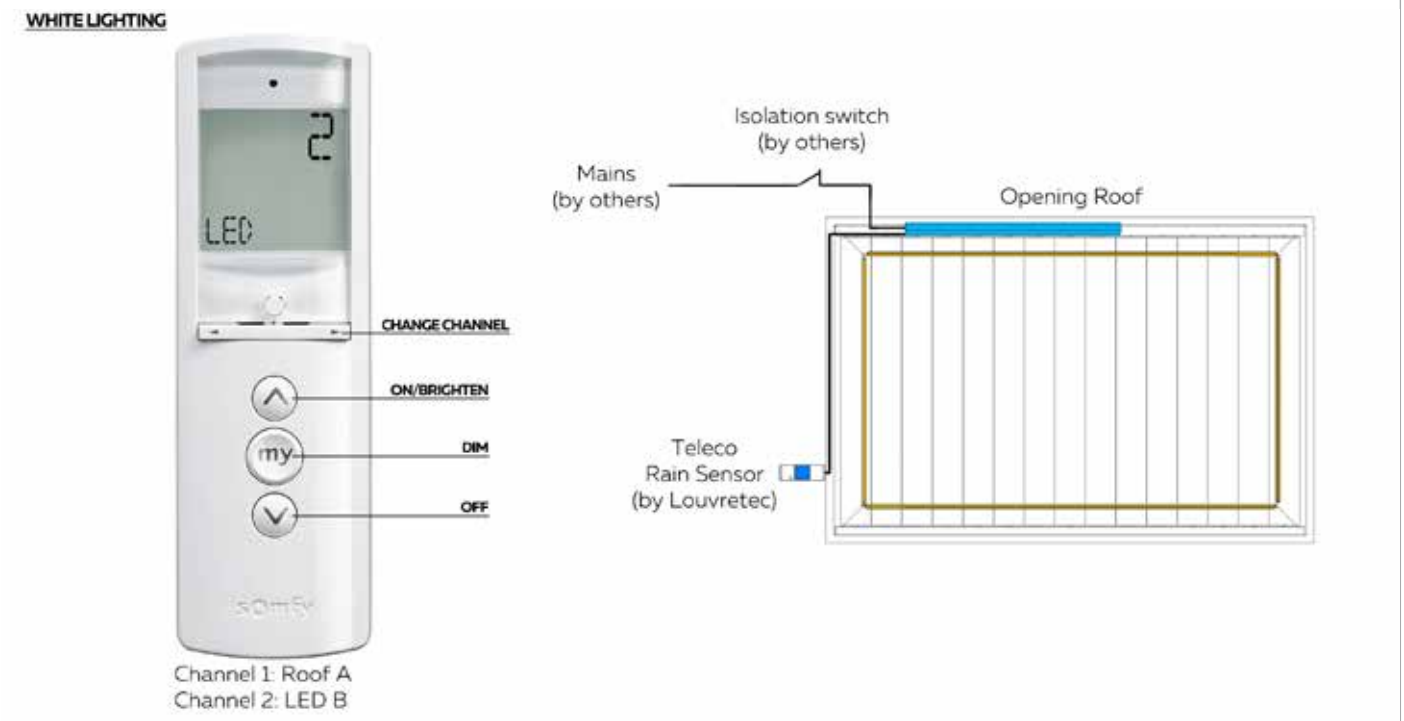


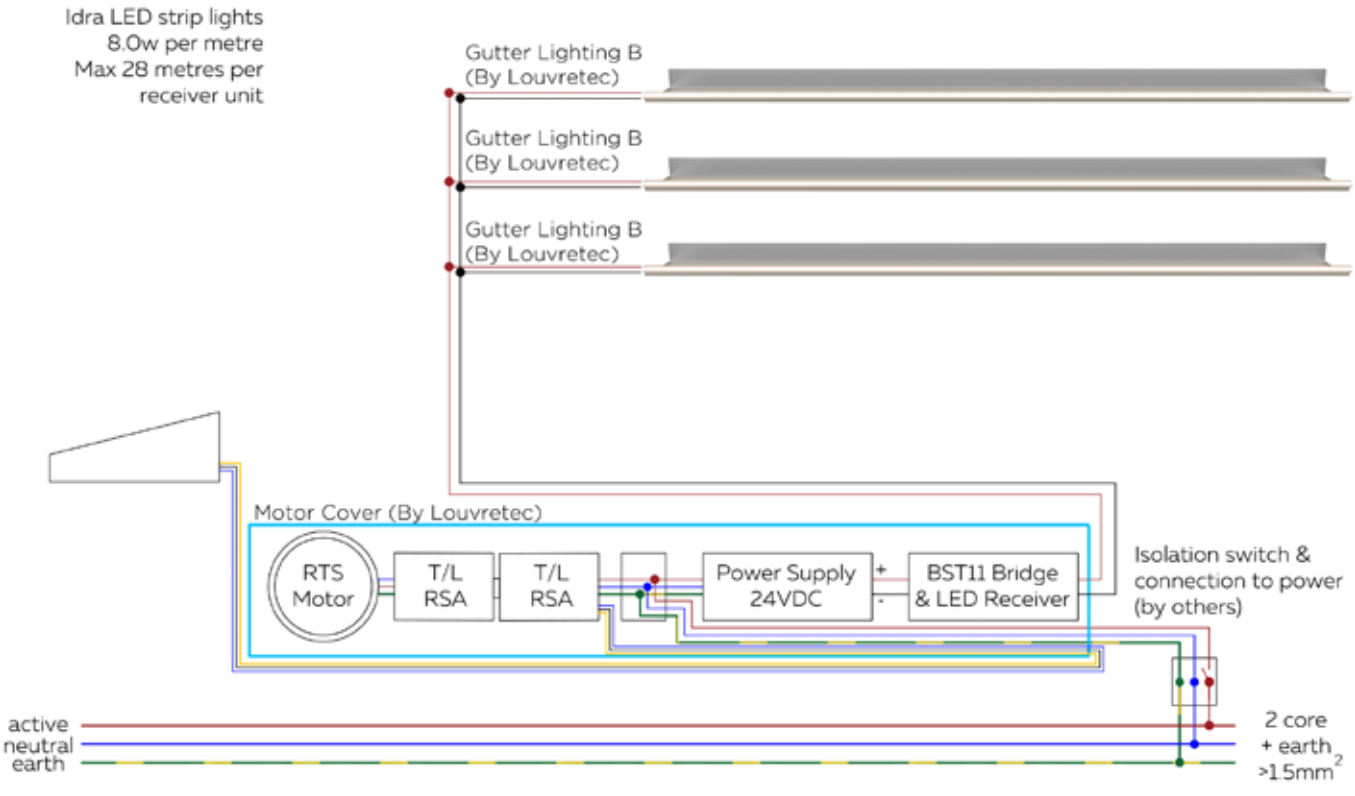





| | |
|---|---|
| Cable Required | 3 core double insulated heavy duty flex 3 x 1.5mm |
| Voltage | 230–240V/50Hz |
| Rated Current | 3.2 Amps |
| Current Comsumption | 770 Watts |



FILE: ELECTRICAL WIRING DIAGRAMS 14.24 DATE MODIFIED: 01/10/2024 SCALE:

www.louvretec.co.nz www.louvretec.com.au

©Louvretec 2025 – All Rights Reserved. Technical specifications subject to change without notice.

**WHITE LIGHTING**




Channel 1: Roofs
Channel 2: Roof A
Channel 3: Roof B
Channel 4: LED C

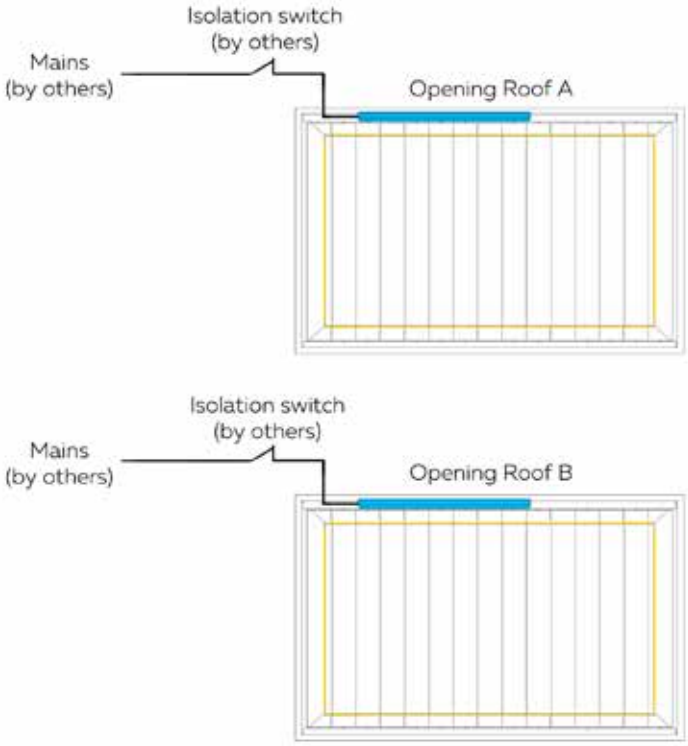


Idra LED strip lights
8.0w per metre
Max 28 metres per
receiver unit

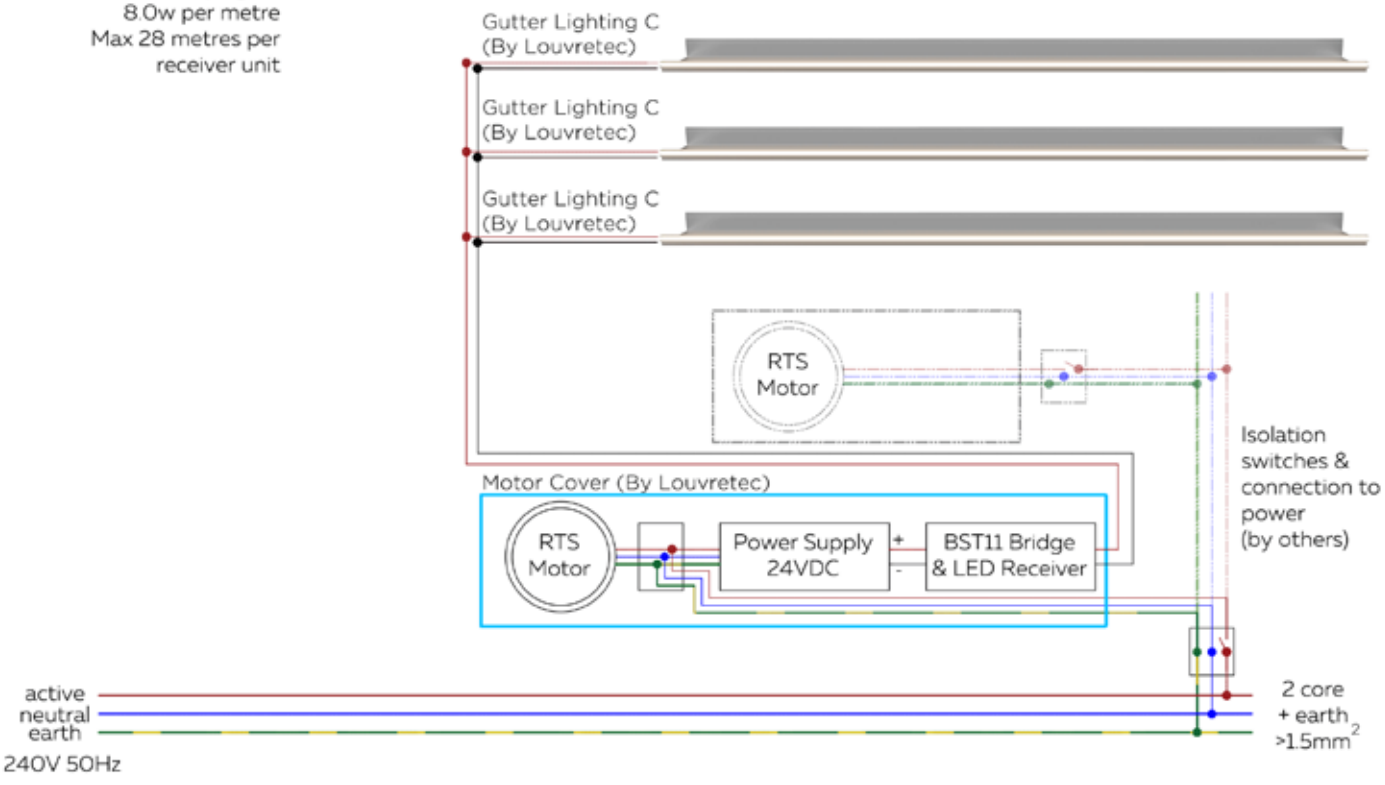


Cable protection (physical & UV) by others



Blue = Neutral
Brown = Live
Yellow/Green = Earth

| | |
|---|---|
| Cable Required | 3 core double insulated heavy duty flex 3 x 1.5mm |
| Voltage | 230–240V/50Hz |
| Rated Current | 2.5 Amps + 0.8 Amps per motor |
| Current Consumption | 570 Watts + 170 Watts per motor |


©Louvretec 2025 – All Rights Reserved. Technical specifications subject to change without notice.

## WIRING DETAIL : MULTIPLE SOMFY RTS MOTORS WITH LOUVRETEC GUTTER STRIP LIGHTING, LOUVRETEC/TELECO RAIN SENSOR ADATPOR, BST11 BRIDGE & SOMFY REMOTE

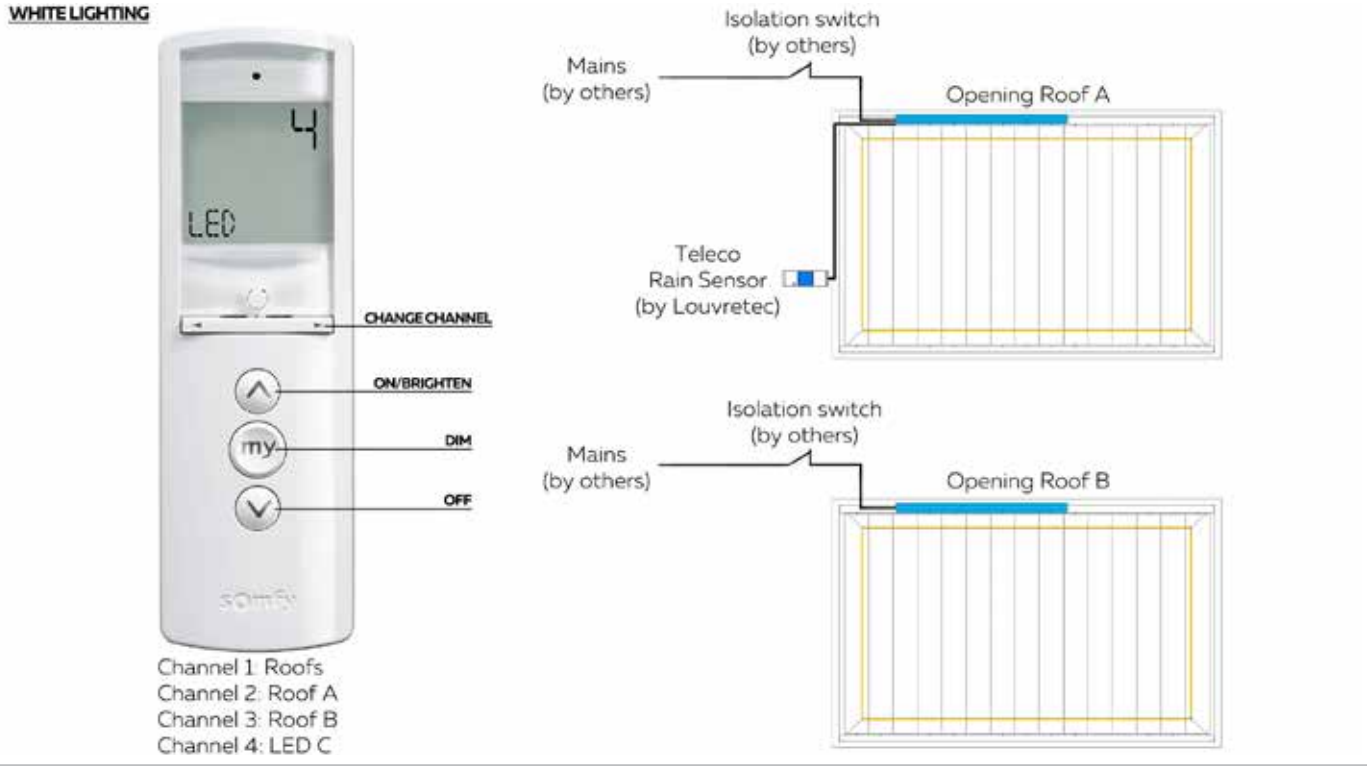


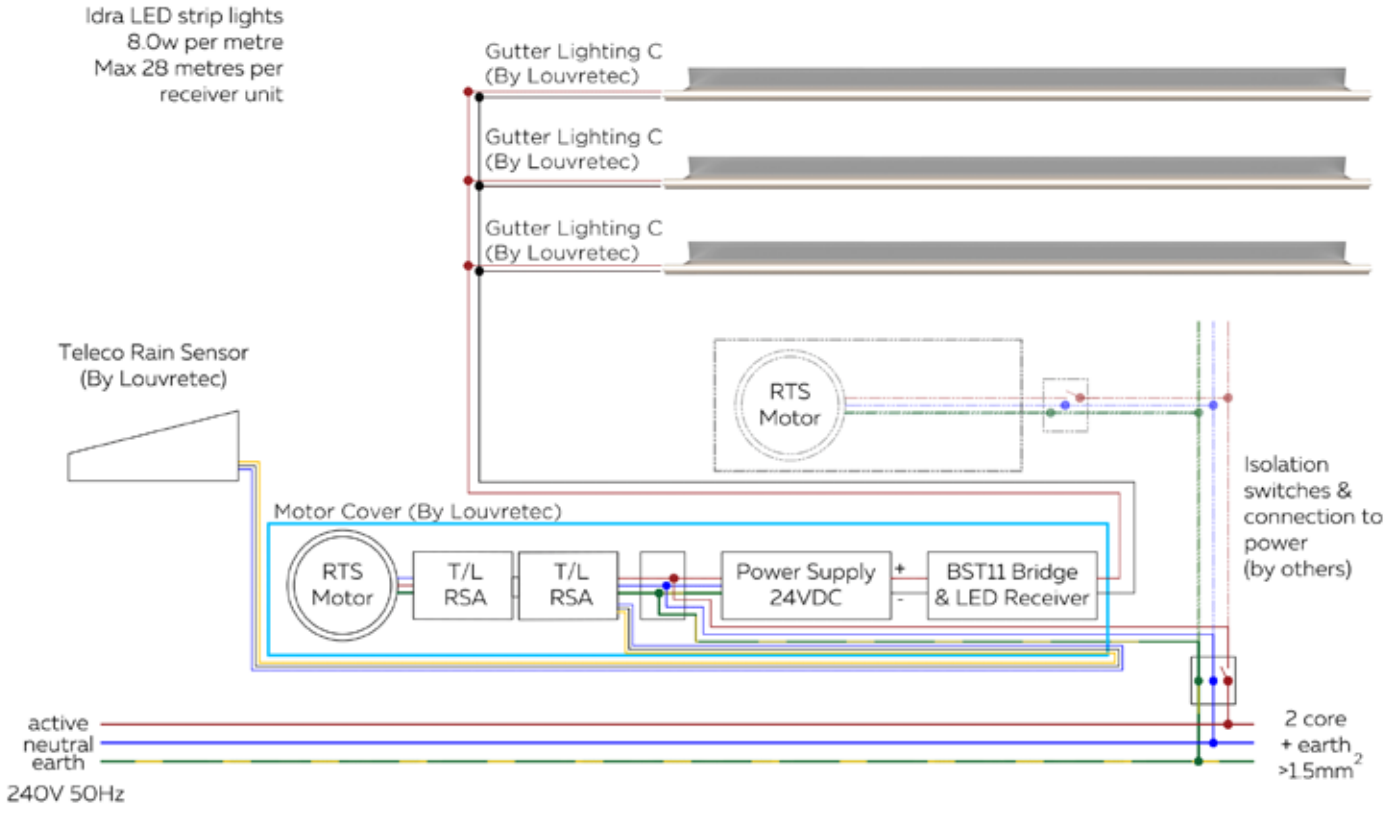


Cable protection (physical & UV) by others



Blue = Neutral
Brown = Live
Yellow/Green = Earth

| | |
|---|---|
| Cable Required | 3 core double insulated heavy duty flex 3 x 1.5mm |
| Voltage | 230–240V/50Hz |
| Rated Current | 2.5 Amps + 0.8 Amps per motor |
| Current Comsumption | 570 Watts + 170 Watts per motor |



FILE: ELECTRICAL WIRING DIAGRAMS 14.26 DATE MODIFIED: 01/10/2024 SCALE:
www.louvretec.co.nz www.louvretec.com.au

©Louvretec 2025 – All Rights Reserved. Technical specifications subject to change without notice.

**WHITE LIGHTING**




Channel 1: Roof A
Channel 2: LED B

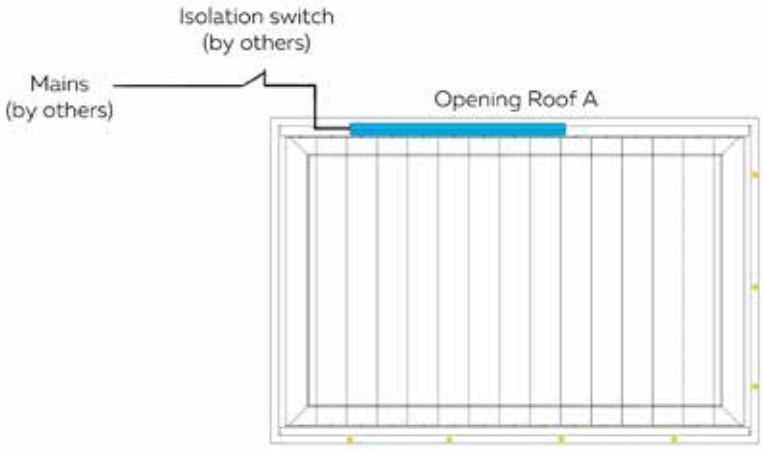


Mira Low LED down lights
3.5w per metre

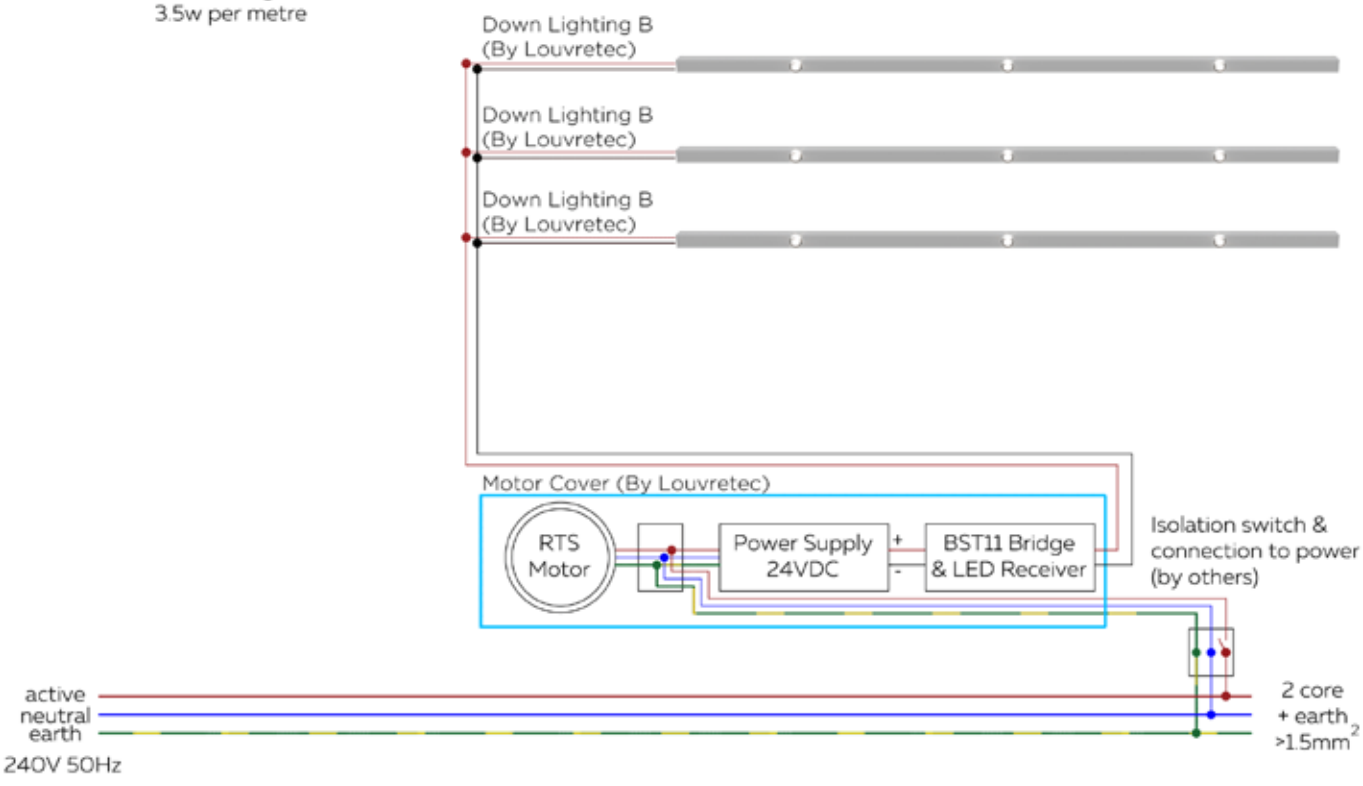


Cable protection (physical & UV) by others



Blue = Neutral
Brown = Live
Yellow/Green = Earth

| | |
|---|---|
| Cable Required | 3 core double insulated heavy duty flex 3 x 1.5mm |
| Voltage | 230–240V/50Hz |
| Rated Current | 3.2 Amps |
| Current Comsumption | 770 Watts |


©Louvretec 2025 – All Rights Reserved. Technical specifications subject to change without notice.

## WIRING DETAIL : SINGLE SOMFY RTS MOTOR WITH LOUVRETEC DOWN LIGHTING, RAIN SENSOR, BST11 BRIDGE & SOMFY REMOTE

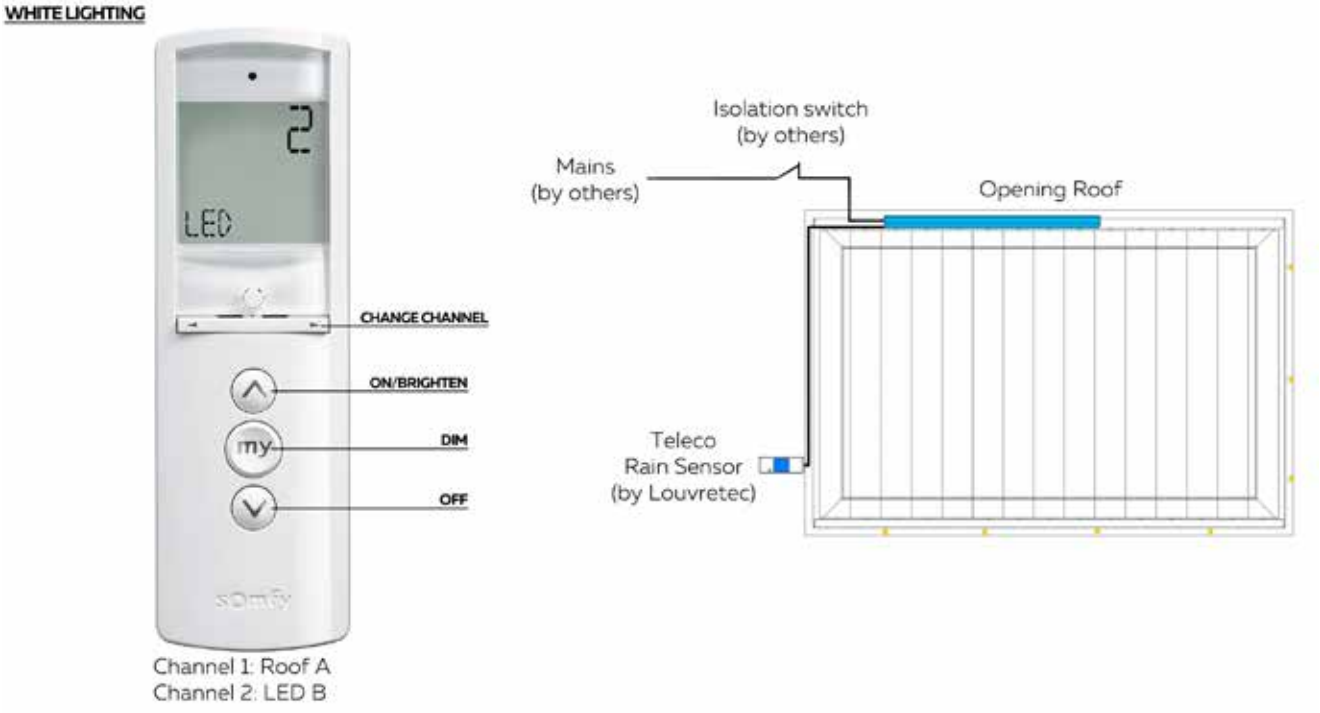


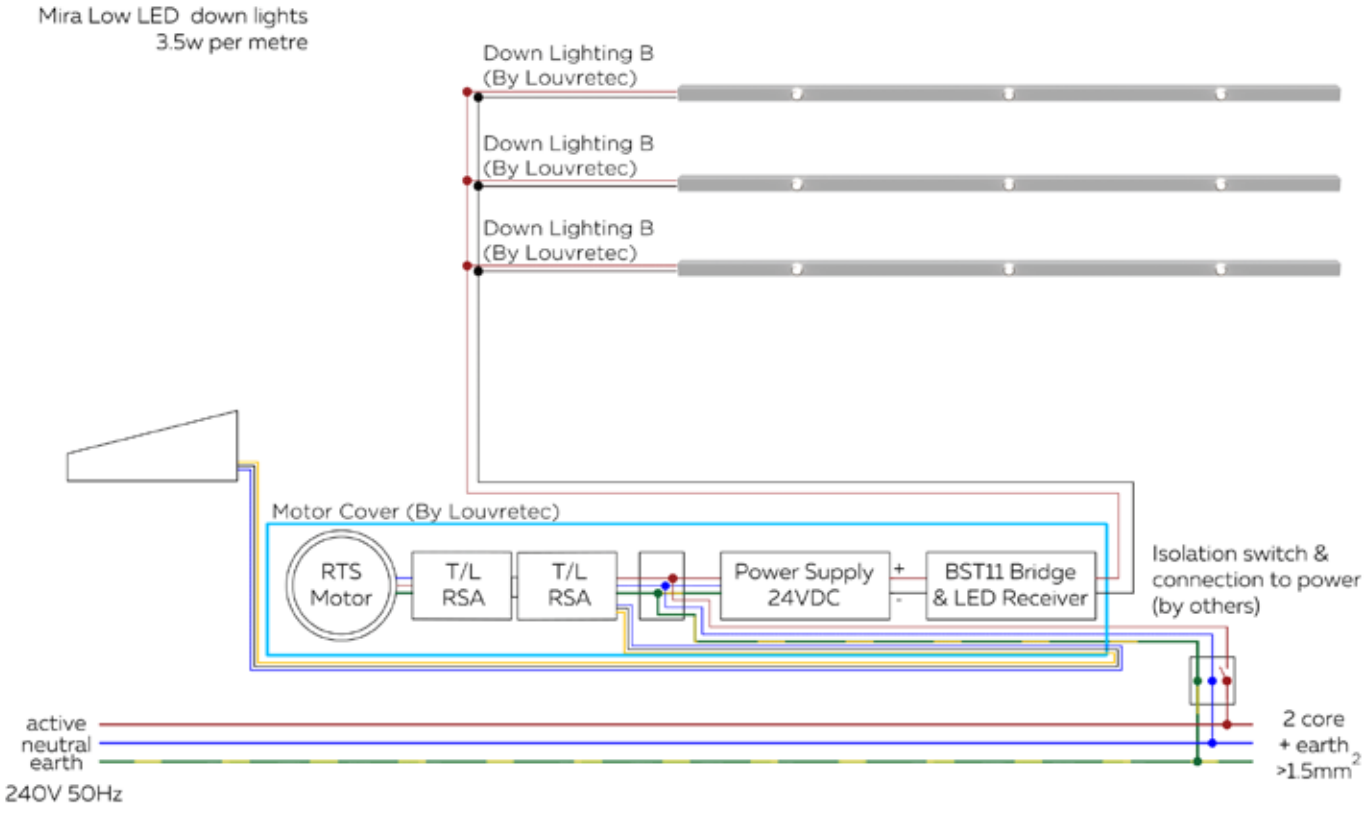





| | |
|---|---|
| Cable Required | 3 core double insulated heavy duty flex 3 x 1.5mm |
| Voltage | 230–240V/50Hz |
| Rated Current | 3.2 Amps |
| Current Comsumption | 770 Watts |



FILE: ELECTRICAL WIRING DIAGRAMS 14.28 DATE MODIFIED: 01/10/2024 SCALE:

www.louvretec.co.nz www.louvretec.com.au

©Louvretec 2025 – All Rights Reserved. Technical specifications subject to change without notice.

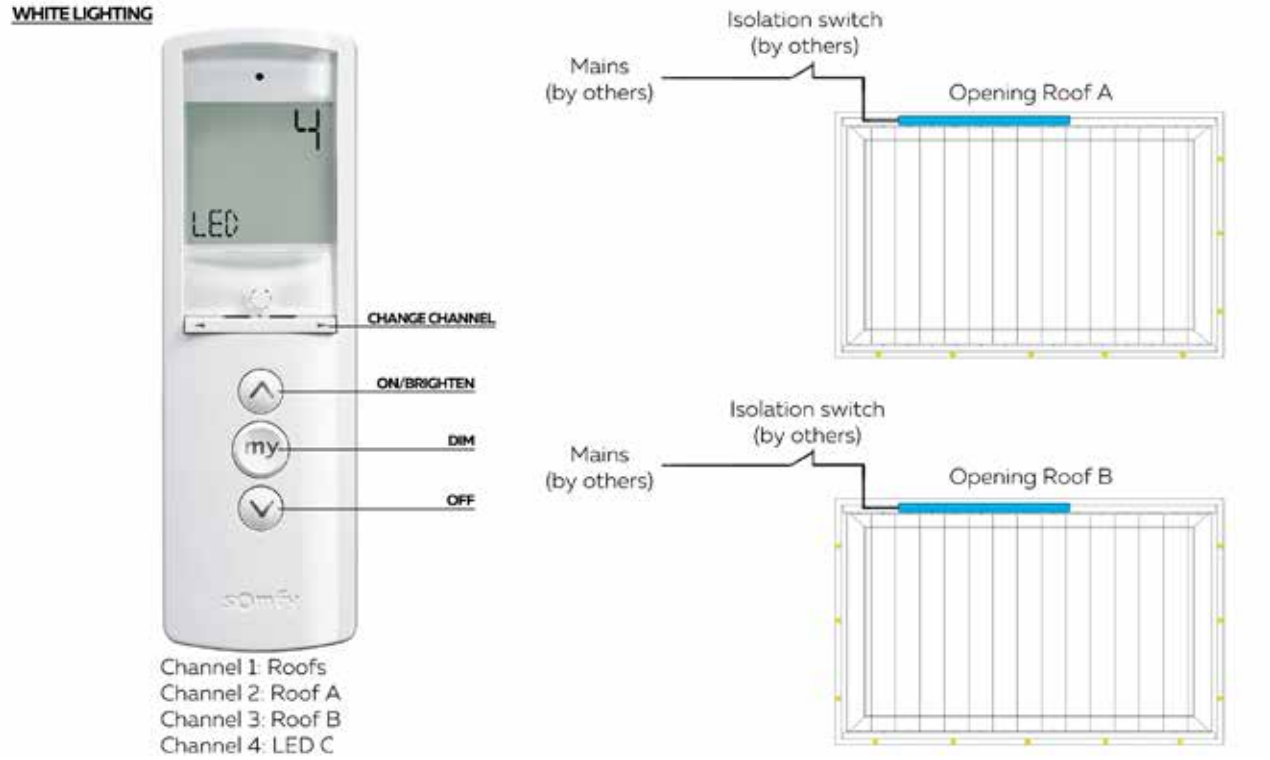


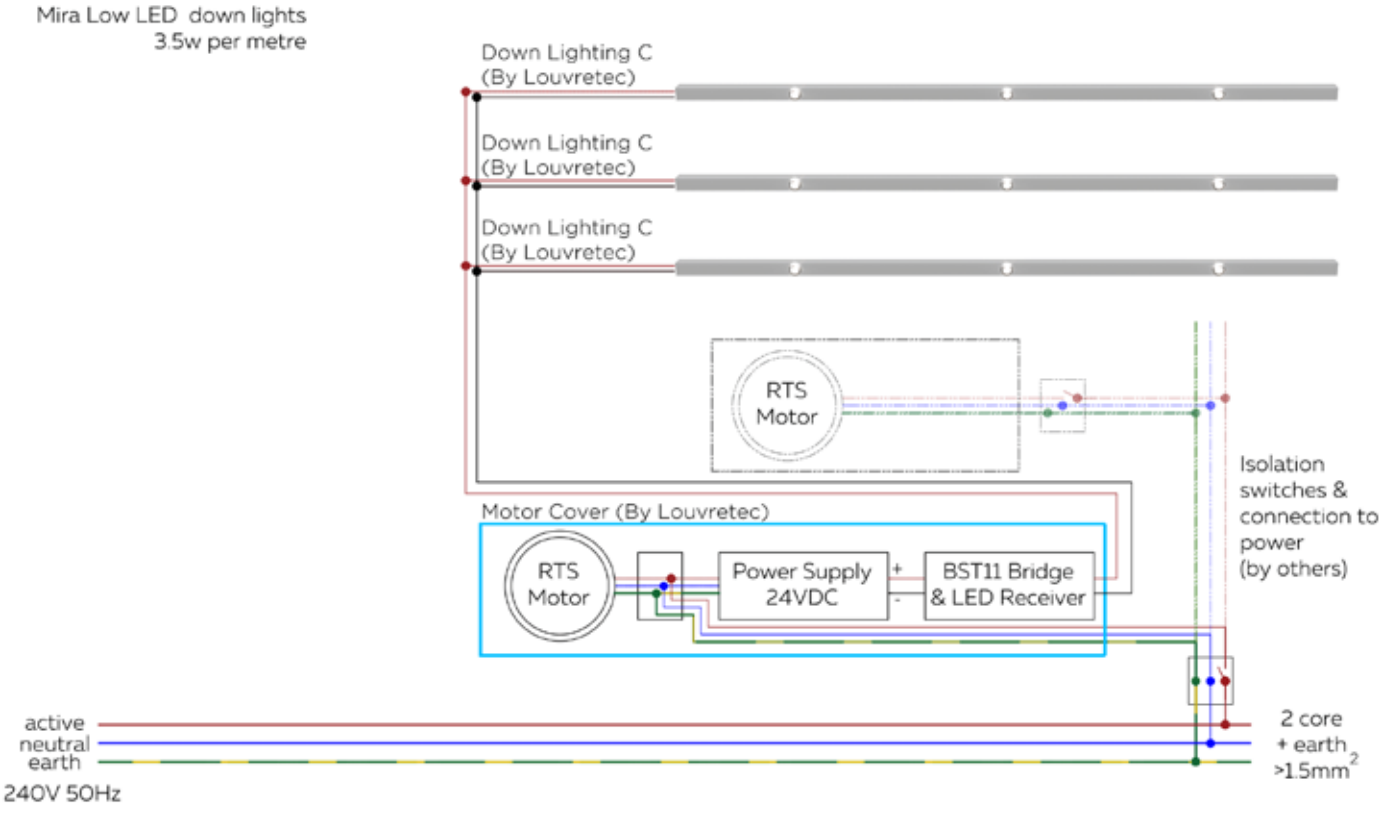


Cable protection (physical & UV) by others




| | |
|---|---|
| Cable Required | 3 core double insulated heavy duty flex 3 x 1.5mm |
| Voltage | 230–240V/50Hz |
| Rated Current | 2.5 Amps + 0.8 Amps per motor |
| Current Comsumption | 570 Watts + 170 Watts per motor |


©Louvretec 2025 – All Rights Reserved. Technical specifications subject to change without notice.

## WIRING DETAIL : MULTIPLE SOMFY RTS MOTORS WITH LOUVRETEC DOWN LIGHTING, RAIN SENSOR, BST11 BRIDGE & SOMFY REMOTE

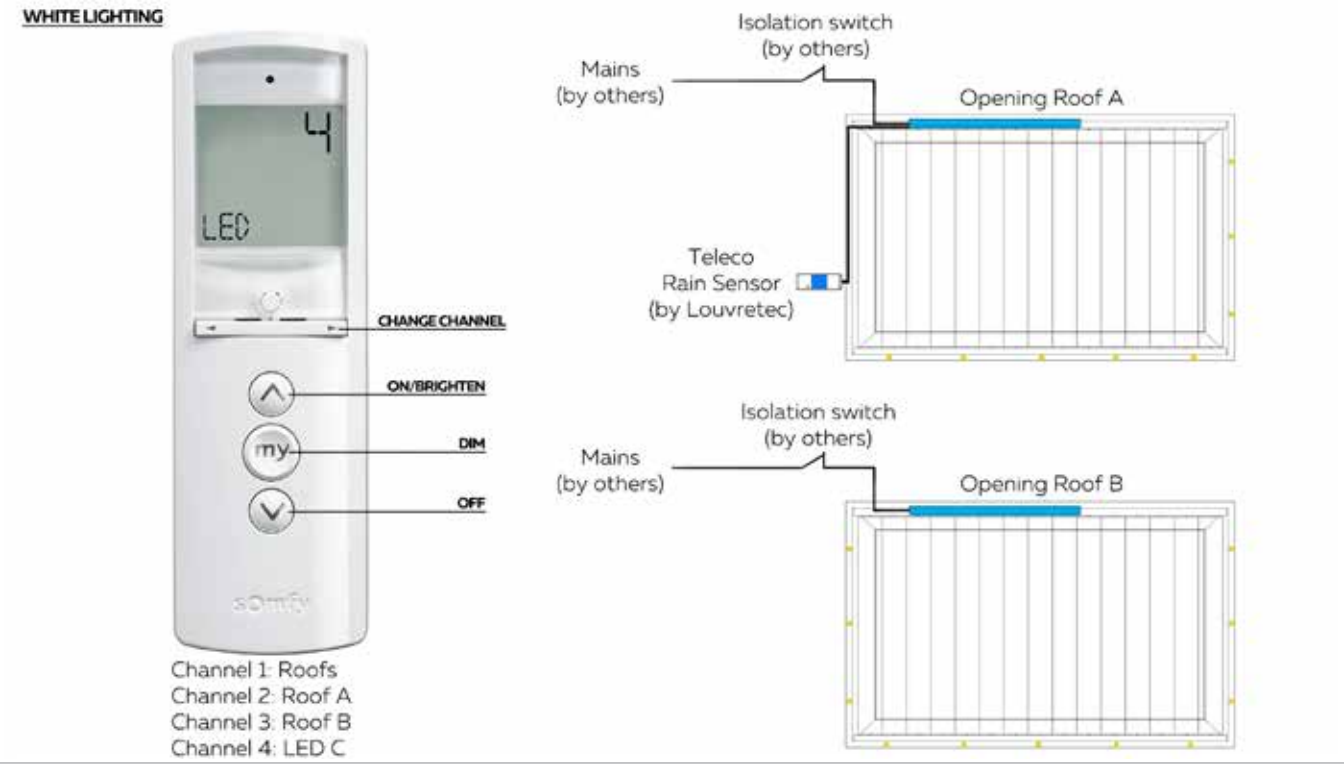


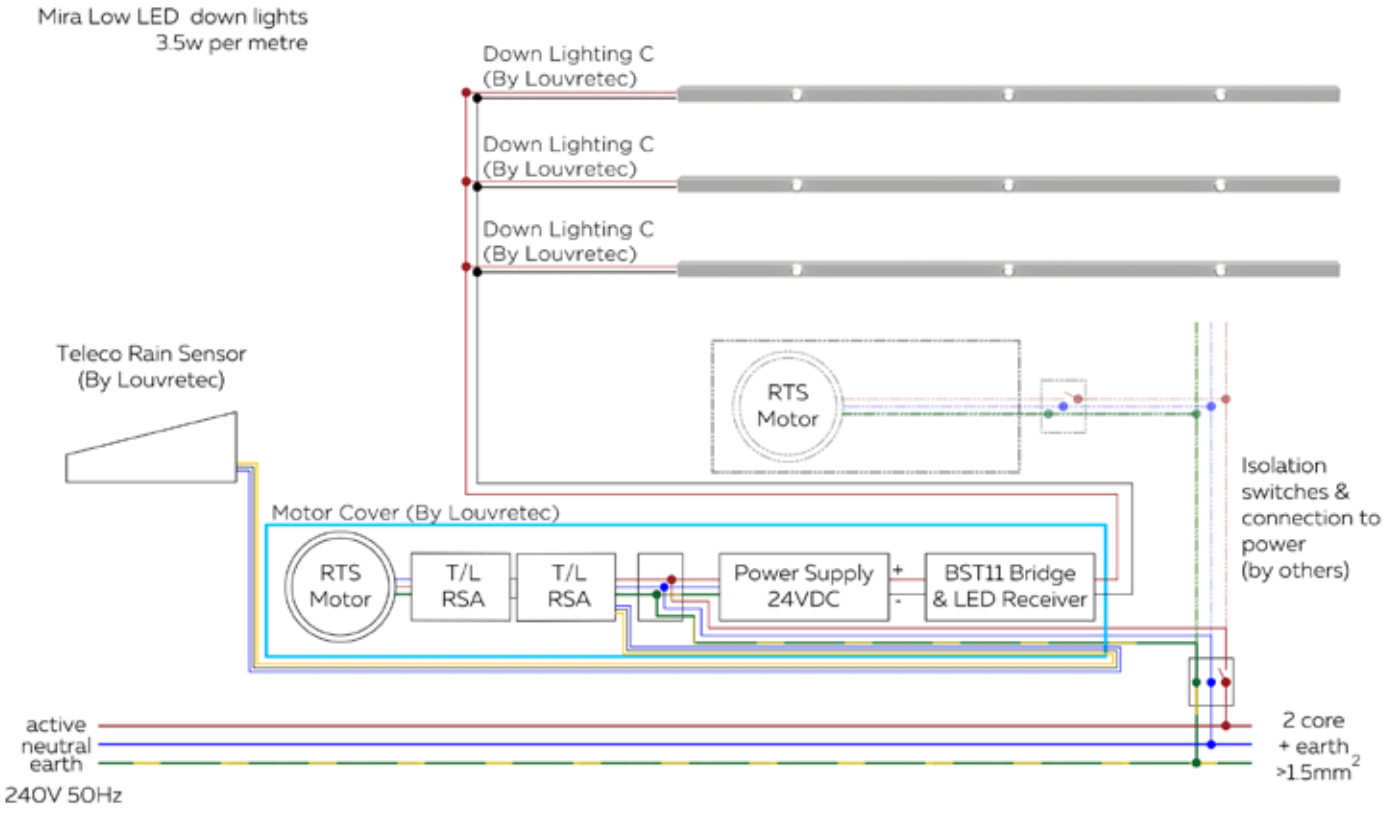





| | |
|---|---|
| Cable Required | 3 core double insulated heavy duty flex 3 x 1.5mm |
| Voltage | 230–240V/50Hz |
| Rated Current | 2.5 Amps + 0.8 Amps per motor |
| Current Comsumption | 570 Watts + 170 Watts per motor |



FILE: ELECTRICAL WIRING DIAGRAMS 14.30 DATE MODIFIED: 01/10/2024 SCALE:

www.louvretec.co.nz www.louvretec.com.au

©Louvretec 2025 – All Rights Reserved. Technical specifications subject to change without notice.

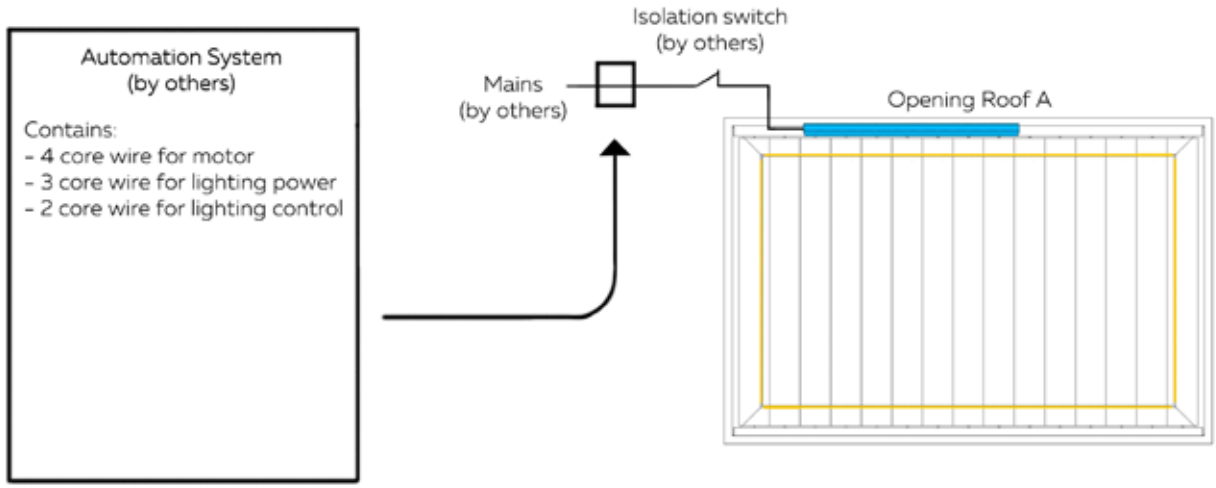


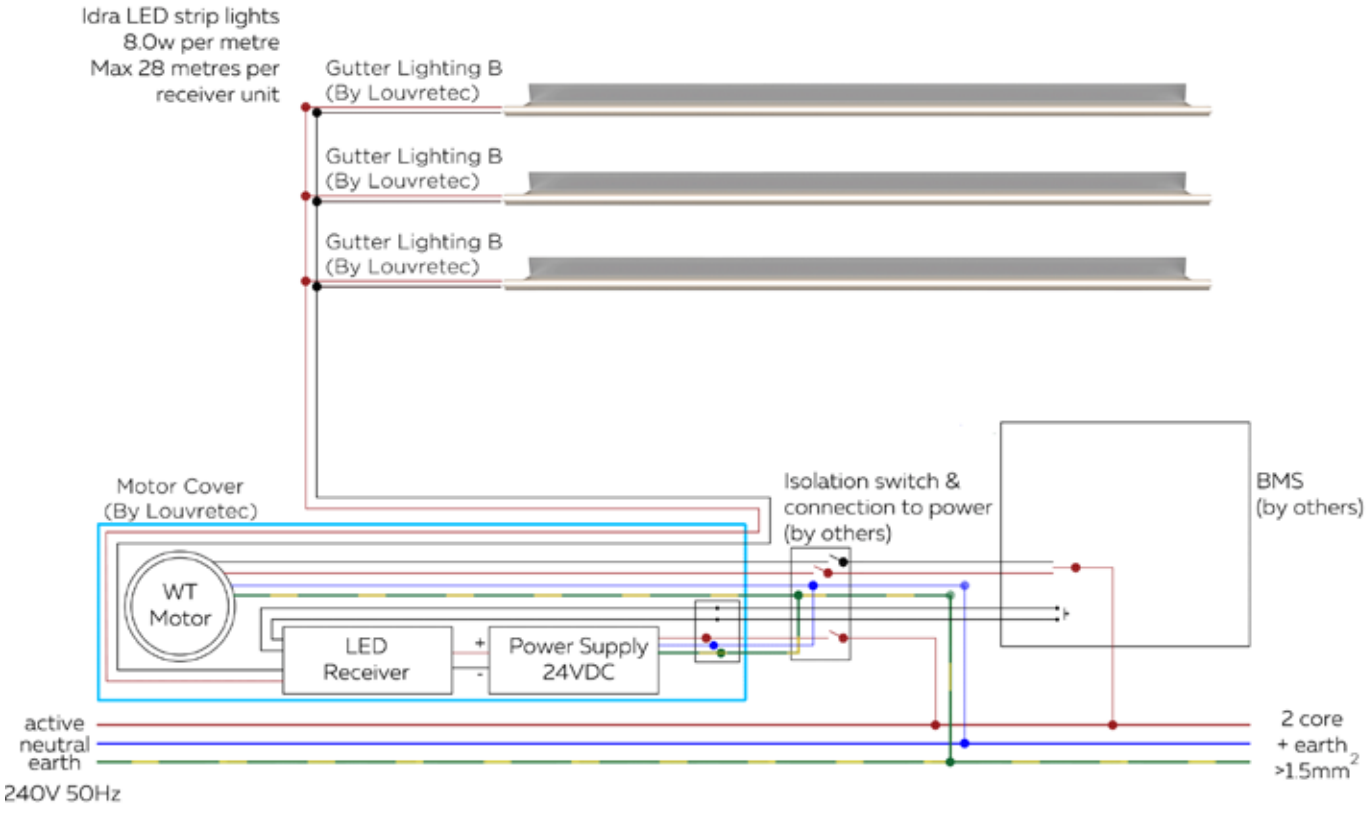


Cable protection (physical & UV) by others



Blue = Neutral
Brown = Direction 1
Black = Direction 2
Yellow/Green = Earth

| | |
|---|---|
| Cable Required | 4 core double insulated heavy duty flex<br>4 x 1.5mm |
| Voltage | 230–240V/50Hz |
| Rated Current | 3.2 Amps |
| Current Comsumption | 770 Watts |


©Louvretec 2025 – All Rights Reserved. Technical specifications subject to change without notice.

## WIRING DETAIL : SINGLE SOMFY WT MOTOR WITH LOUVRETEC GUTTER STRIP LIGHTING, RAIN SENSOR & CONTROLLED BY BMS

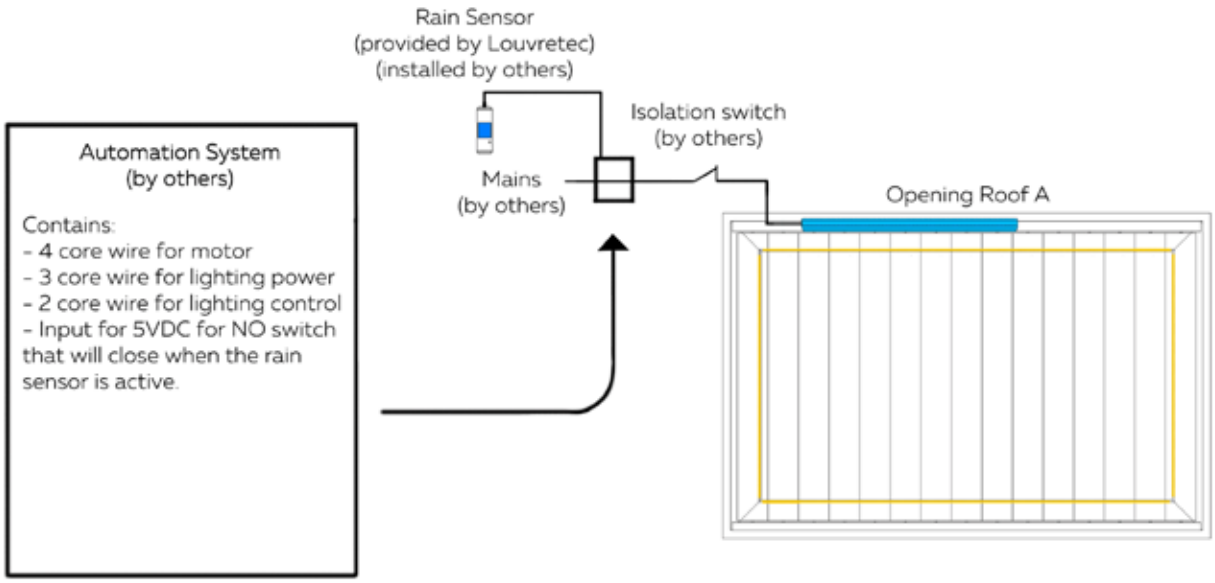


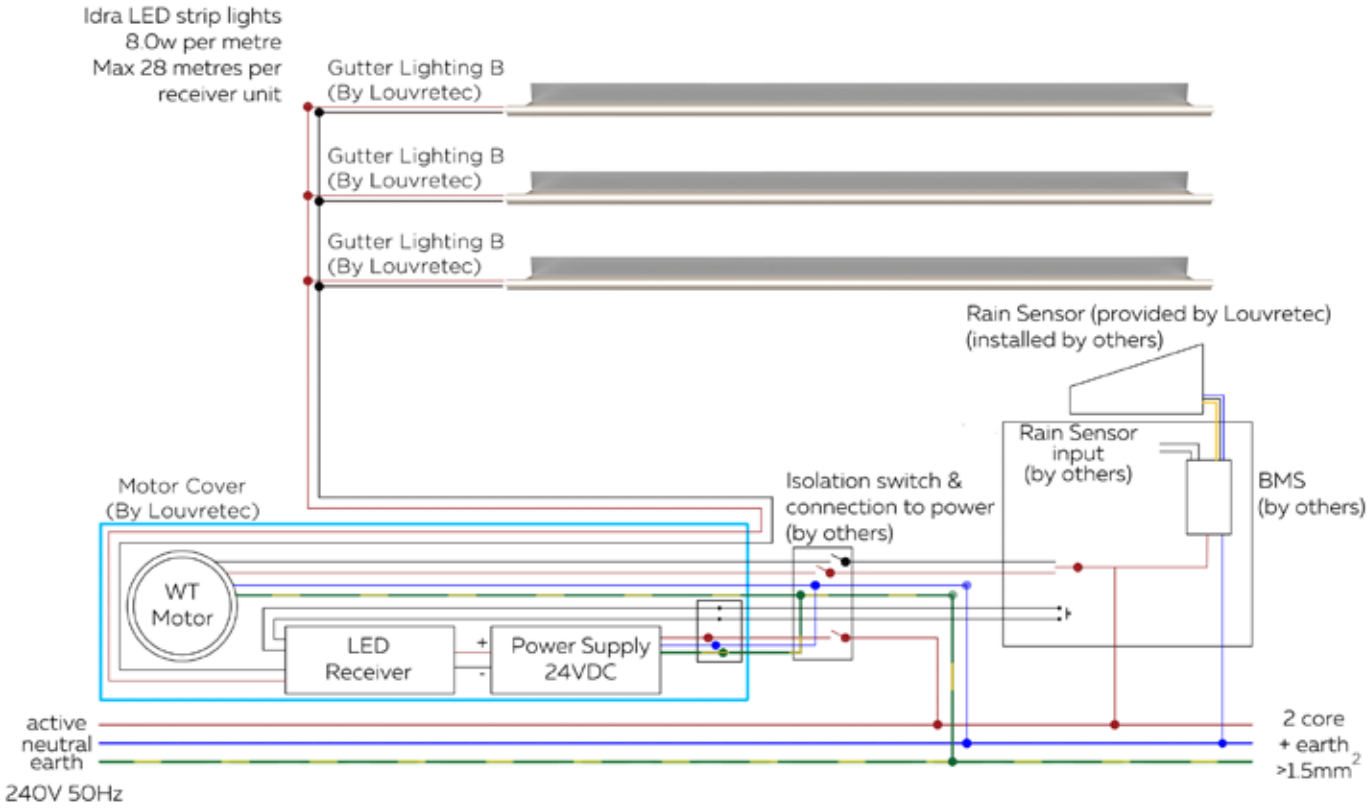


Cable protection (physical & UV) by others



Blue = Neutral
Brown = Direction 1
Black = Direction 2
Yellow/Green = Earth

| | |
|---|---|
| Cable Required | 4 core double insulated heavy duty flex 4 x 1.5mm |
| Voltage | 230–240V/50Hz |
| Rated Current | 3.2 Amps |
| Current Comsumption | 770 Watts |



LouvreTec®



©Louvretec 2025 – All Rights Reserved. Technical specifications subject to change without notice.

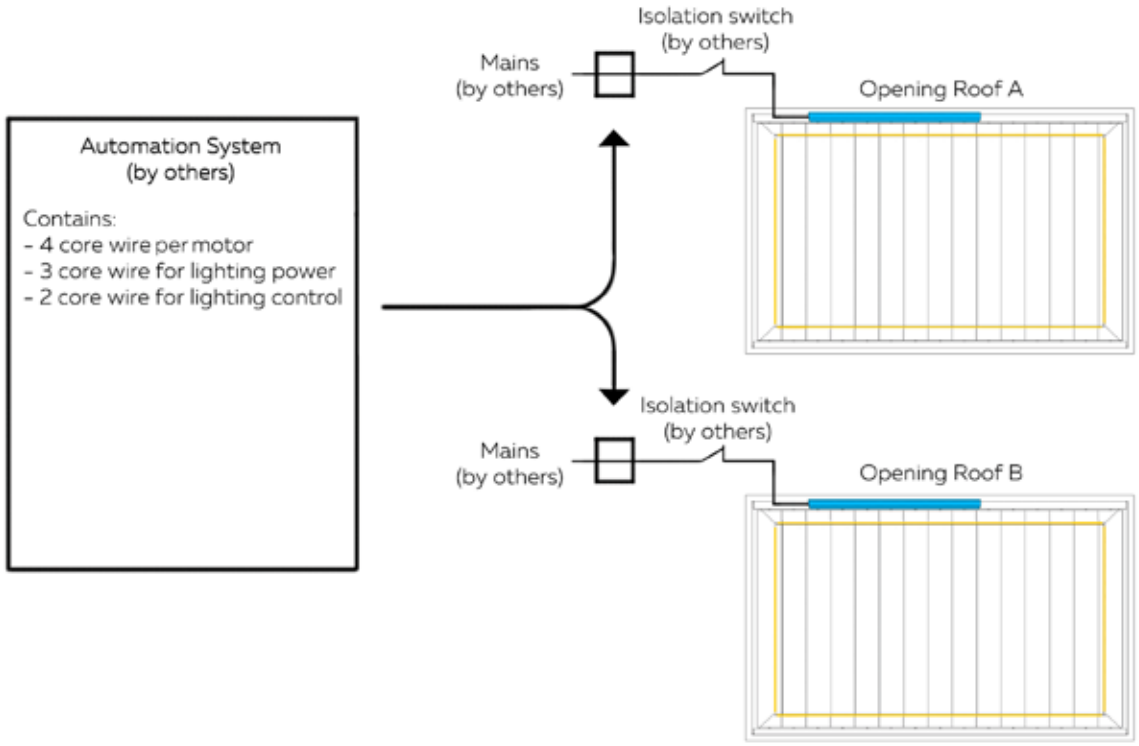


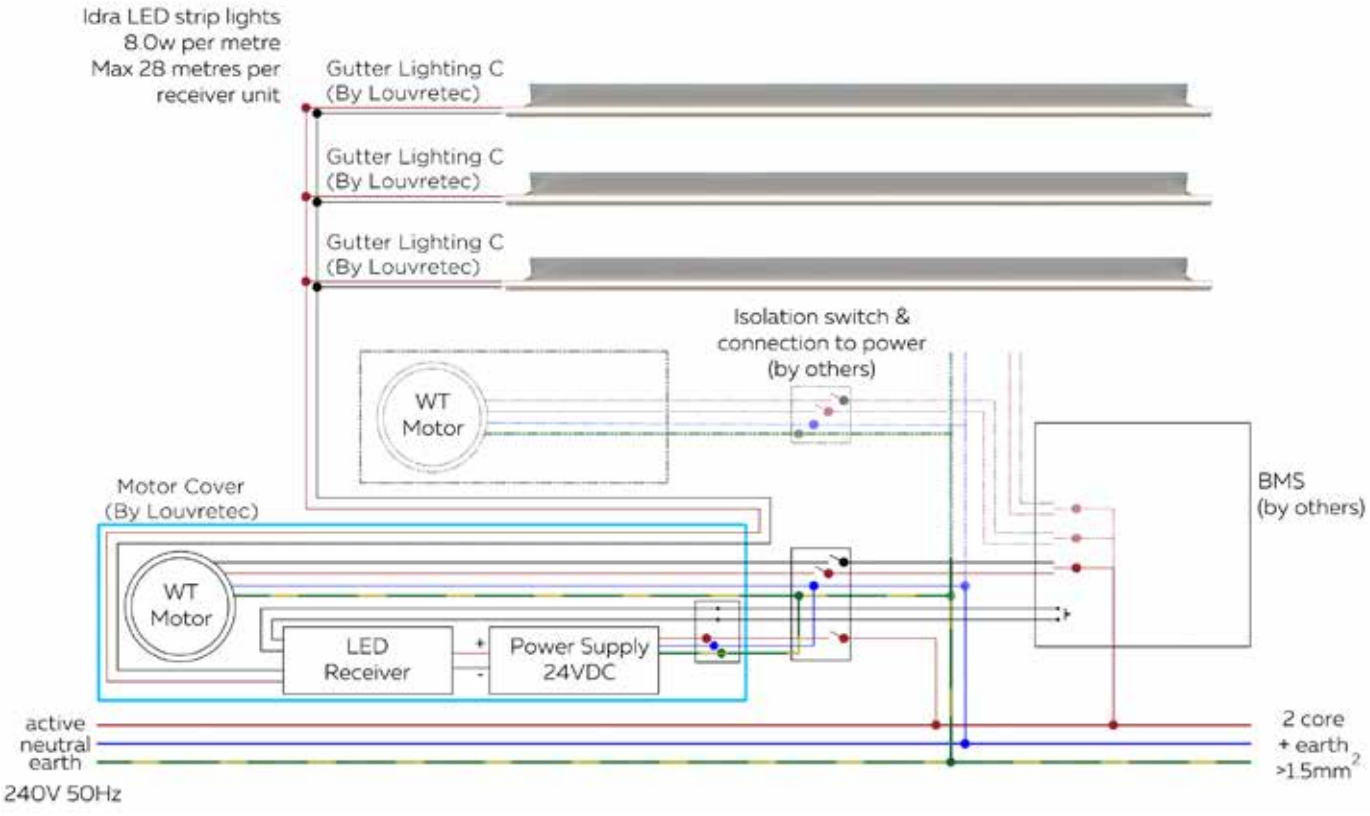


Cable protection (physical & UV) by others



Blue = Neutral
Brown = Direction 1
Black = Direction 2
Yellow/Green = Earth

Do Not Parallel Wire

| | |
|---|---|
| Cable Required | 4 core double insulated heavy duty flex 4 x 1.5mm |
| Voltage | 230–240V/50Hz |
| Rated Current | 3.2 Amps + 0.8 Amps per motor |
| Current Comsumption | 570 Watts + 192 Watts per motor |


©Louvretec 2025 – All Rights Reserved. Technical specifications subject to change without notice.

## WIRING DETAIL : MULTIPLE SOMFY WT MOTORS WITH LOUVRETEC GUTTER STRIP LIGHTING, RAIN SENSOR & CONTROLLED BY BMS

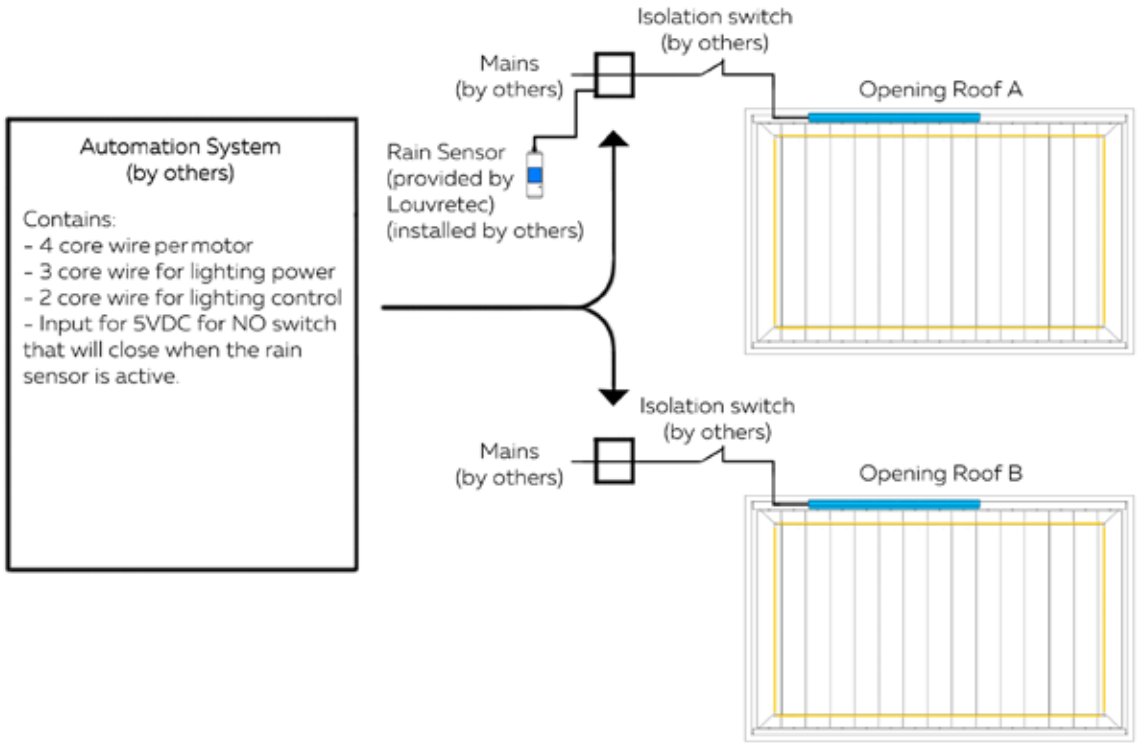


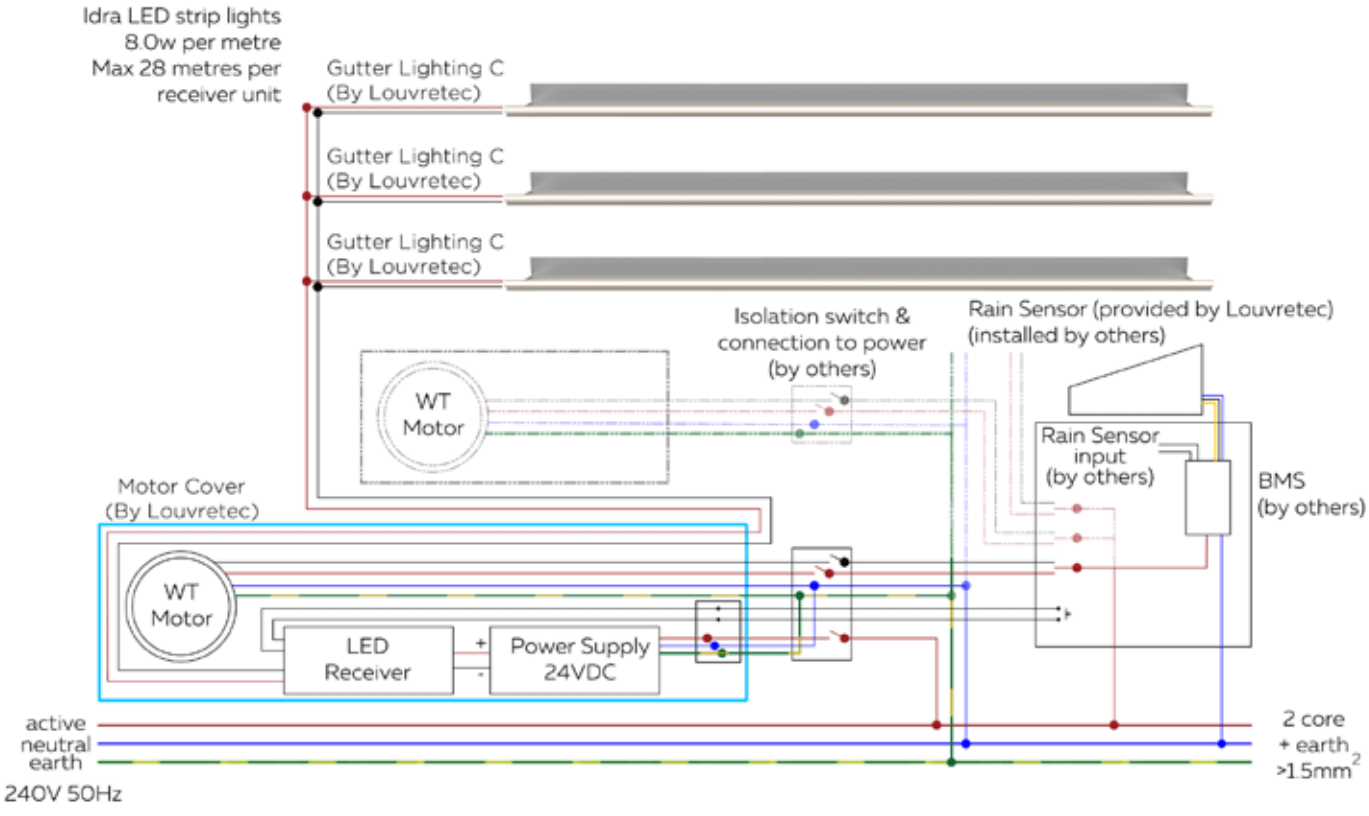


Cable protection (physical & UV) by others

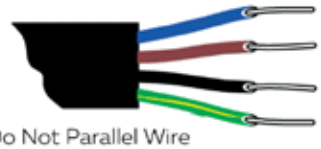

Do Not Parallel Wire

Blue = Neutral
Brown = Direction 1
Black = Direction 2
Yellow/Green = Earth

| | |
|---|---|
| Cable Required | 4 core double insulated heavy duty flex 4 x 1.5mm |
| Voltage | 230–240V/50Hz |
| Rated Current | 3.2 Amps + 0.8 Amps per motor |
| Current Comsumption | 770 Watts + 192 Watts per motor |





©Louvretec 2025 – All Rights Reserved. Technical specifications subject to change without notice.

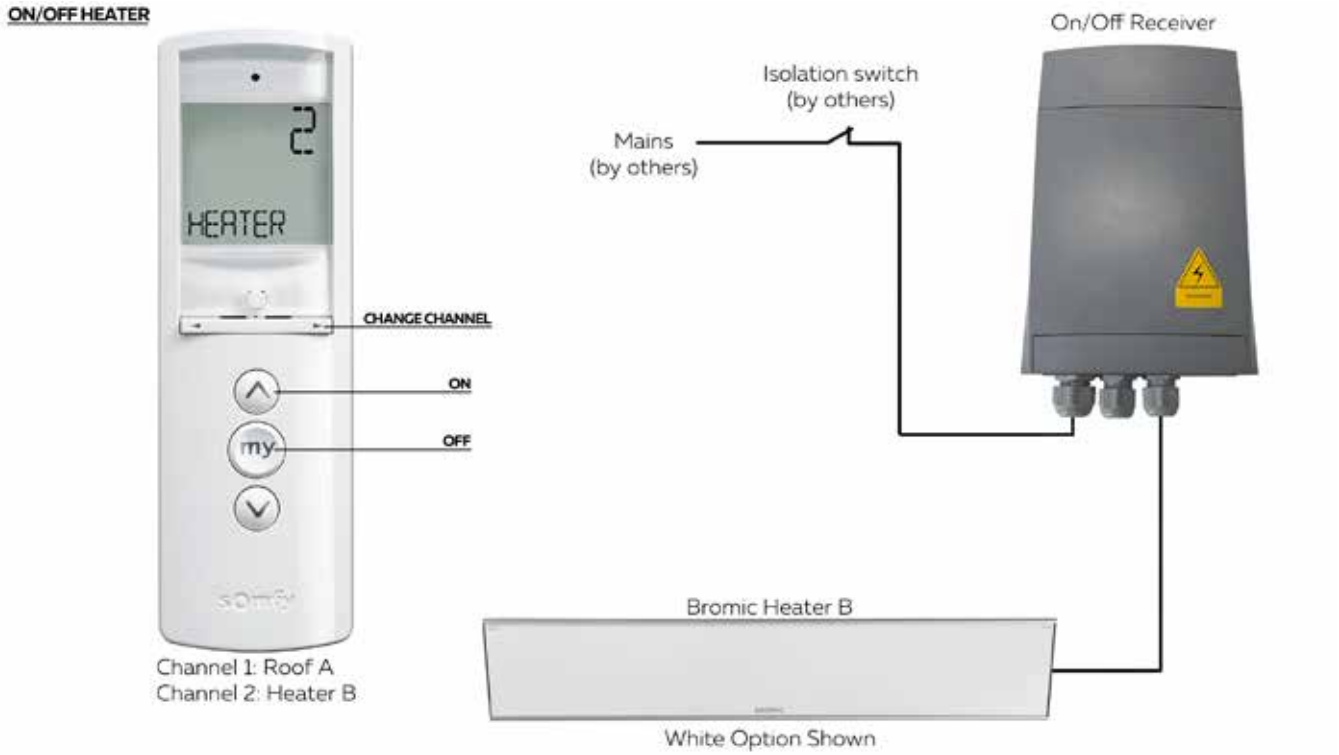


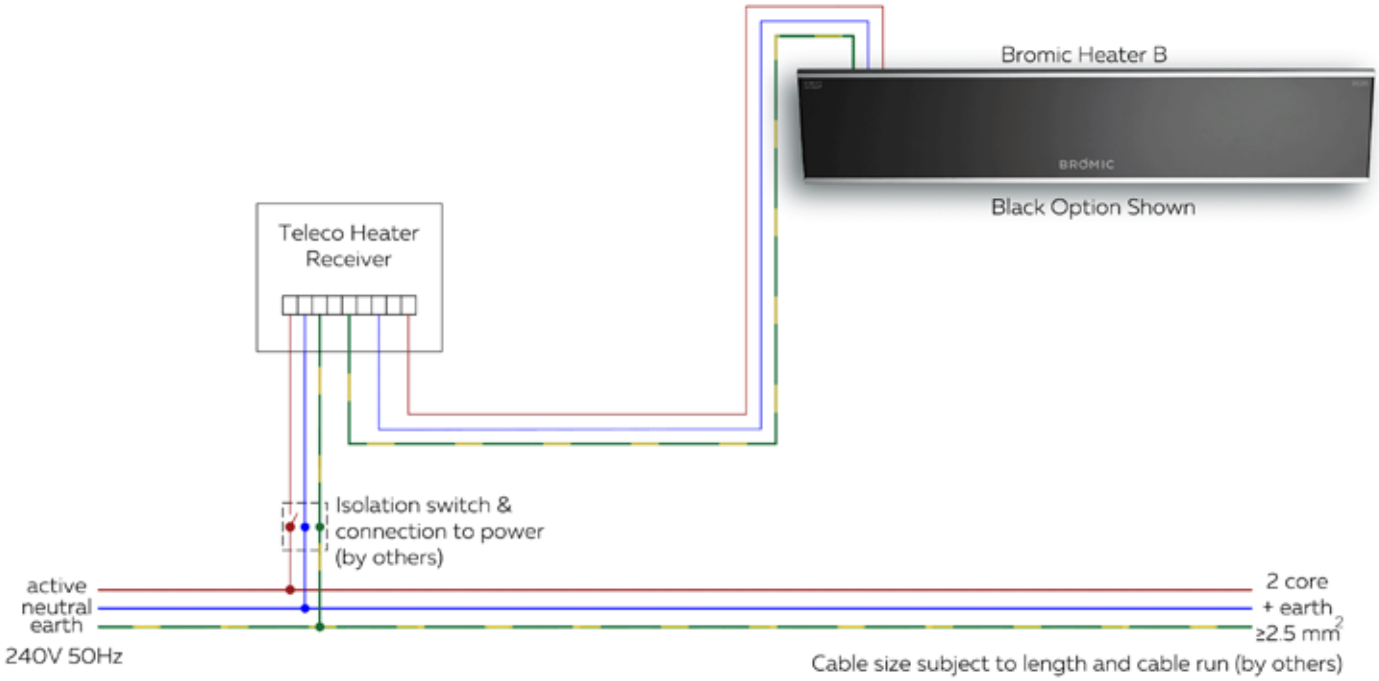


Cable protection (physical & UV) by others



Blue = Neutral
Brown = Live
Yellow/Green = Earth

| | |
|---|---|
| Cable Required | 3 core double insulated heavy duty flex 3 x ≥2.5mm |
| Voltage | 230–240V/50Hz |
| Rated Current | 10 - 14.2 Amps |
| Current Comsumption | 2.4 - 3.4KW |


©Louvretec 2025 – All Rights Reserved. Technical specifications subject to change without notice.

## WIRING DETAIL : SINGLE 4.5KW ON/OFF BROMIC HEATER WITH SOMFY REMOTE

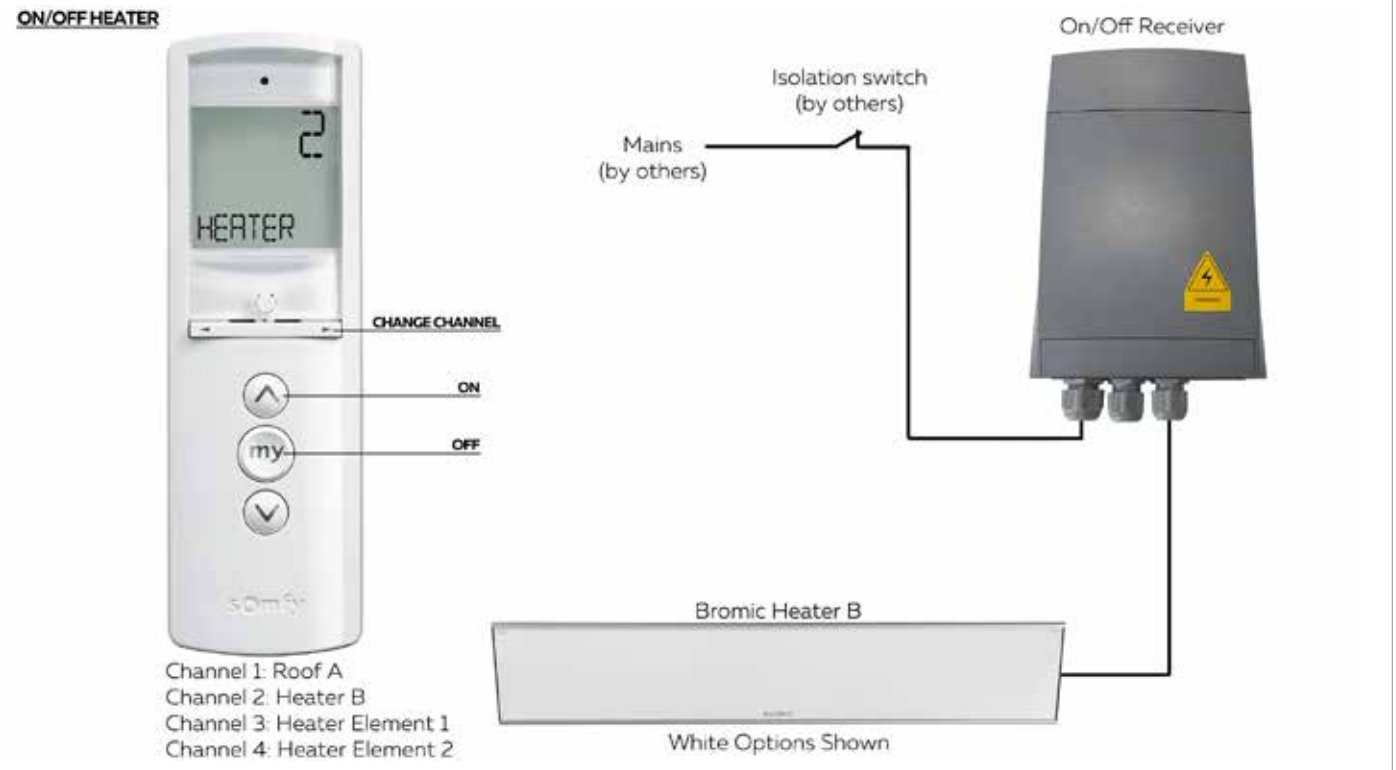


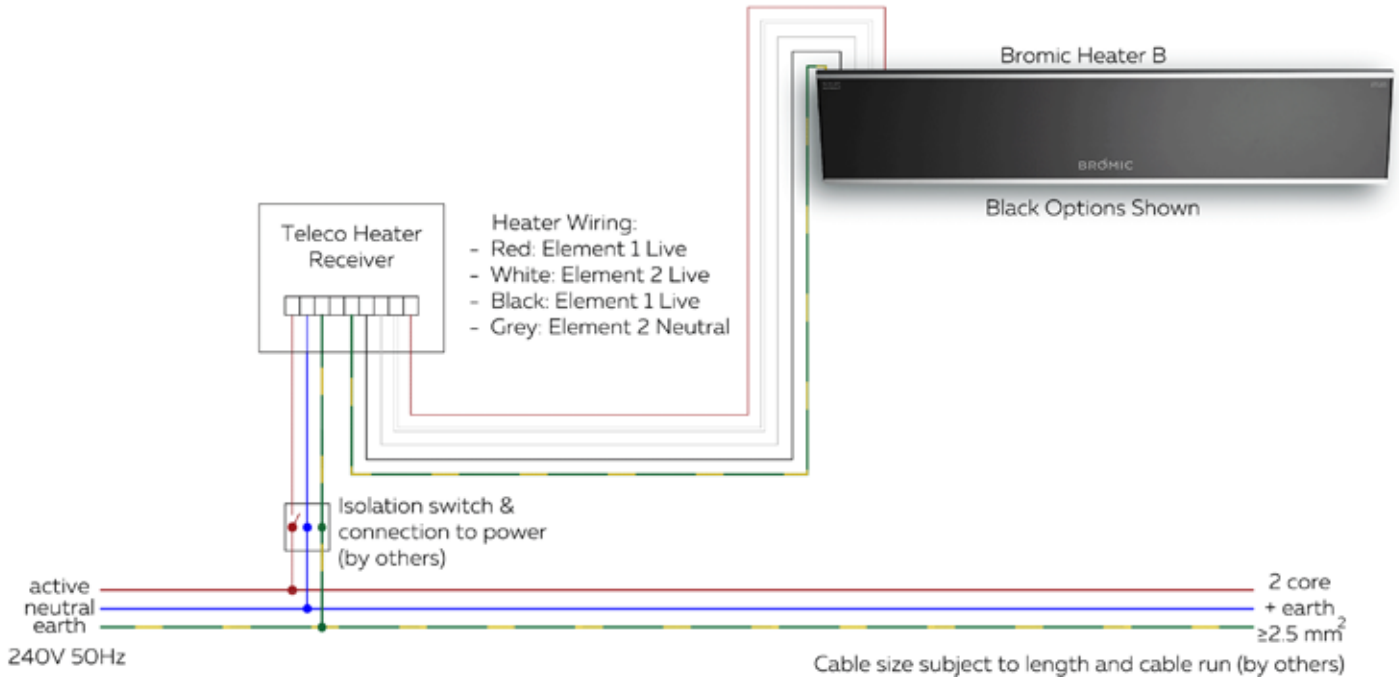





| | |
|---|---|
| Cable Required | 3 core double insulated heavy duty flex<br>3 x ≥2.5mm |
| Voltage | 230–240V/50Hz |
| Rated Current | 19 Amps |
| Current Comsumption | 4.5KW |



FILE: ELECTRICAL WIRING DIAGRAMS 14.36 DATE MODIFIED: 01/10/2024 SCALE:

www.louvretec.co.nz www.louvretec.com.au

©Louvretec 2025 – All Rights Reserved. Technical specifications subject to change without notice.

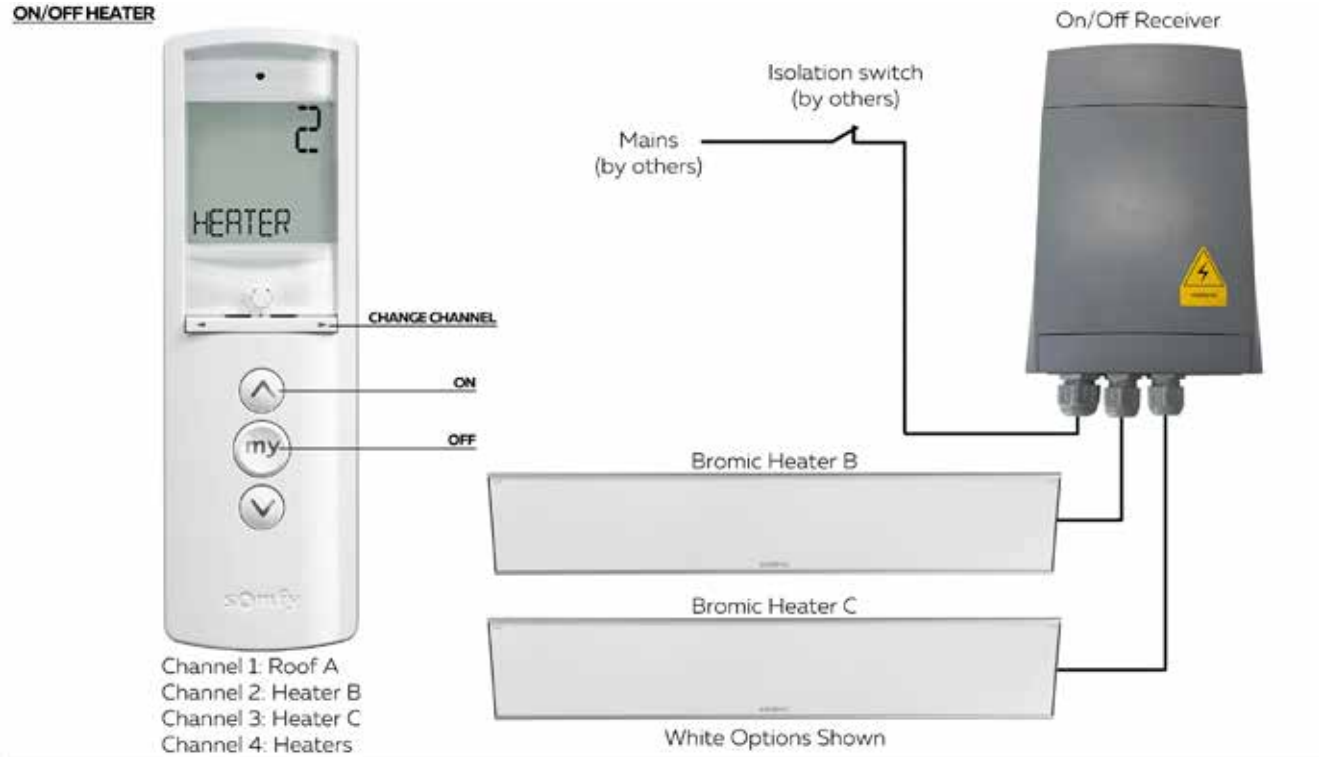


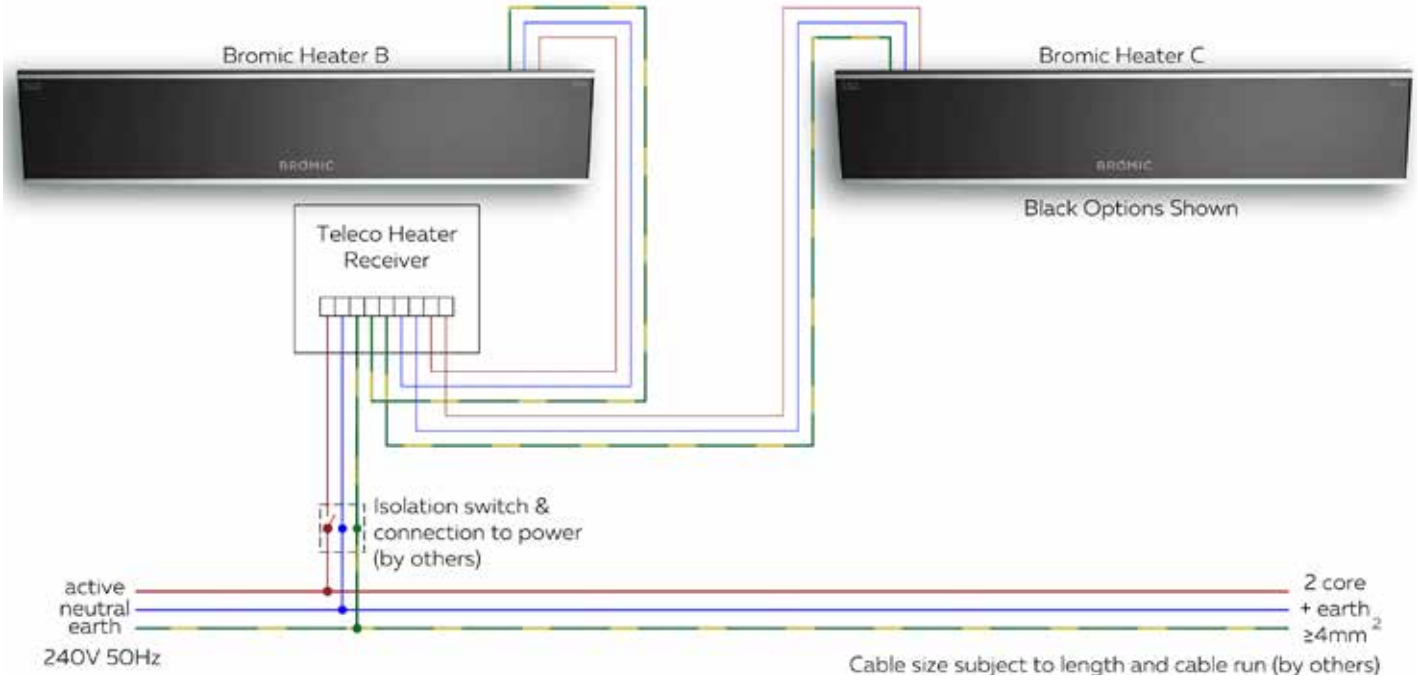


Cable protection (physical & UV) by others




| | |
|---|---|
| Cable Required | 3 core double insulated heavy duty flex<br>3 x ≥4mm supply & 3 x 2.5mm to heaters |
| Voltage | 230–240V/50Hz |
| Rated Current | 10 - 14.2 Amps per heater |
| Current Comsumption | 2.4 - 3.4KW per heater |


©Louvretec 2025 – All Rights Reserved. Technical specifications subject to change without notice.

## WIRING DETAIL : SINGLE DIMMABLE BROMIC HEATER WITH SOMFY REMOTE

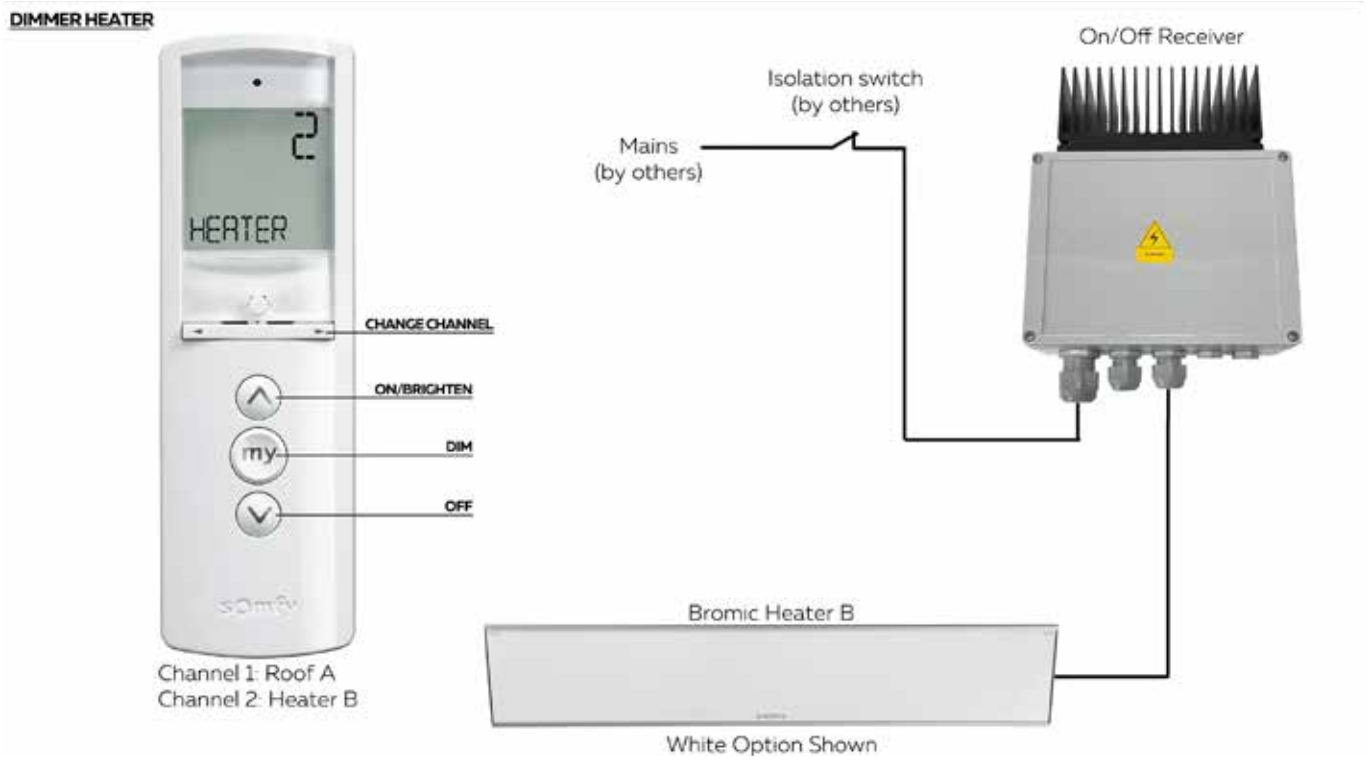


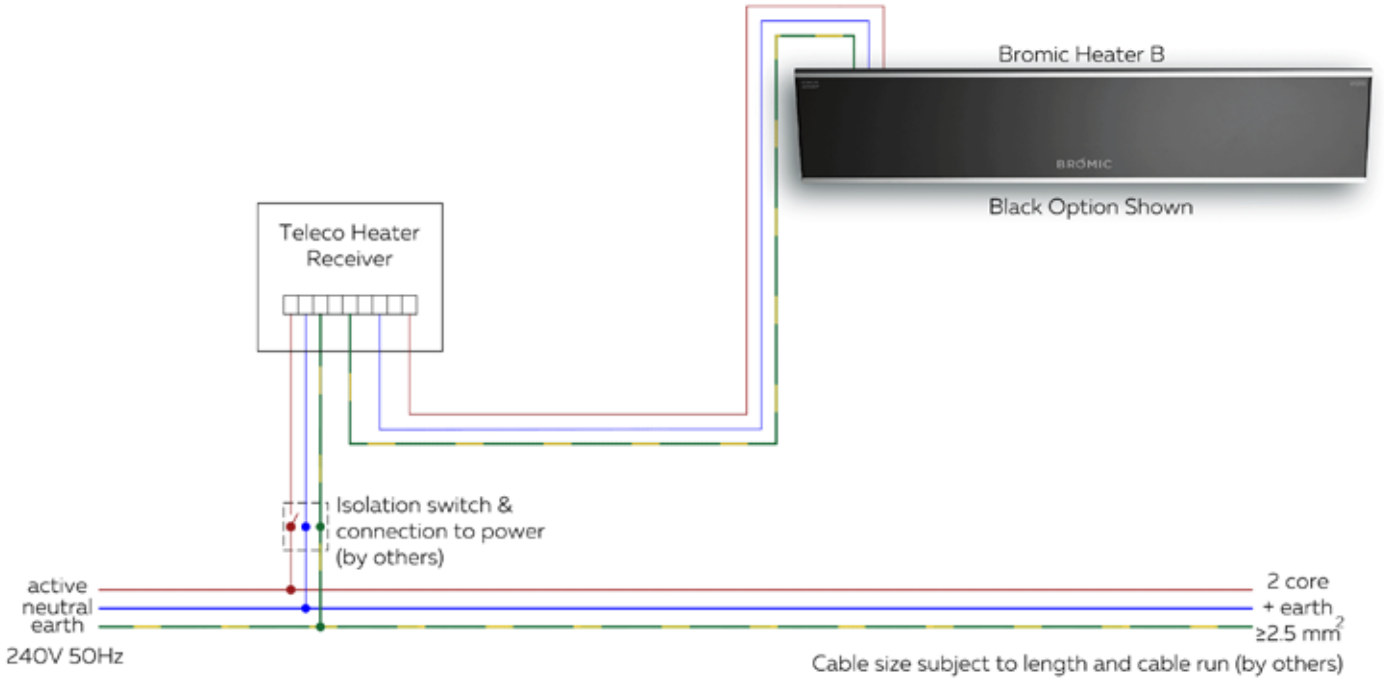


Cable protection (physical & UV) by others



Blue = Neutral
Brown = Live
Yellow/Green = Earth

| | |
|---|---|
| Cable Required | 3 core double insulated heavy duty flex 3 x ≥2.5mm |
| Voltage | 230–240V/50Hz |
| Rated Current | 10 - 14.2 Amps |
| Current Comsumption | 2.4 - 3.4KW |



FILE: ELECTRICAL WIRING DIAGRAMS 14.38 DATE MODIFIED: 01/10/2024 SCALE:
www.louvretec.co.nz www.louvretec.com.au

©Louvretec 2025 – All Rights Reserved. Technical specifications subject to change without notice.

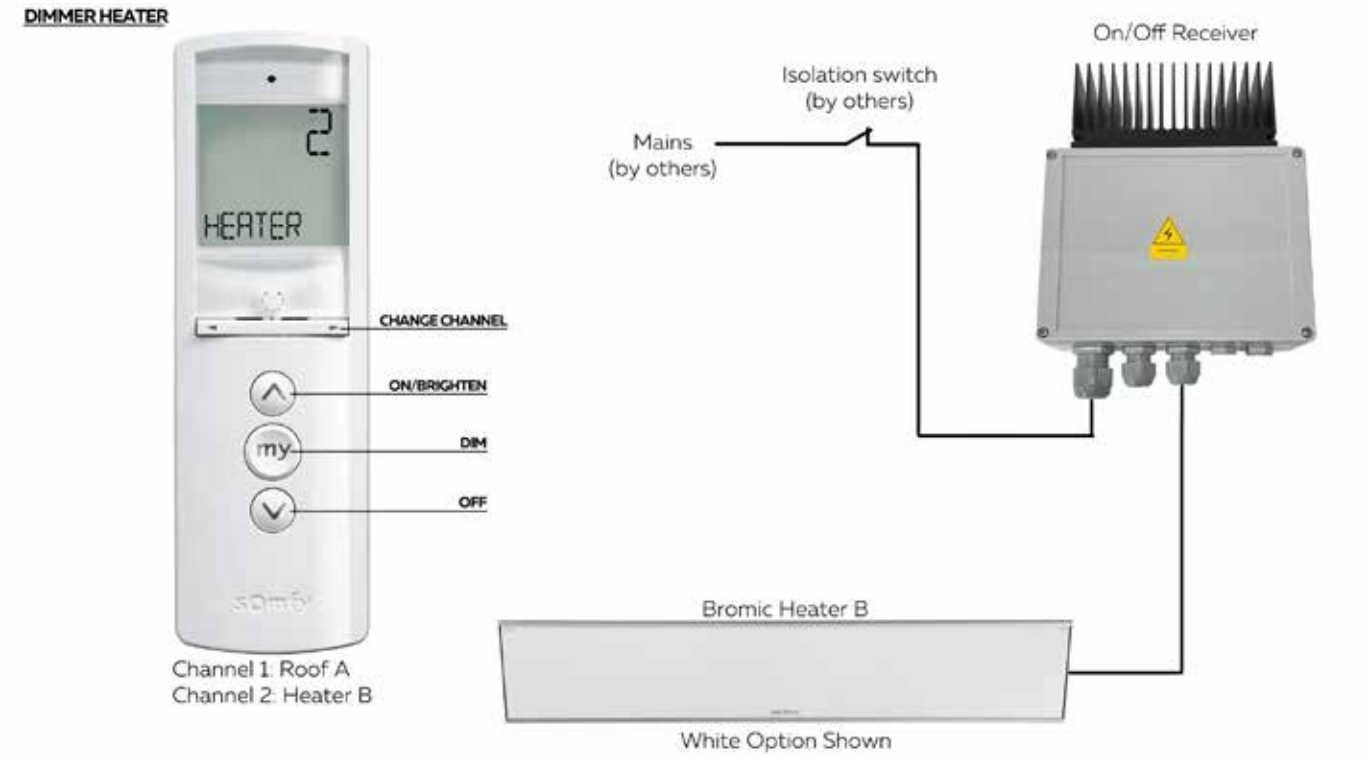


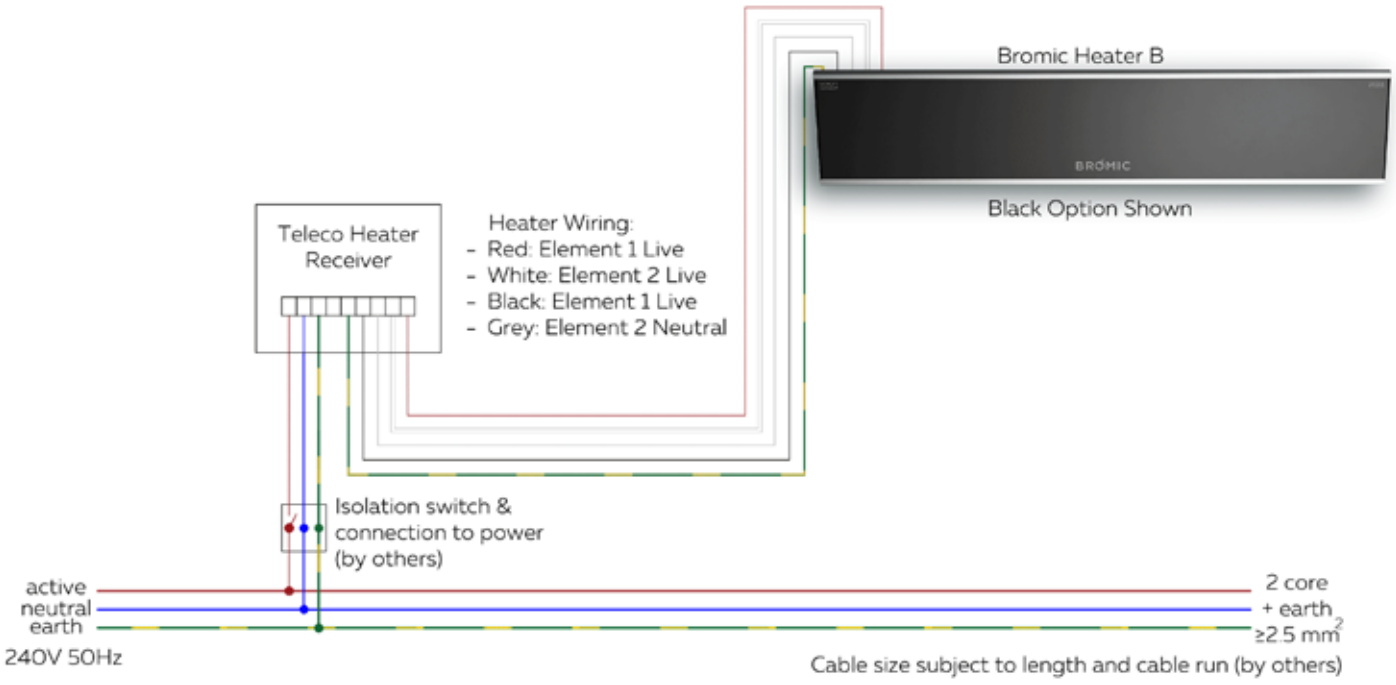


Cable protection (physical & UV) by others




| | |
|---|---|
| Cable Required | 3 core double insulated heavy duty flex<br>3 x ≥2.5mm |
| Voltage | 230–240V/50Hz |
| Rated Current | 19 Amps |
| Current Comsumption | 4.5KW |


©Louvretec 2025 – All Rights Reserved. Technical specifications subject to change without notice.

## WIRING DETAIL : MULTIPLE DIMMABLE BROMIC HEATERS WITH SOMFY REMOTE

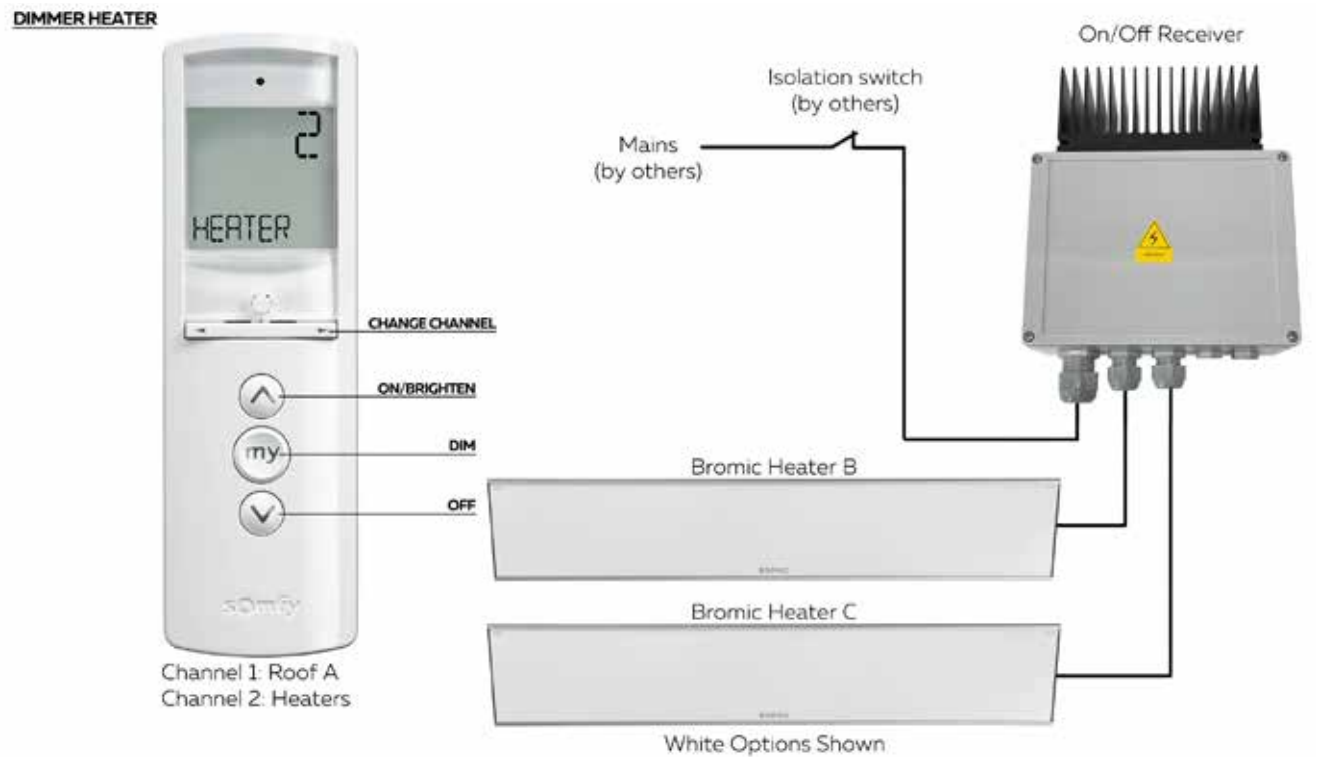


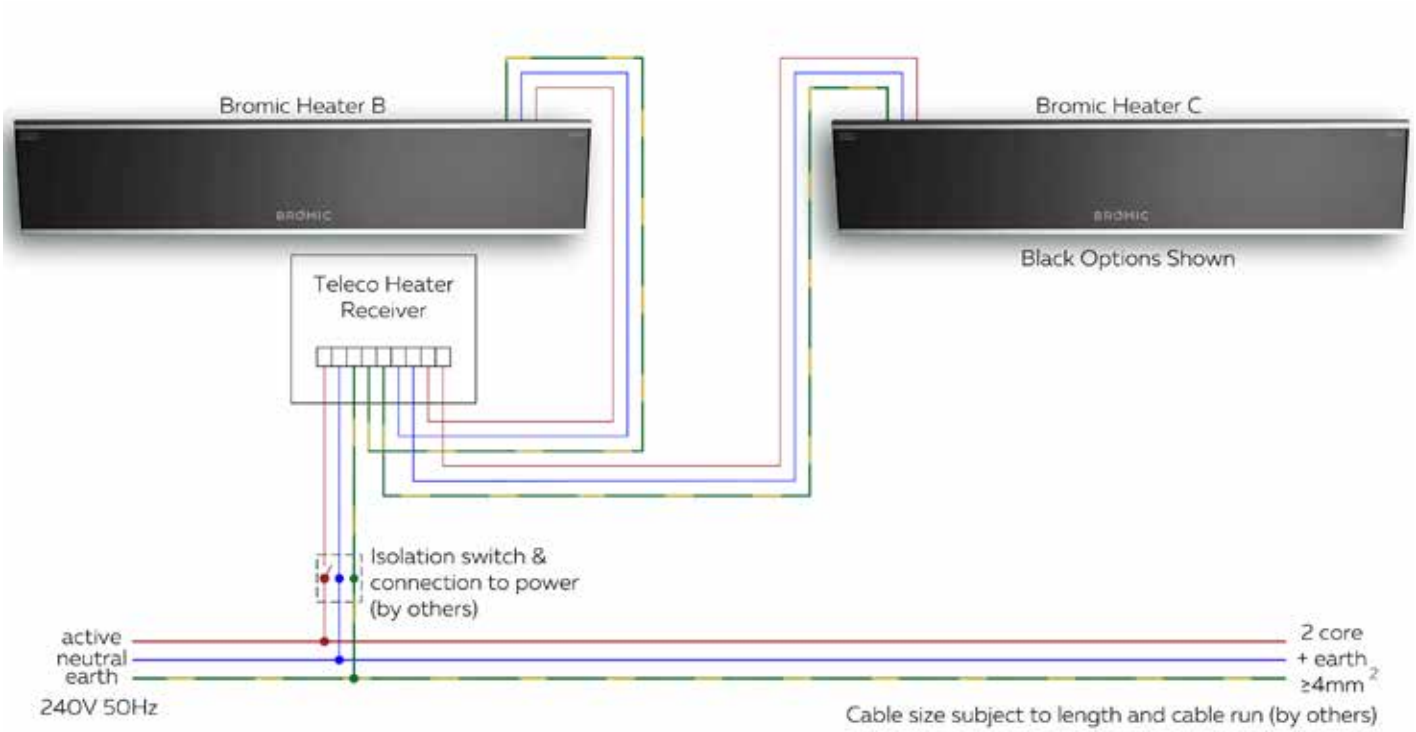


Cable protection (physical & UV) by others



Blue = Neutral
Brown = Live
Yellow/Green = Earth

| | |
|---|---|
| Cable Required | 3 core double insulated heavy duty flex<br>3 x ≥4mm supply & 3 x 2.5mm to heaters |
| Voltage | 230–240V/50Hz |
| Rated Current | 10 - 14.2 Amps per heater |
| Current Comsumption | 2.4 - 3.4KW per heater |



FILE: ELECTRICAL WIRING DIAGRAMS 14.40 DATE MODIFIED: 01/10/2024 SCALE:

www.louvretec.co.nz www.louvretec.com.au

©Louvretec 2025 – All Rights Reserved. Technical specifications subject to change without notice.

TELECO

# RETRACT ROOF CONTROLLERS CONTENTS


| | |
|---|---|
| Single RETRACT ROOF DIAGRAMS & Louvretec Remote | 14.42 |
| Single Retract Roof with Rain Sensor & Louvretec Remote | 14.43 |
| Multiple RETRACT ROOF DIAGRAMS & Louvretec Remote | 14.44 |
| Multiple RETRACT ROOF DIAGRAMS with Rain Sensor & Louvretec Remote | 14.45 |
| Single Retract Roof with RS232 Transmitter & Optional Louvretec Remote | 14.46 |
| Multiple Retract Roof with RS232 Transmitter & Optional Louvretec Remote | 14.47 |
| Multiple RETRACT ROOF DIAGRAMS with Daisy/TMate & Optional Louvretec Remote | 14.48 |
| Single Retract Roof with Gutter Strip Lighting & Louvretec Remote | 14.49 |
| Single Retract Roof with Gutter Strip Lighting, Rain Sensor & Louvretec Remote | 14.50 |
| Multiple Retract Roofs with Gutter Strip Lighting & Louvretec Remote | 14.51 |
| Multiple Retract Roofs with Gutter Strip Lighting, Rain Sensor & Louvretec Remote | 14.52 |


©Louvretec 2025 – All Rights Reserved. Technical specifications subject to change without notice.

## WIRING DETAIL : SINGLE RETRACTABLE ROOF & LOUVRETEC REMOTE

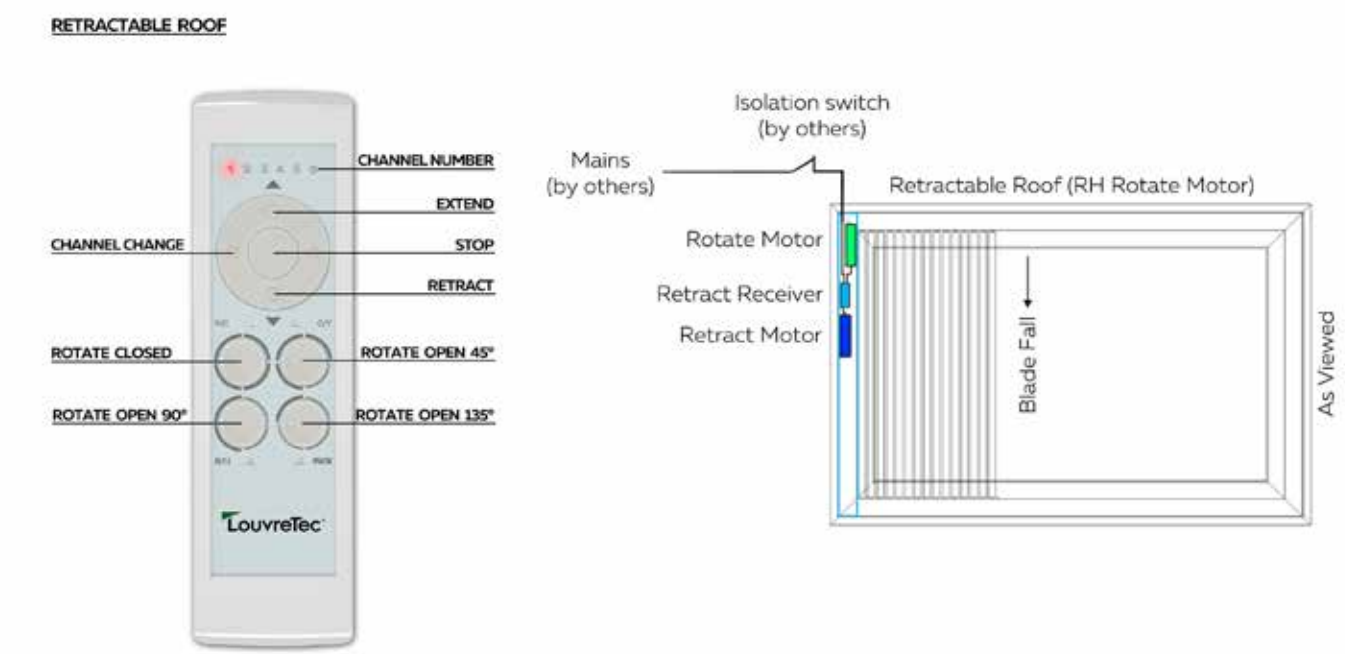


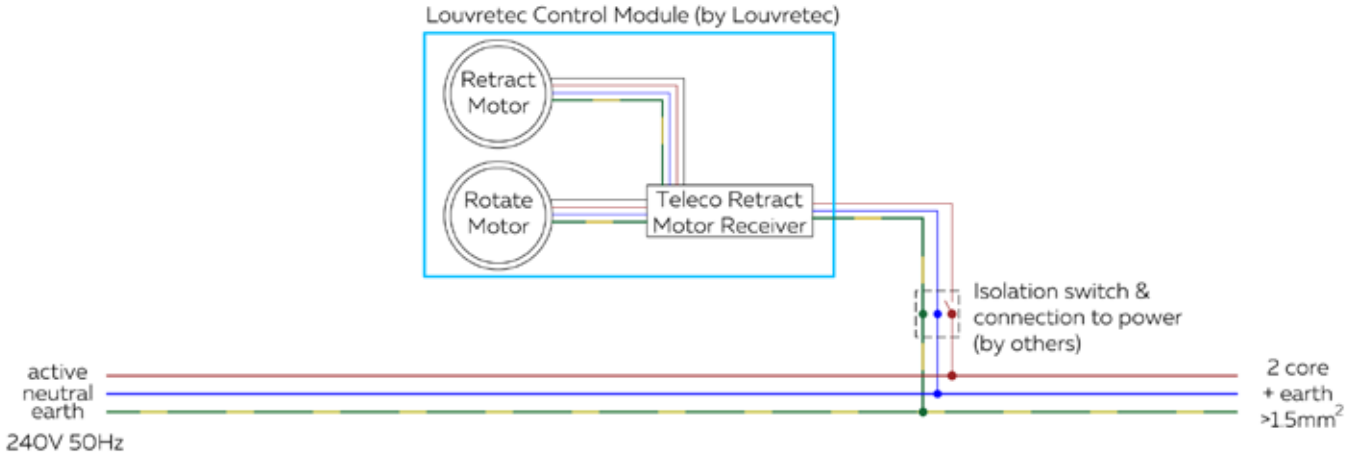


Cable protection (physical & UV) by others



Blue = Neutral
Brown = Live
Yellow/Green = Earth

| | |
|---|---|
| Cable Required | 3 core double insulated heavy duty flex 3 x 1.5mm |
| Voltage | 230 - 240V/50Hz |
| Rated Current | 0.8 Amps |
| Current Consumption | 170 Watts |



FILE: ELECTRICAL WIRING DIAGRAMS 14.42 DATE MODIFIED: 01/10/2024 SCALE:
www.louvretec.co.nz www.louvretec.com.au

©Louvretec 2025 – All Rights Reserved. Technical specifications subject to change without notice.

**RETRACTABLE ROOF**

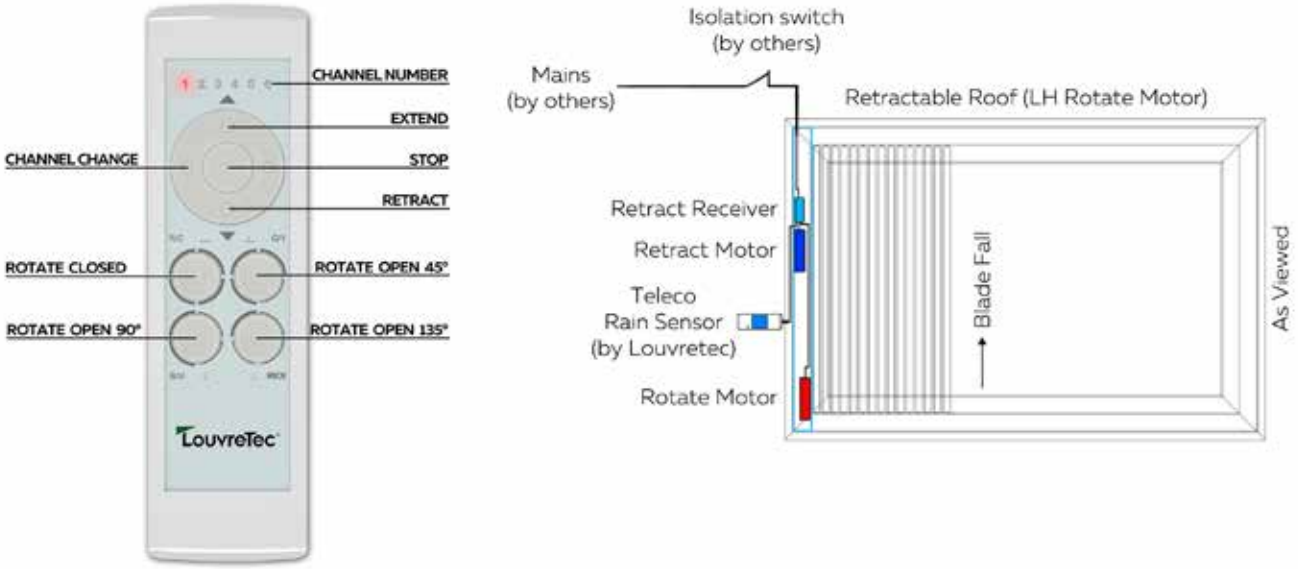


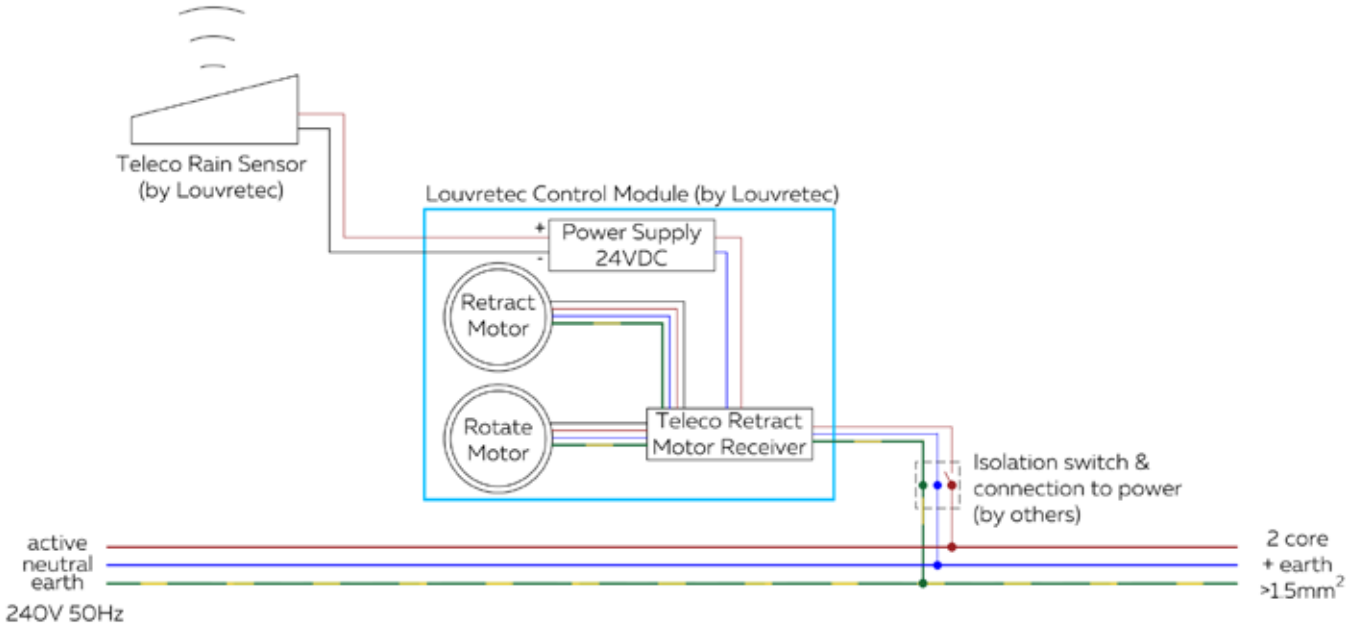


Cable protection (physical & UV) by others



Blue = Neutral
Brown = Live
Yellow/Green = Earth

| | |
|---|---|
| Cable Required | 3 core double insulated heavy duty flex 3 x 1.5mm |
| Voltage | 230 - 240V/50Hz |
| Rated Current | 0.8 Amps |
| Current Consumption | 170 Watts |


©Louvretec 2025 – All Rights Reserved. Technical specifications subject to change without notice.

## WIRING DETAIL : MULTIPLE RETRACTABLE ROOFS & LOUVRETEC REMOTE

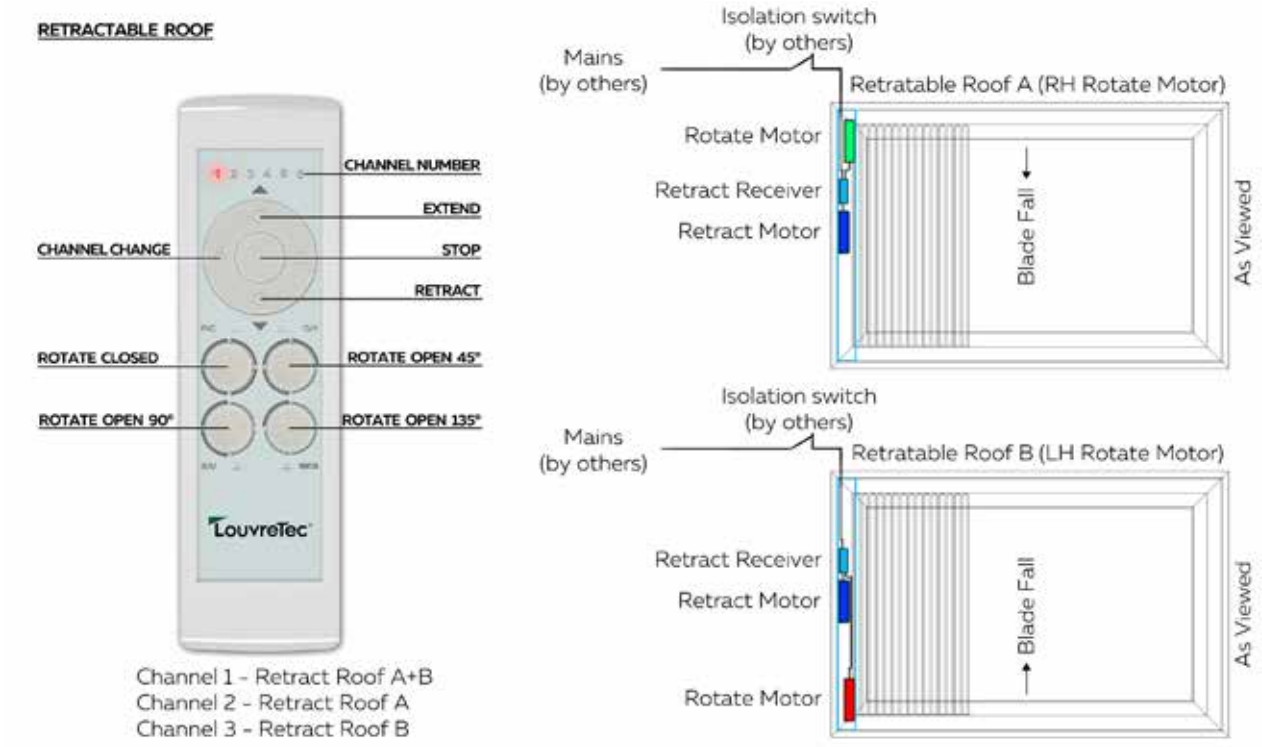


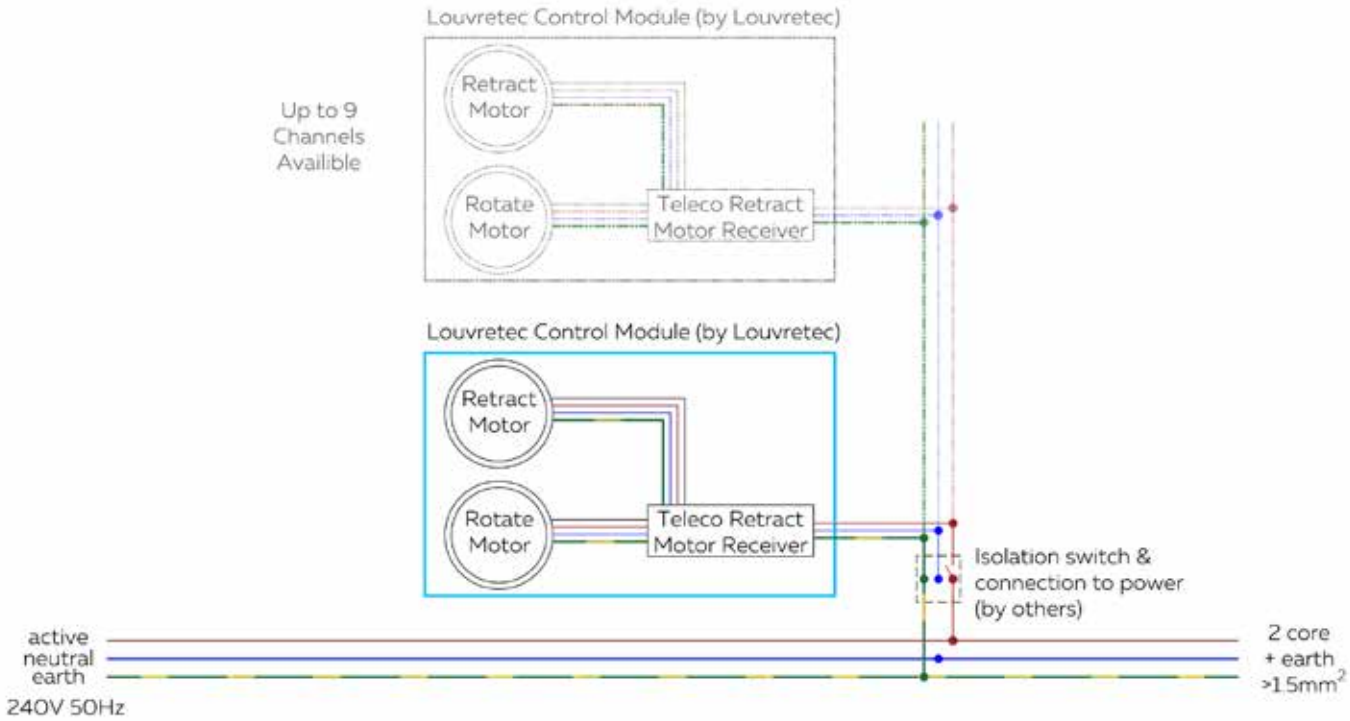





| | |
|---|---|
| Cable Required | 3 core double insulated heavy duty flex 3 x 1.5mm |
| Voltage | 230–240V/50Hz |
| Rated Current | 0.8 Amps per roof |
| Current Comsumption | 170 Watts per roof |





©Louvretec 2025 – All Rights Reserved. Technical specifications subject to change without notice.

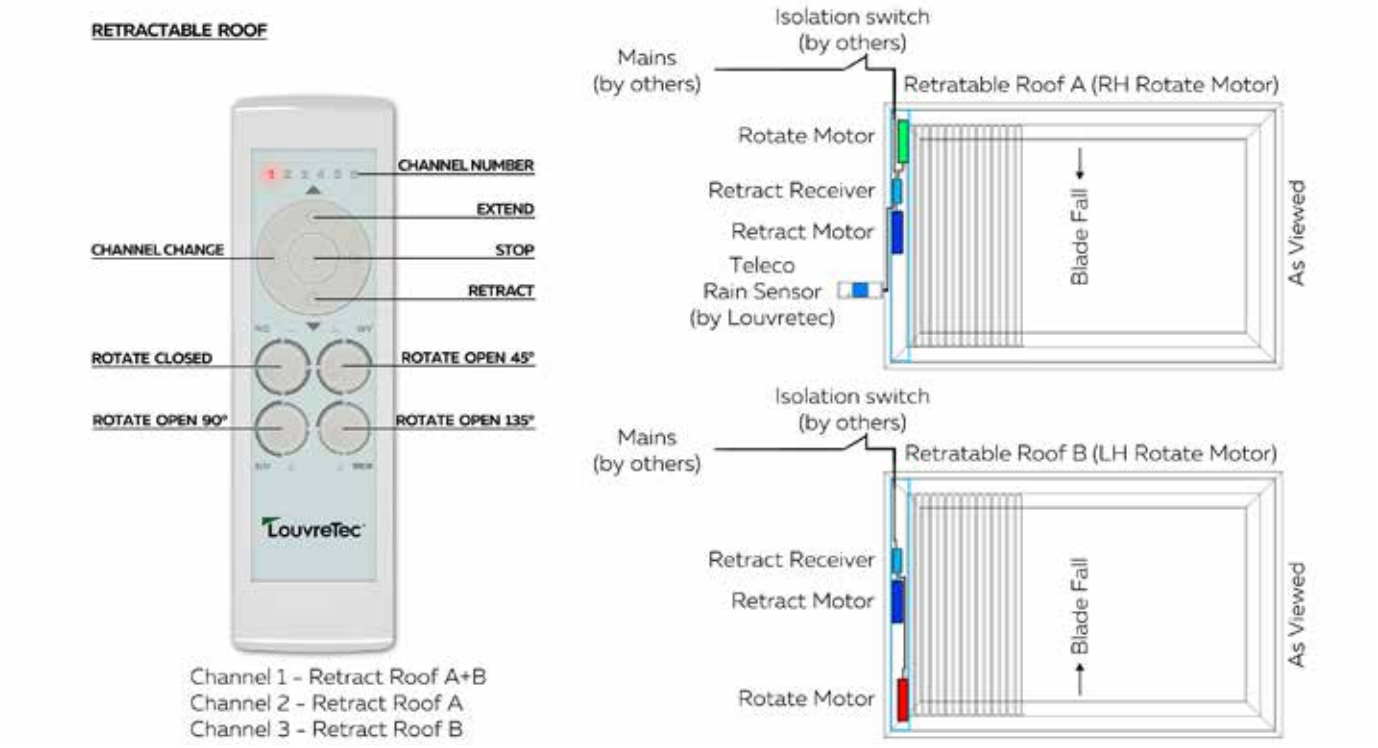


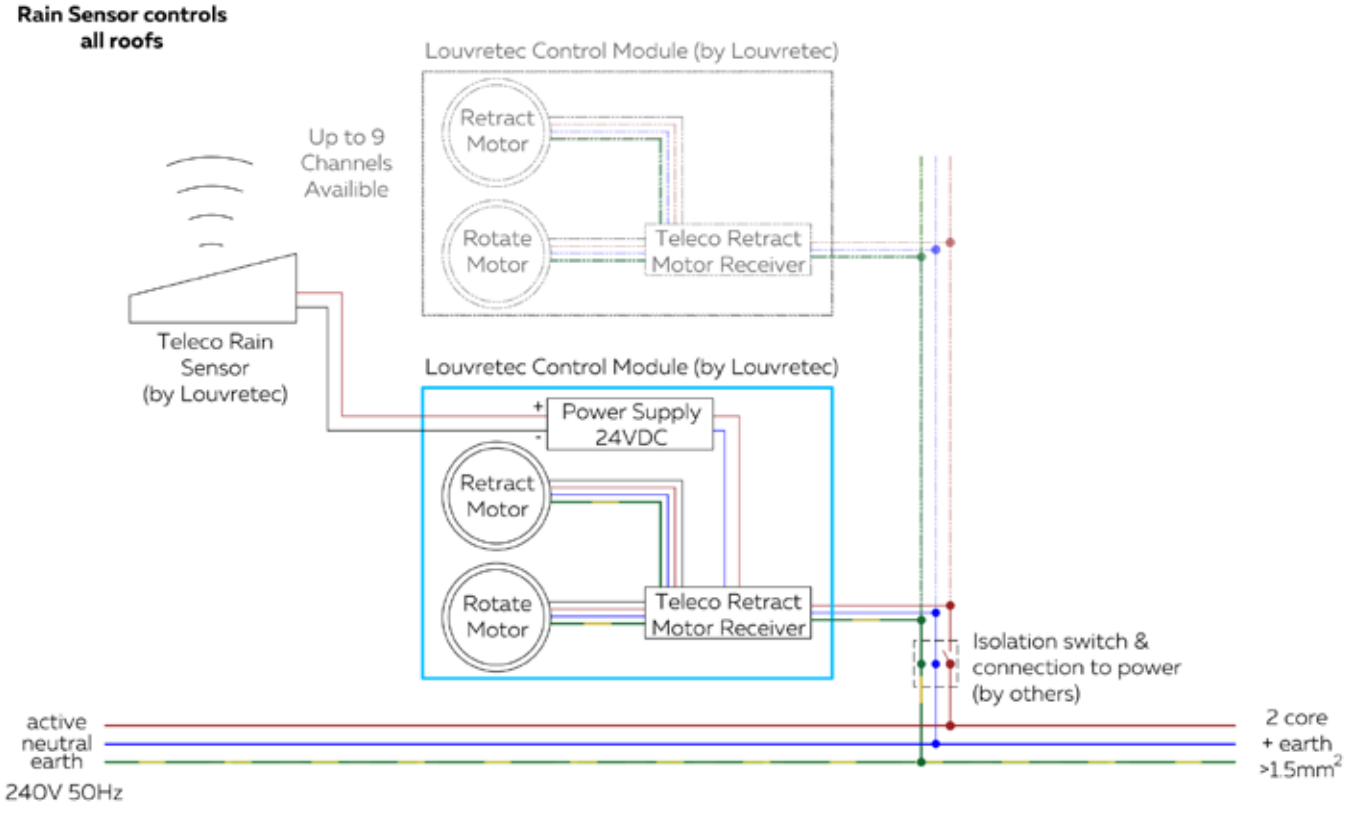


Cable protection (physical & UV) by others




| | |
|---|---|
| Cable Required | 3 core double insulated heavy duty flex 3 x 1.5mm |
| Voltage | 230–240V/50Hz |
| Rated Current | 0.8 Amps per roof |
| Current Consumption | 170 Watts per roof |


©Louvretec 2025 – All Rights Reserved. Technical specifications subject to change without notice.

## WIRING DETAIL : SINGLE RETRACTABLE ROOFS WITH RS232 TRANSMITTER & OPTIONAL LOUVRETEC REMOTE

RS232 Transmitter is supplied by Louvretec
(installed and implemented by others)



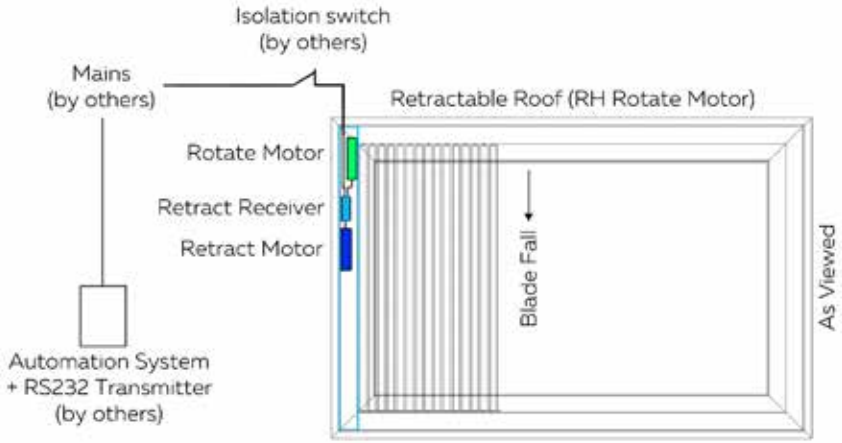


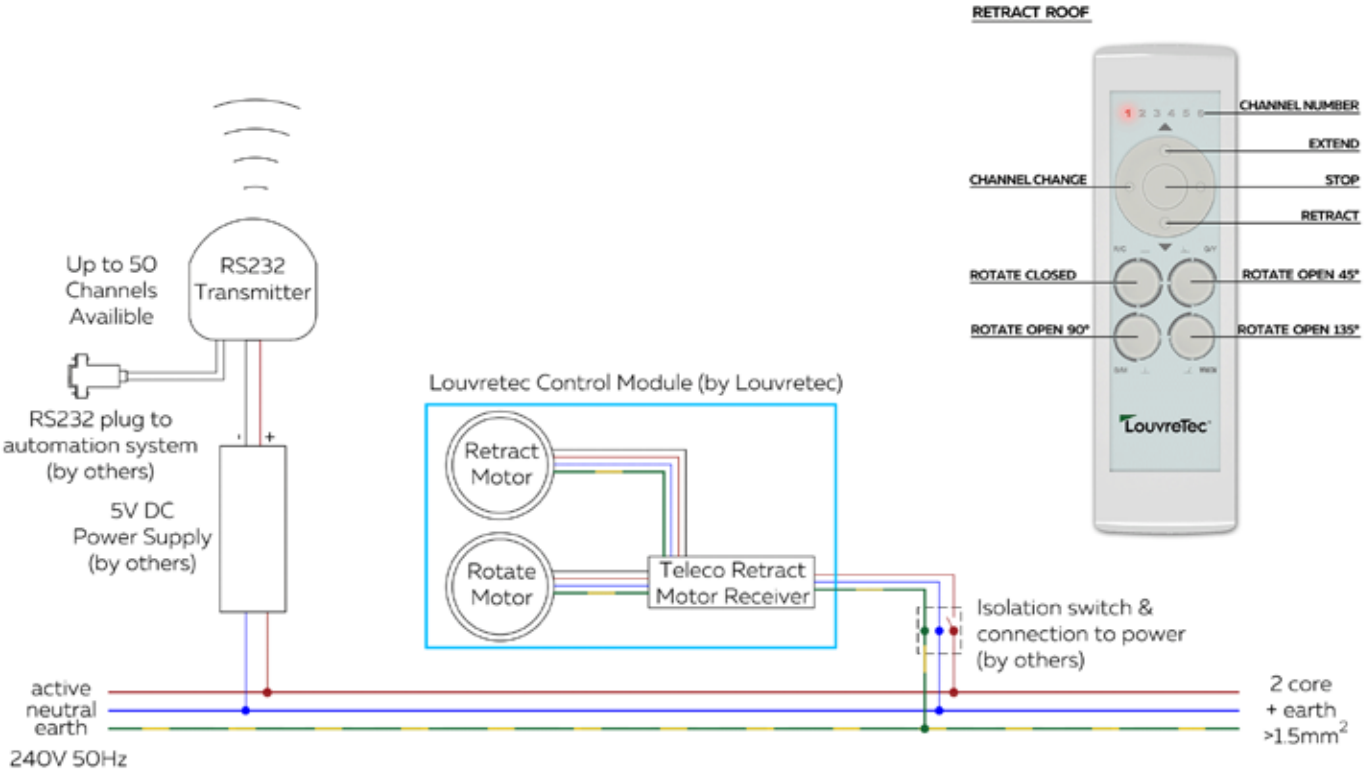


Cable protection (physical & UV) by others



Blue = Neutral
Brown = Live
Yellow/Green = Earth

| | |
|---|---|
| Cable Required | 3 core double insulated heavy duty flex 3 x 1.5mm |
| Voltage | 230–240V/50Hz |
| Rated Current | 0.8 Amps per roof |
| Current Comsumption | 170 Watts per roof |



FILE: ELECTRICAL WIRING DIAGRAMS 14.46 DATE MODIFIED: 01/10/2024 SCALE:
www.louvretec.co.nz www.louvretec.com.au

©Louvretec 2025 – All Rights Reserved. Technical specifications subject to change without notice.

RS232 Transmitter is supplied by Louvretec
(installed and implemented by others)



Channel 1 - Retract Roof A+B
Channel 2 - Retract Roof A
Channel 3 - Retract Roof B

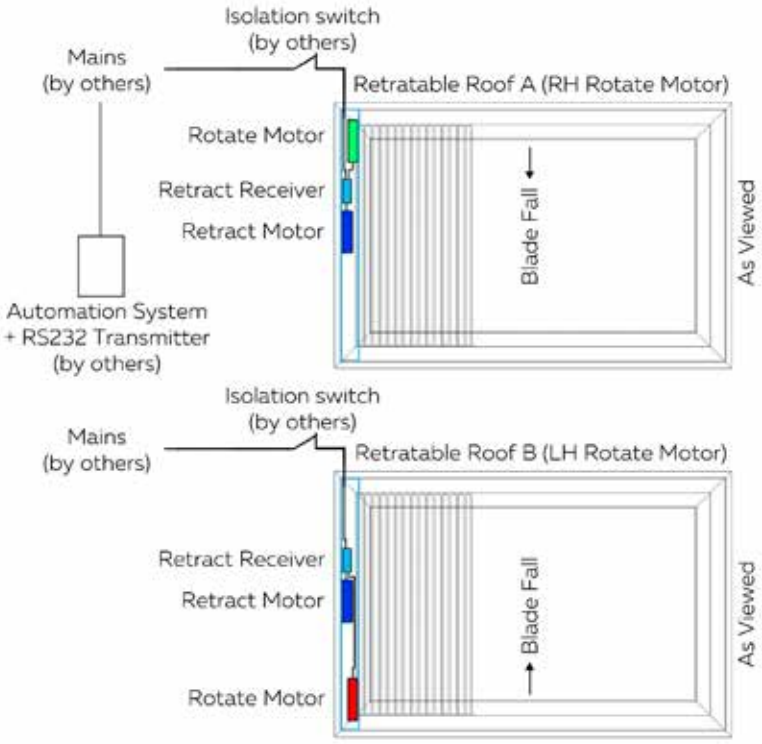


**RS232 Transmitter controls all roofs**

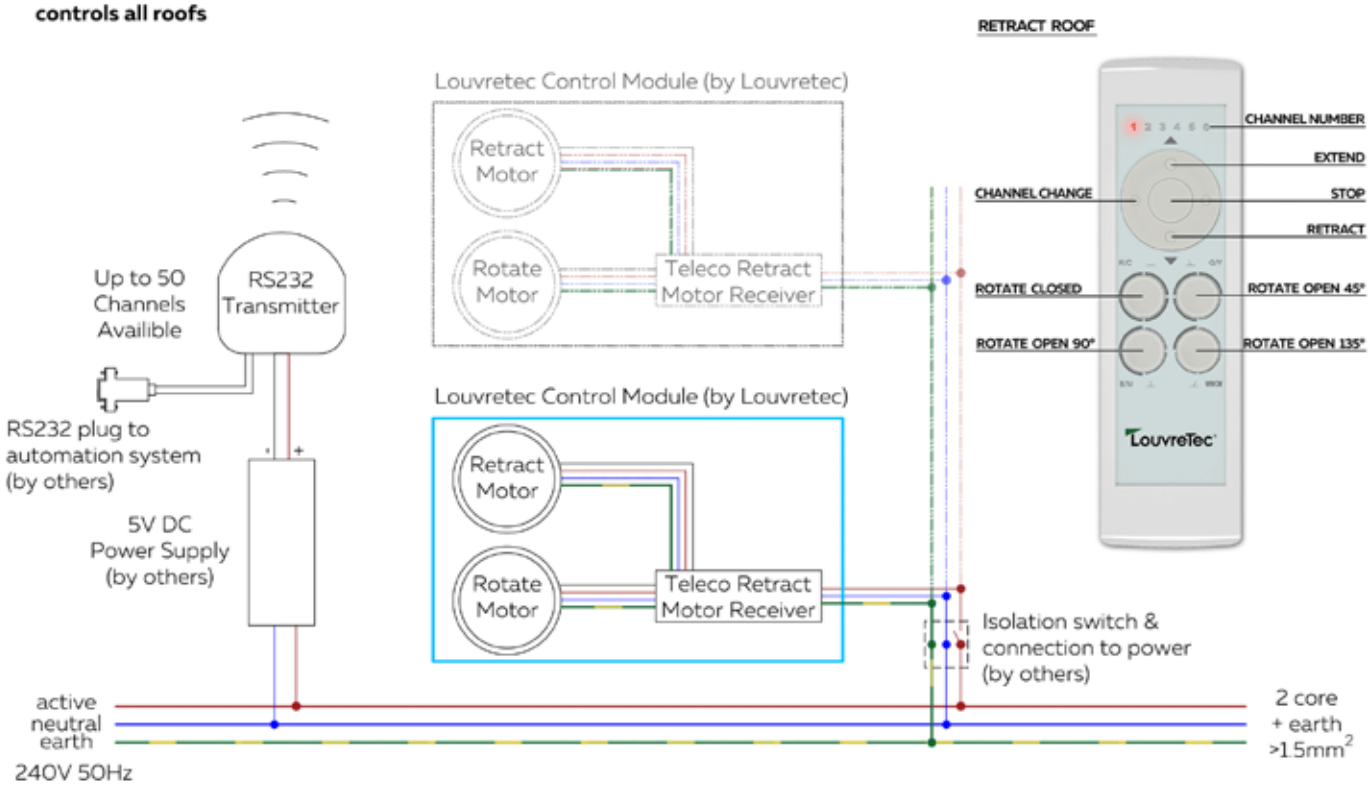


Cable protection (physical & UV) by others



Blue = Neutral
Brown = Live
Yellow/Green = Earth

| | |
|---|---|
| Cable Required | 3 core double insulated heavy duty flex 3 x 1.5mm |
| Voltage | 230–240V/50Hz |
| Rated Current | 0.8 Amps per roof |
| Current Comsumption | 170 Watts per roof |


©Louvretec 2025 – All Rights Reserved. Technical specifications subject to change without notice.

## WIRING DETAIL : MULTIPLE RETRACTABLE ROOFS WITH DAISY/TMATE & OPTIONAL LOUVRETEC REMOTE



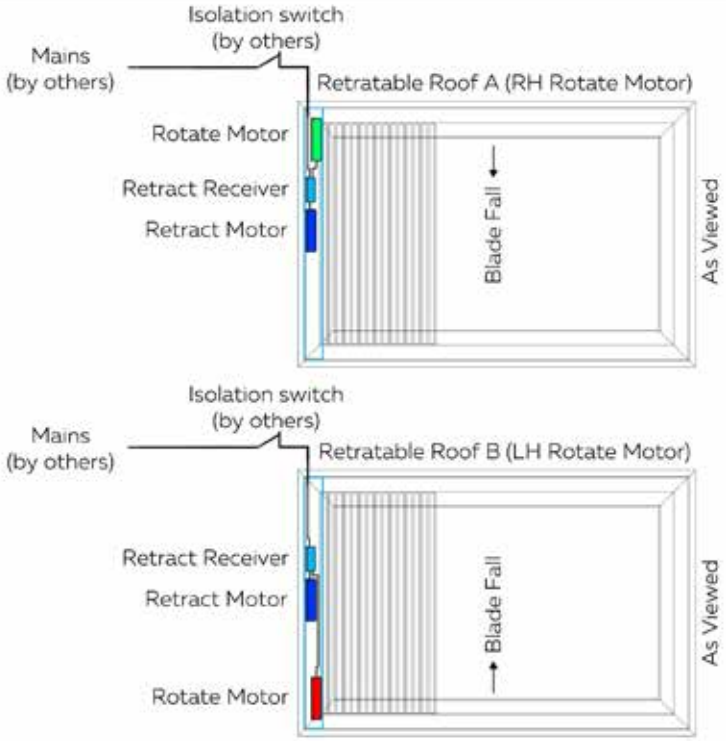


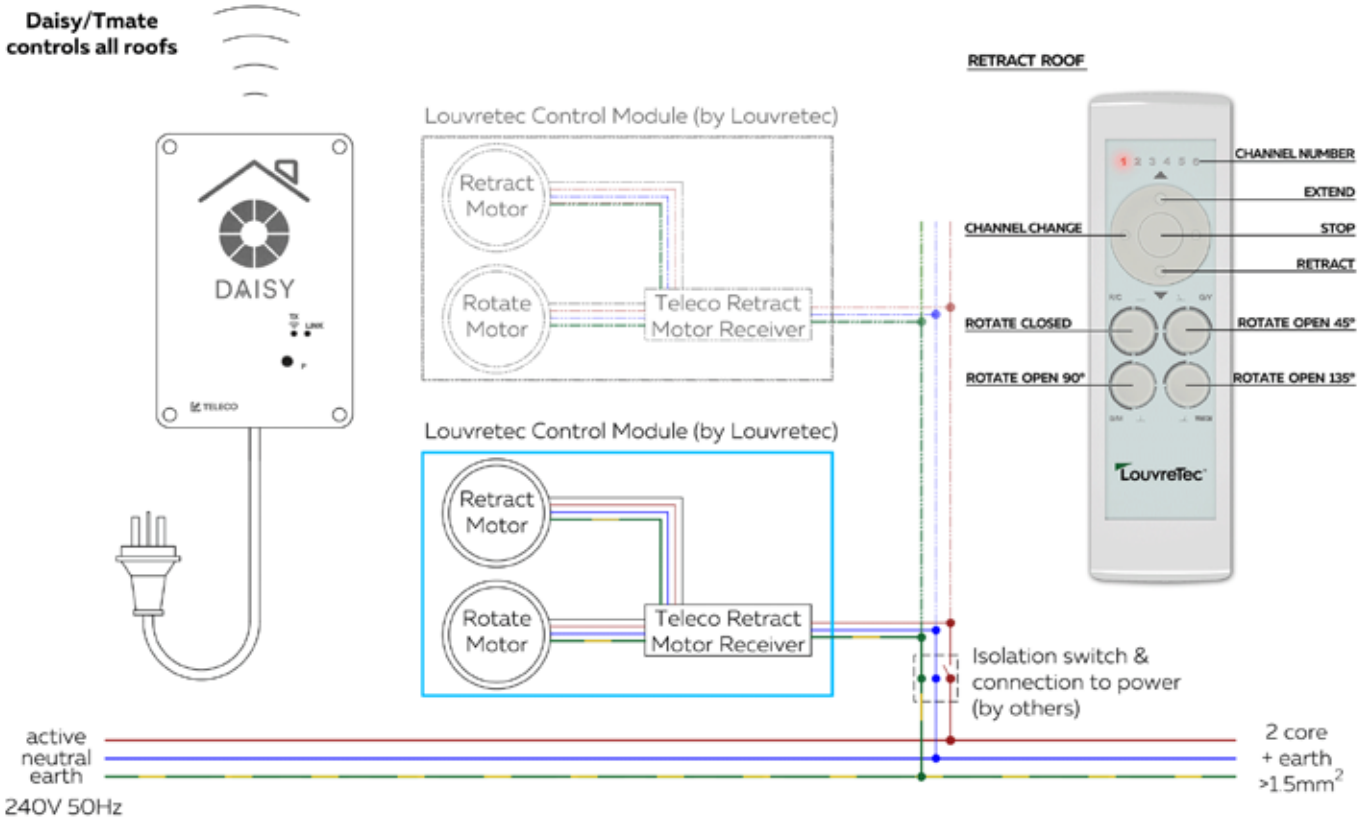





| | |
|---|---|
| Cable Required | 3 core double insulated heavy duty flex 3 x 1.5mm |
| Voltage | 230–240V/50Hz |
| Rated Current | 0.8 Amps per roof |
| Current Comsumption | 170 Watts per roof |



FILE: ELECTRICAL WIRING DIAGRAMS 14.48 DATE MODIFIED: 01/10/2024 SCALE:
www.louvretec.co.nz www.louvretec.com.au

©Louvretec 2025 – All Rights Reserved. Technical specifications subject to change without notice.

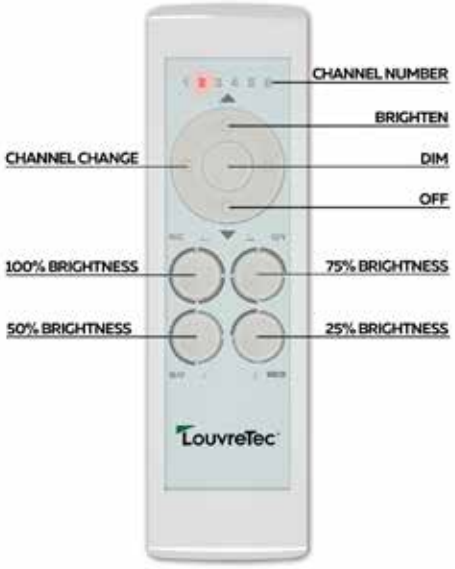


Channel 1 - Retract Roof A
Channel 2 - Lighting B

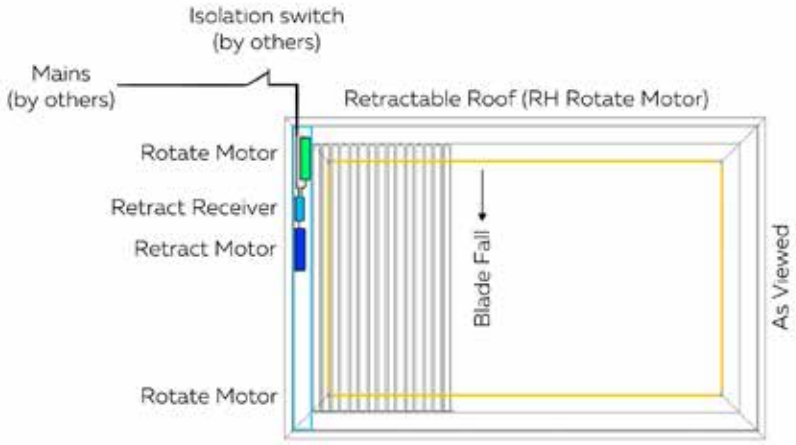


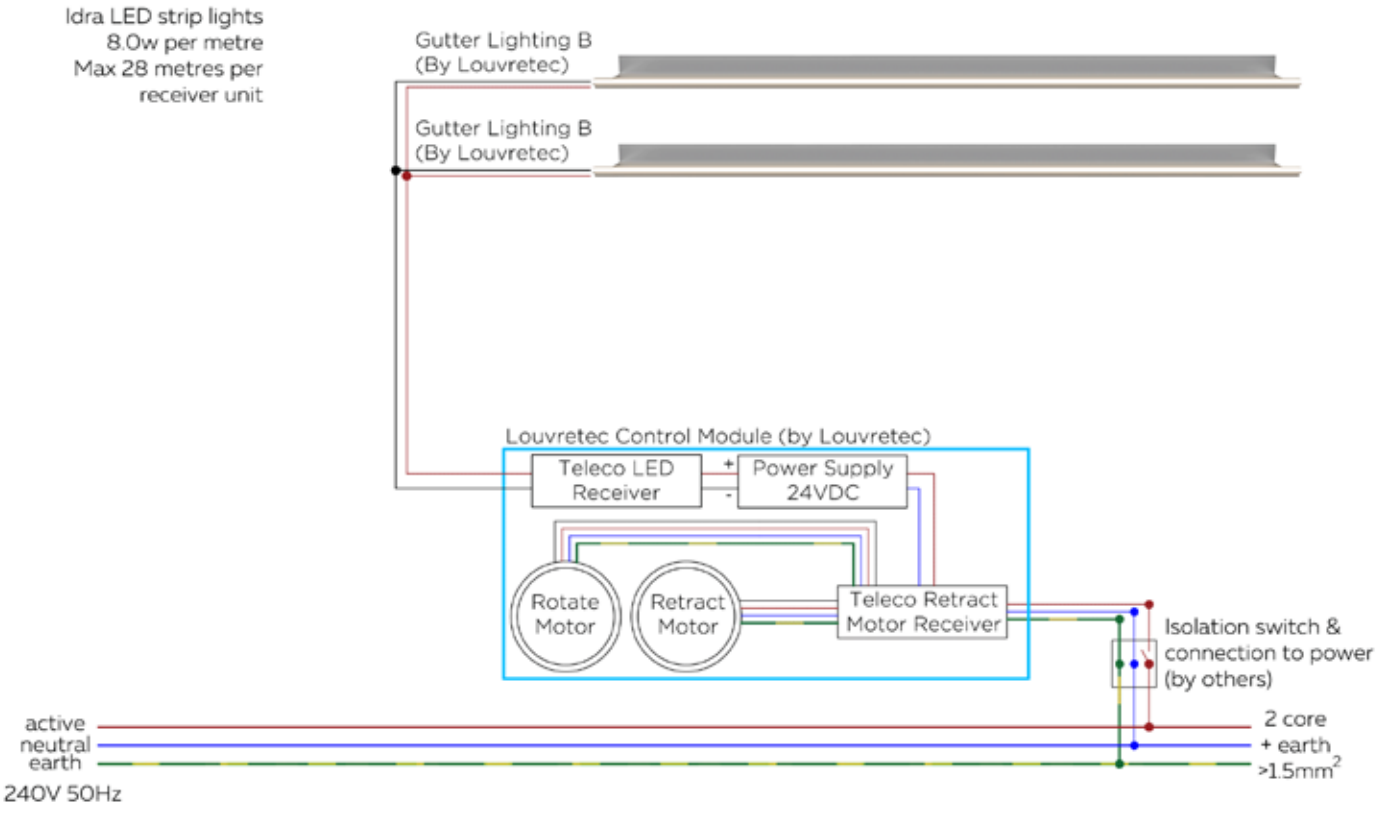


Cable protection (physical & UV) by others



Blue = Neutral
Brown = Live
Yellow/Green = Earth

| | |
|---|---|
| Cable Required | 3 core double insulated heavy duty flex 3 x 1.5mm |
| Voltage | 230 - 240V/50Hz |
| Rated Current | 3.2 Amps per roof |
| Current Consumption | 770 Watts per roof |


©Louvretec 2025 – All Rights Reserved. Technical specifications subject to change without notice.

## WIRING DETAIL : SINGLE RETRACTABLE ROOF WITH LOUVRETEC GUTTER STRIP LIGHTING, RAIN SENSOR & LOUVRETEC REMOTE

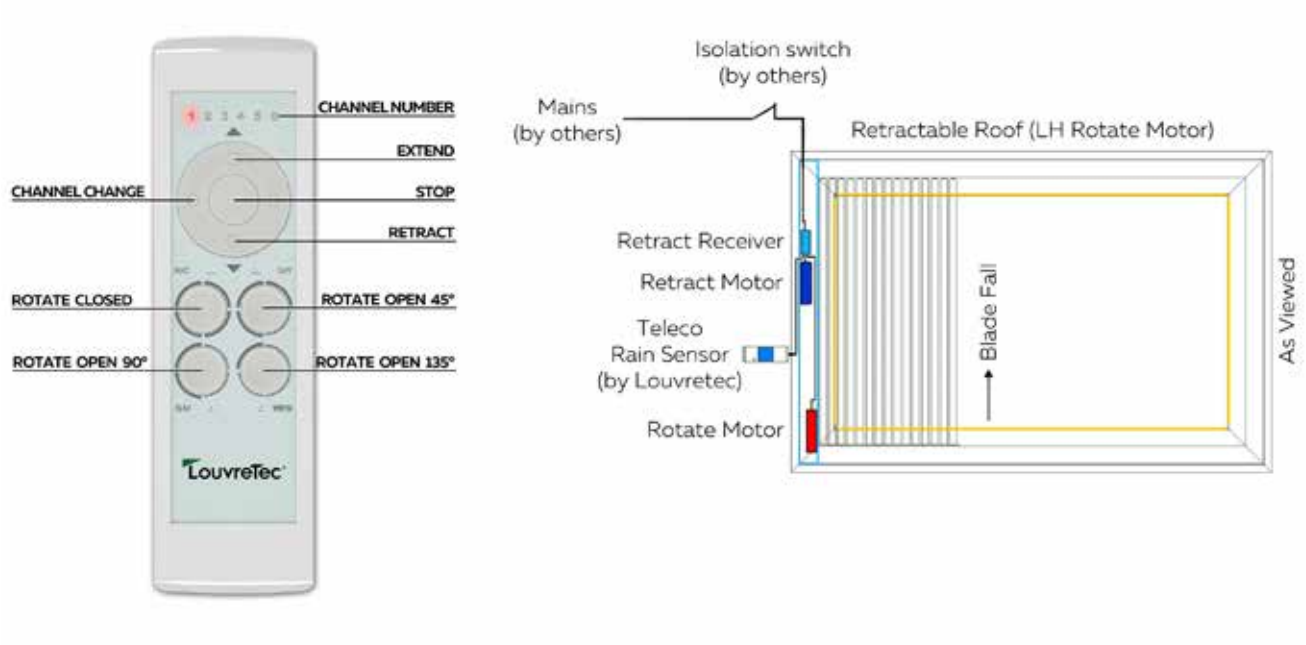


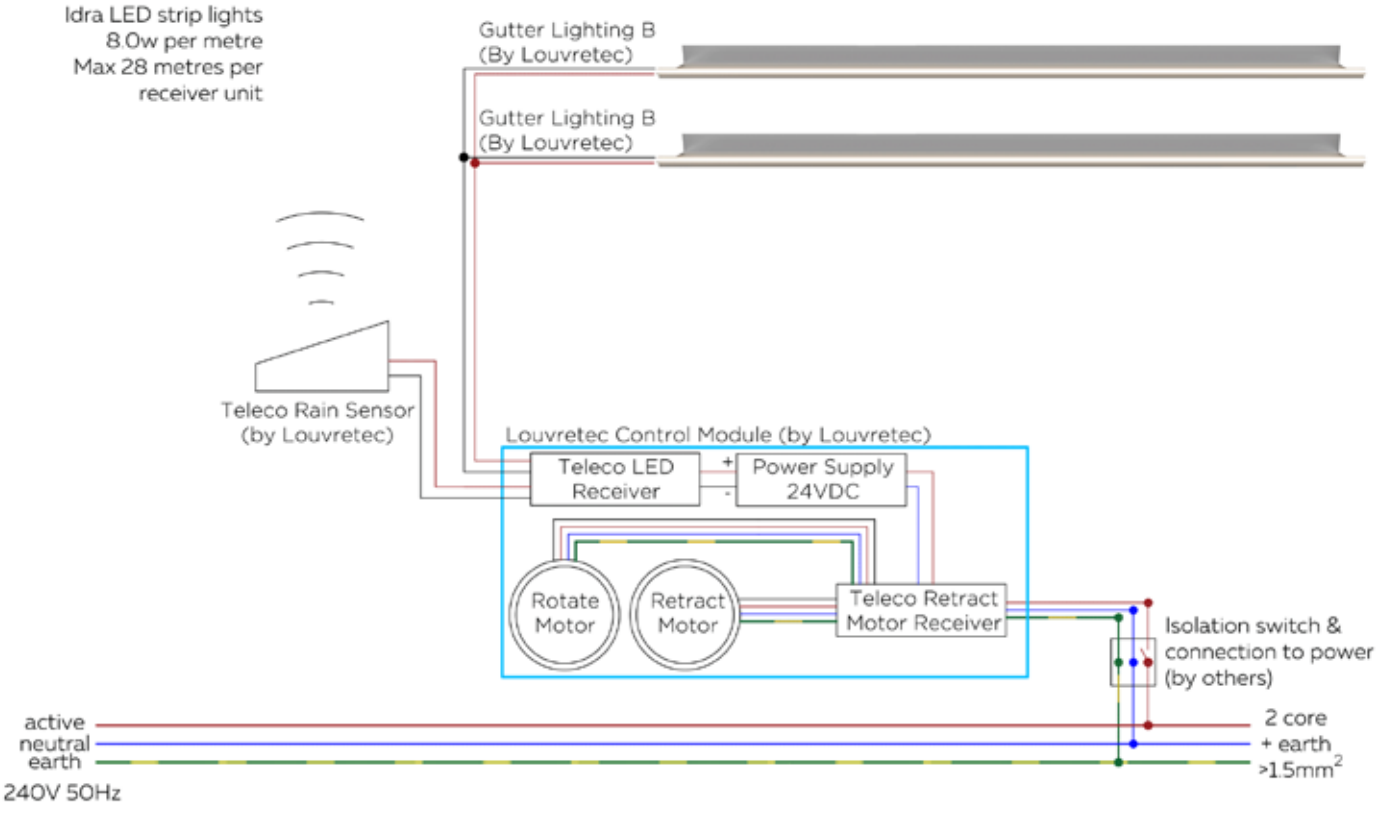


Cable protection (physical & UV) by others



Blue = Neutral
Brown = Live
Yellow/Green = Earth

| | |
|---|---|
| Cable Required | 3 core double insulated heavy duty flex 3 x 1.5mm |
| Voltage | 230 - 240V/50Hz |
| Rated Current | 3.2 Amps per roof |
| Current Consumption | 770 Watts per roof |



FILE: ELECTRICAL WIRING DIAGRAMS 14.50 DATE MODIFIED: 01/10/2024 SCALE:
www.louvretec.co.nz www.louvretec.com.au

©Louvretec 2025 – All Rights Reserved. Technical specifications subject to change without notice.

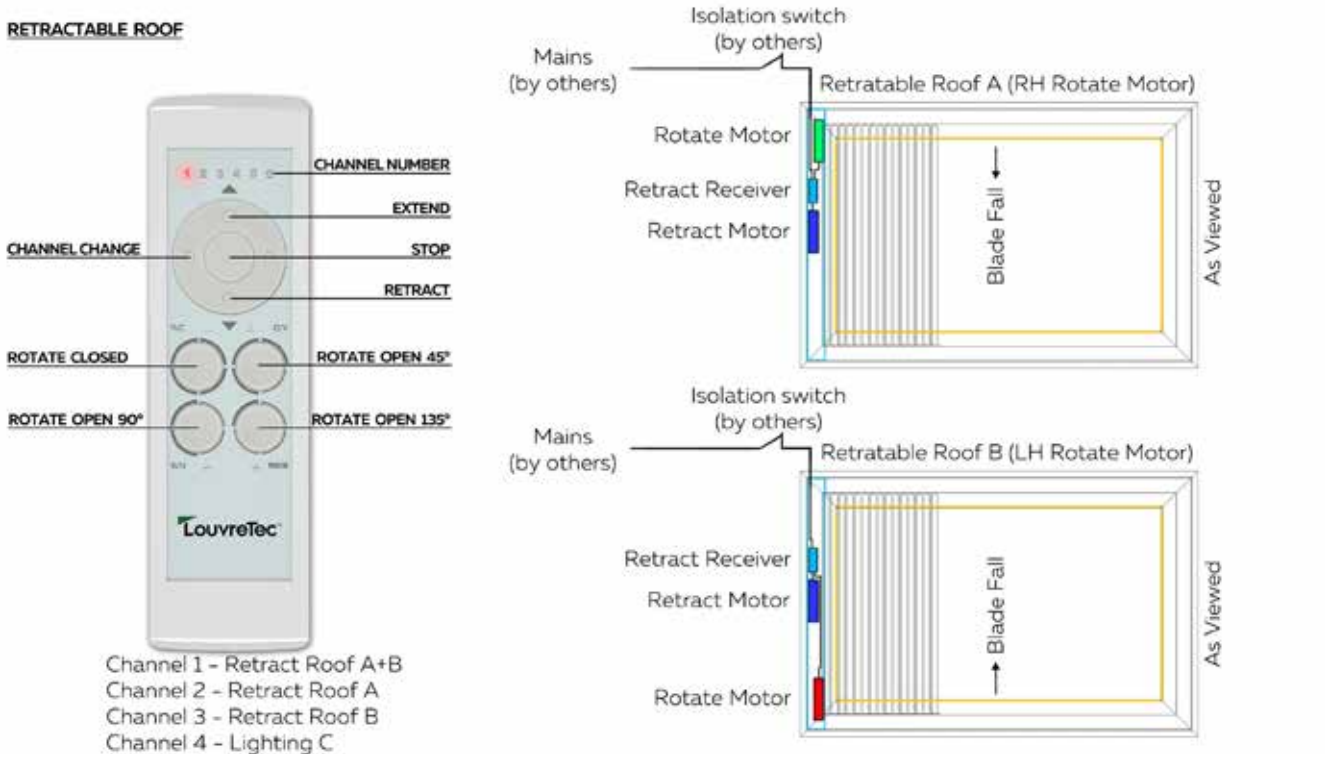


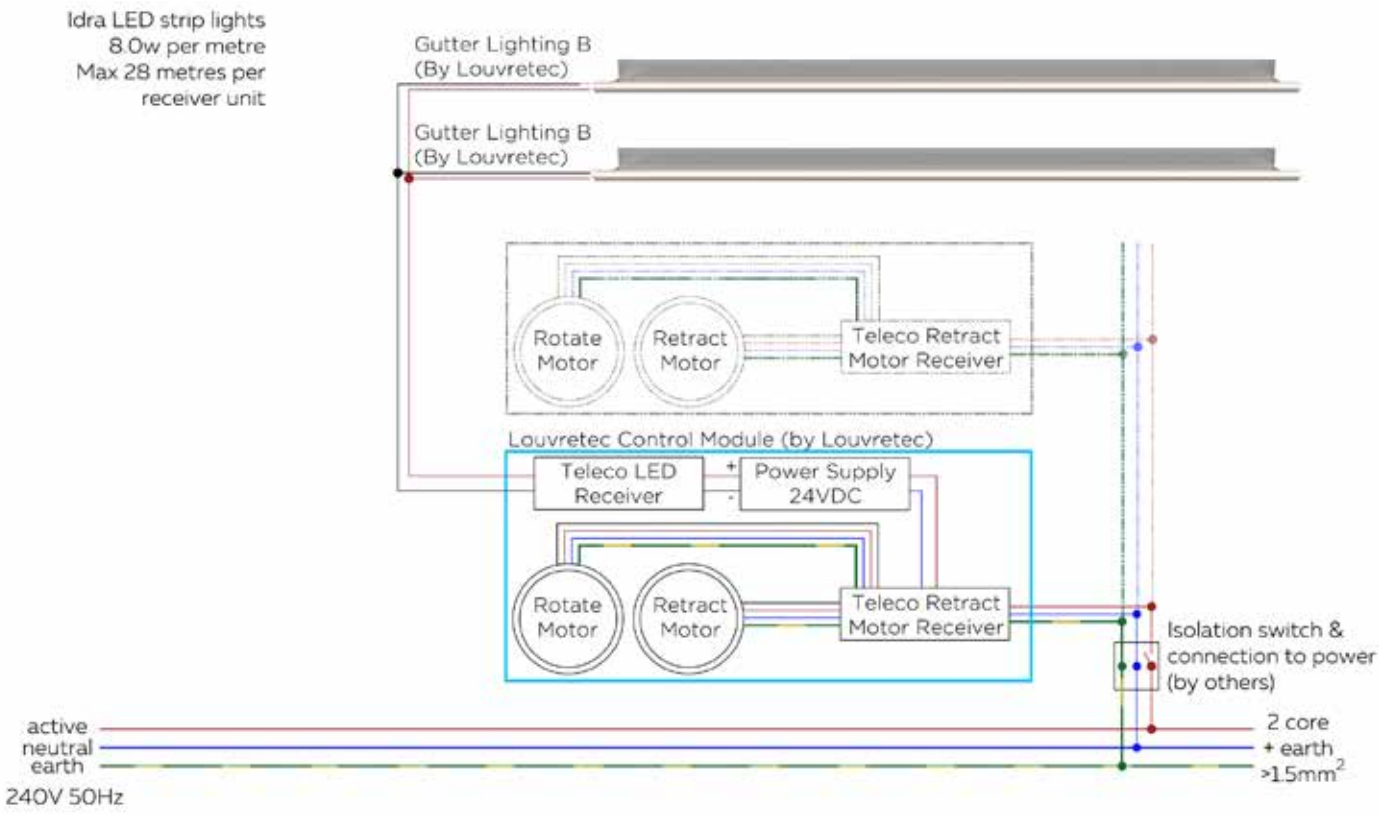


Cable protection (physical & UV) by others



Blue = Neutral
Brown = Live
Yellow/Green = Earth

| | |
|---|---|
| **Cable Required** | 3 core double insulated heavy duty flex 3 x 1.5mm |
| **Voltage** | 230–240V/50Hz |
| **Rated Current** | 2.5 Amps + 0.8 Amps per roof |
| **Current Comsumption** | 570 Watts + 170 Watts per roof |


©Louvretec 2025 – All Rights Reserved. Technical specifications subject to change without notice.

## WIRING DETAIL : MULTIPLE RETRACTABLE ROOFS WITH LOUVRETEC GUTTER STRIP LIGHTING, RAIN SENSOR & LOUVRETEC REMOTE

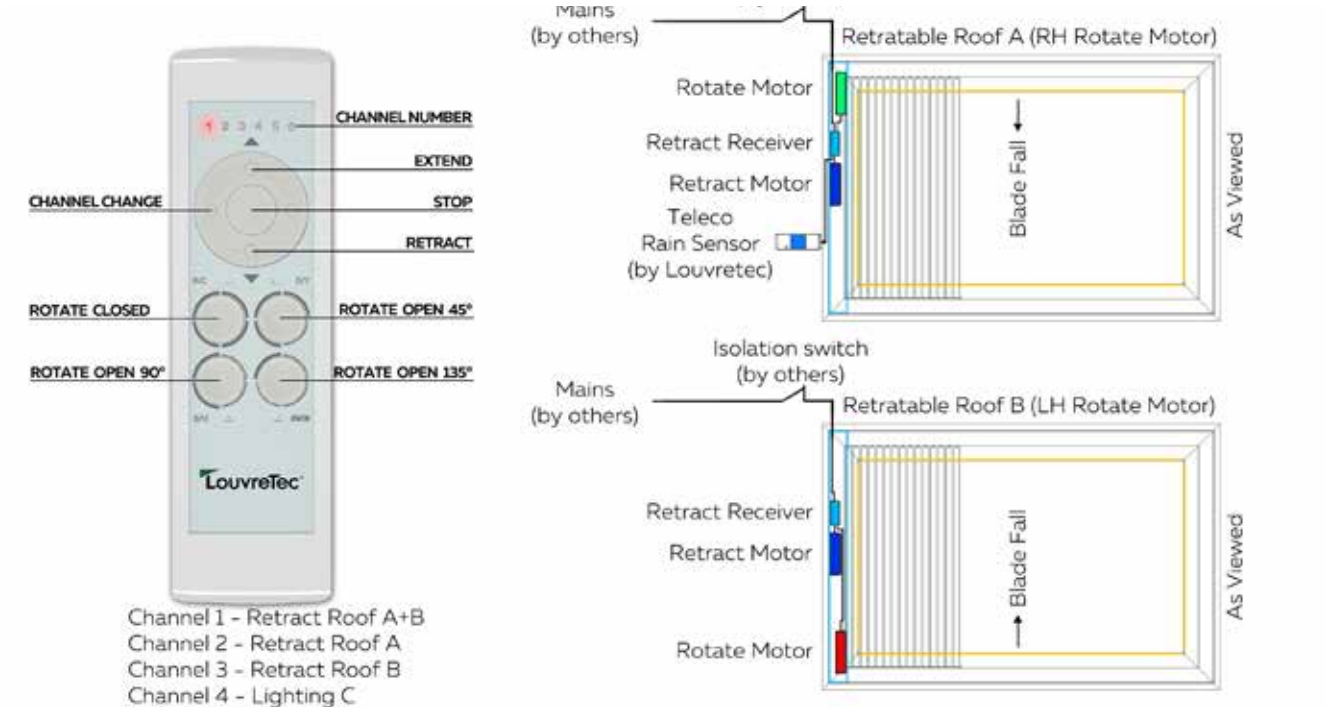


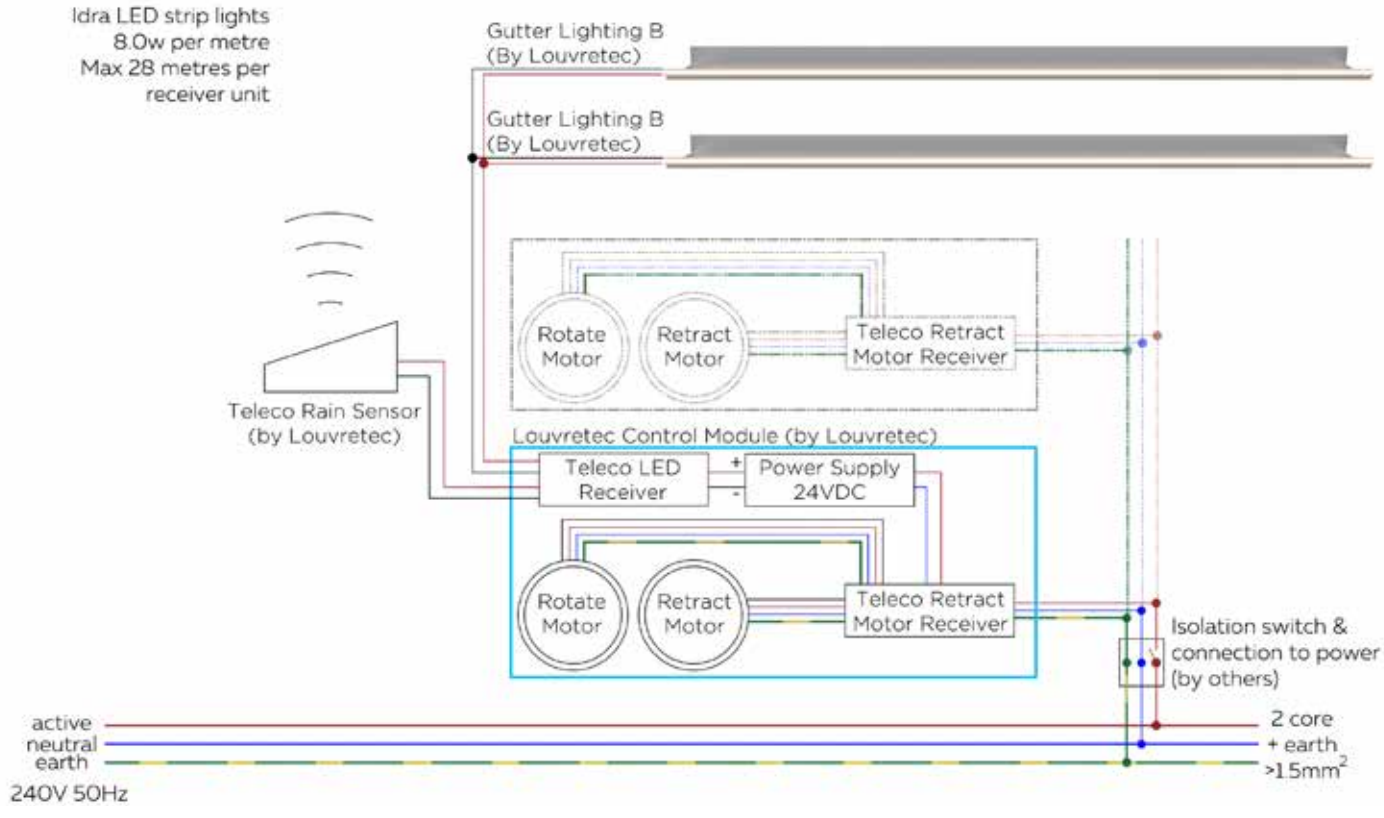





| | |
|---|---|
| Cable Required | 3 core double insulated heavy duty flex 3 x 1.5mm |
| Voltage | 230–240V/50Hz |
| Rated Current | 2.5 Amps + 0.8 Amps per roof |
| Current Comsumption | 570 Watts + 170 Watts per roof |



FILE: ELECTRICAL WIRING DIAGRAMS 14.52 DATE MODIFIED: 01/10/2024 SCALE:
www.louvretec.co.nz www.louvretec.com.au

©Louvretec 2025 – All Rights Reserved. Technical specifications subject to change without notice.

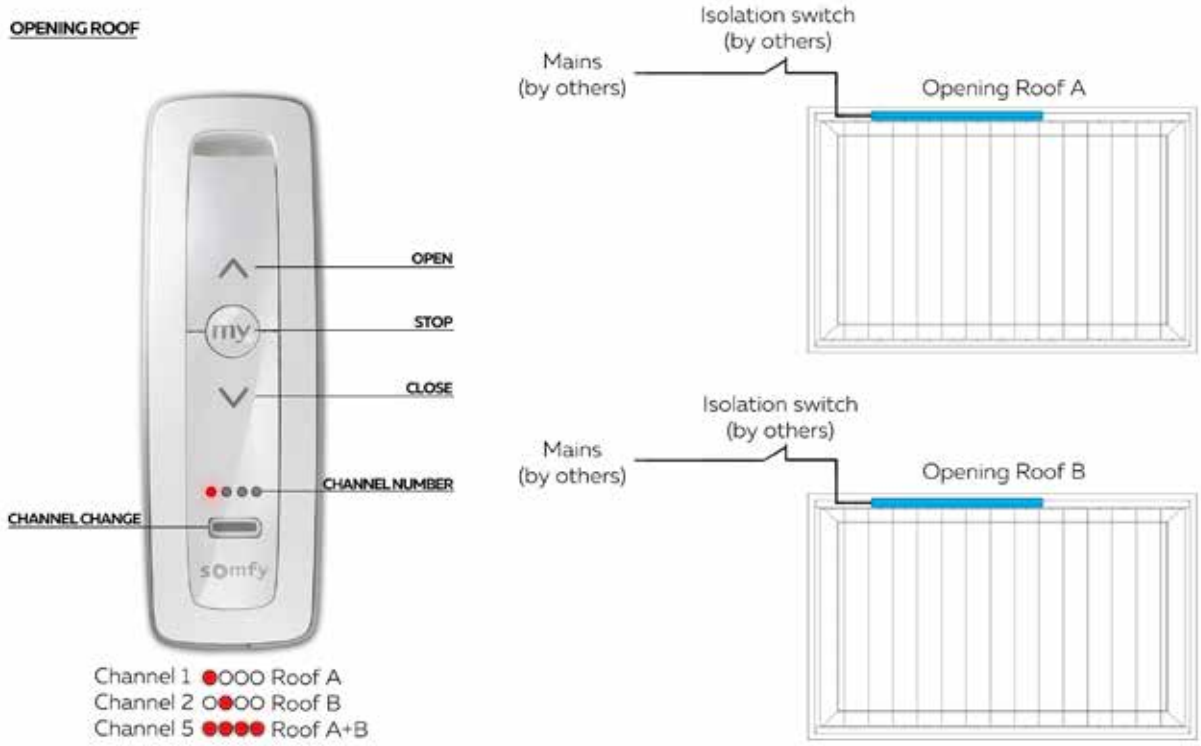


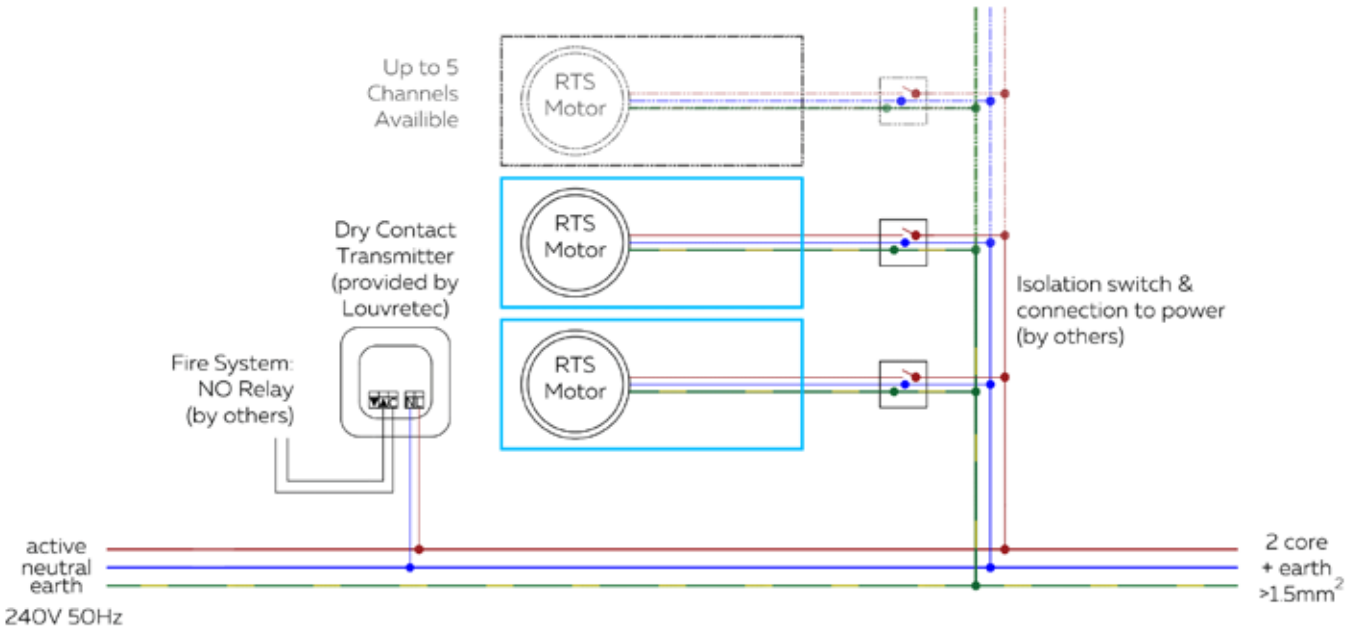


Cable protection (physical & UV) by others



Blue = Neutral
Brown = Live
Yellow/Green = Earth

| | |
|---|---|
| Cable Required | 3 core double insulated heavy duty flex 3 x 1.5mm |
| Voltage | 230–240V/50Hz |
| Rated Current | 0.8 Amps per motor |
| Current Comsumption | 170 Watts per motor |


©Louvretec 2025 – All Rights Reserved. Technical specifications subject to change without notice.

# REMOTE CONTROL INSTRUCTION CARD FOR SITUO 5 REMOTE

**READ ME FIRST**:

- *DETERMINE WHICH STYLE OF REMOTE CONTROL YOU HAVE (see over)*

This Situo 5 Remote Control has the ability to control five Louvretec Products individually or grouped - including;
Motorised Opening Roofs | Sun Louvre Panels | Outdoor Blinds | Heating & Lighting.

Use this instruction card to guide you through each button's function depending on product selected as indicated on the Channel Indicator. It's important to first select the product you wish to operate using the Channel Change Button at the bottom of the remote.

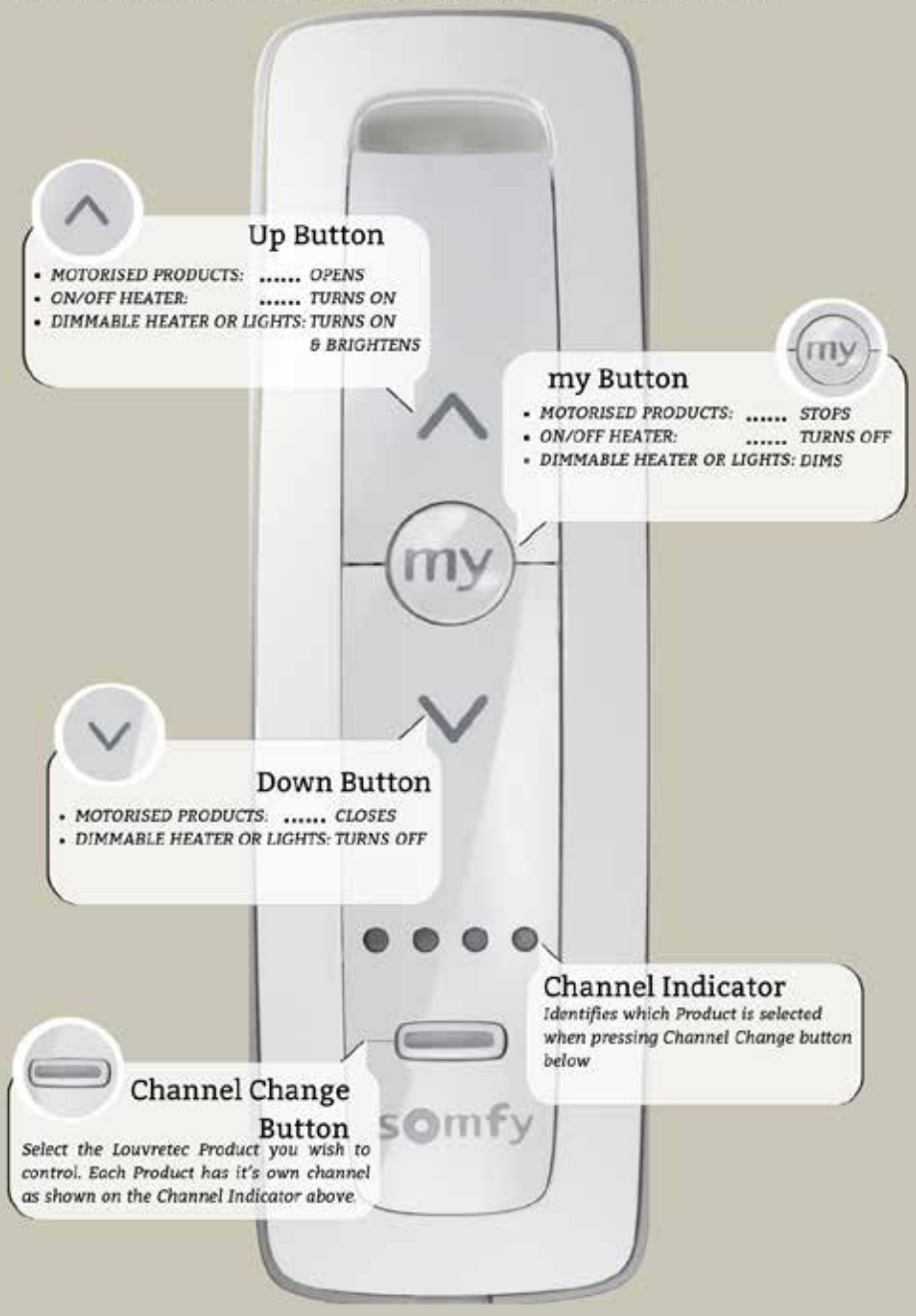




FILE: ELECTRICAL WIRING DIAGRAMS 14.54 DATE MODIFIED: 01/10/2024 SCALE:
www.louvretec.co.nz www.louvretec.com.au

©Louvretec 2025 – All Rights Reserved. Technical specifications subject to change without notice.

# REMOTE CONTROL INSTRUCTION CARD FOR TELIS 16 REMOTE

**READ ME FIRST:**

- *DETERMINE WHICH STYLE OF REMOTE CONTROL YOU HAVE (see over)*

This Telis 16 Remote Control has the ability to control 16 Louvretec Products individually or grouped - including;
Motorised Opening Roofs | Sun Louvre Panels | Outdoor Blinds | Heating & Lighting.

Use this instruction card to guide you through each button's function depending on product selected as indicated on the Channel Indicator. It's important to first select the product you wish to operate using the Channel Change Button at the bottom of the remote.




LouvreTec www.louvretec.com


©Louvretec 2025 – All Rights Reserved. Technical specifications subject to change without notice.

