13. ENGINEERING REPORTS

Engineering References & Design Info	13.04-13.05
Aluminium Beams & Post Structures	13.06
Engineering Specifiers Guide	13.07
Calculation Chart: Opening Roof Spans	13.08
Calculation Chart: Retract Roof Spans	13.09
Calculate Chart: Airfoil Sun Louvre Spans	13.10
Calculation Chart: Rectangular Louvre Spans	13.11 - 13.12
Tributary Length; Beam Calculations	13.13 - 13.14
Beam & Post Structures	13.15 - 13.17
Post Calculations	13.18
Posts & Footings	13.19 - 13.29
Base Plate Sizes	13.30
Snow Loads	13.31 - 13.32

©Louvretec 2025 – All Rights Reserved. Technical specifications subject to change without notice.



©Louvretec 2025 – All Rights Reserved. Technical specifications subject to change without notice.

ENGINEERING REPORTS



Backed by Specialist Engineering

©Louvretec 2025 – All Rights Reserved. Technical specifications subject to change without notice.

ENGINEERING REFERENCES & DESIGN INFORMATION FOR LOUVRETEC SYSTEMS & SUPPORT FRAMES

09 March 2025

The following calculations and design tables apply exclusively to LouvreTec Aluminium Louvre Systems and their supporting structures. Substitutions are not permitted.

Users must ensure they reference the most recent version of the design manual, as the calculations and tables are subject to updates in response to design code changes and amendments at the time of publication.

Maximum spans for aluminium members have been calculated based on wind zones and wind speeds derived from NZS 3604:2011, in alignment with AS/NZS 1170:2021. Ultimate Limit State (ULS) wind speeds are based on a 1-in-500-year return period and are applied at the building, with site exposure multipliers accounted for. Serviceability Limit State (SLS) wind speeds correspond to a 1-in-25-year return period. Associated wind pressures are determined using AS/NZS 1170.2:2021 – Structural Design Actions, Part 2: Wind Actions and are reduced to reflect the classification of louvre frames as Importance Level 1 structures. Section capacities are calculated in accordance with AS/NZS 1664.1:1997 – Aluminium Structures, Part 1: Limit State Design.

Deflection limits are as follows:

- Dead load deflections: Limited to span/250 for both louvres and beams, with an additional cap of 20mm for louvre dead load deflections.
- Wind load deflections: Restricted to span/40 for louvres, span/250 for beams and height/100 for posts.

Wind Zone	**ULS Wind Speed (m/s)**	**(km/h)**
Low	32	115
Medium	37	133
High	44	158
Very High	50	179
Extra High	55	198

The following load case combinations have been applied to the member loads
0.9G,W ULS uplift pressure
1.2G, W ULS downthrust pressure
G, W SLD for deflection

Notes:

1) When the louvre structure is to be attached to an existing building, care must be taken to ensure that supporting structure has adequate strength to carry the additional loads. If there is any doubt contact Louvretec for advice.

©Louvretec 2025 - All Rights Reserved. Technical specifications subject to change without notice.

CODES OF PRACTICE

Design has been carried out using the following codes of practice:

Structural Design Actions:
Part 0: General Principles - AS/NZS 1170.0:2002
Part 1: Permanent, imposed and other actions - AS/NZS 1170.1:2002
Part 2: Wind Actions - AS/NZS 1170.2.2021

Aluminium Structures:
Part 1: Limit state design - AS/NZS 1664.1: 1997

Timber-framed Buildings:
NZS 3604:2011

SPIRAL PIVOT SYSTEM LOAD TEST

Louvretec Products Ltd has conducted a static load test on the Spiral Pivot System. The test confirmed that the Spiral Pivot System is capable of resisting a downward static load greater than would be generated by the application of the structural design loads used in this publication to an equivalent structure. More detailed test information is available from Louvretec upon request.

CATEGORIES, TYPES AND INTENDED PURPOSES OF PRODUCER STATEMENTS

Design	PS1 Producer Statement Design	Used by designers to certify specific design elements comply with specified standards or codes in order to comply with the provisions of the Building Code.
	PS2 Producer Statement Design Review	Used by people undertaking a peer review of all or part of a design to say that the design or the specified part of the design complies with specified standards or codes in order to comply with the provisions of the Building Code.
Construction	PS3 Producer Statement Construction	Used by constructors or trades people to certify that the specified building work that they have undertaken complies with the building consent.
	PS4 Producer Statement Construction Review	Used by people undertaking a peer review of specified building work undertaken by constructors or trades people to certify that the building work that has been undertaken complies with the building consent.

©Louvretec 2025 – All Rights Reserved. Technical specifications subject to change without notice.

TYPICAL DETAIL: ALUMINIUM BEAM & POST STRUCTURES

THREE BASIC BEAM DESIGNS

// 1. SIMPLY SUPPORTED

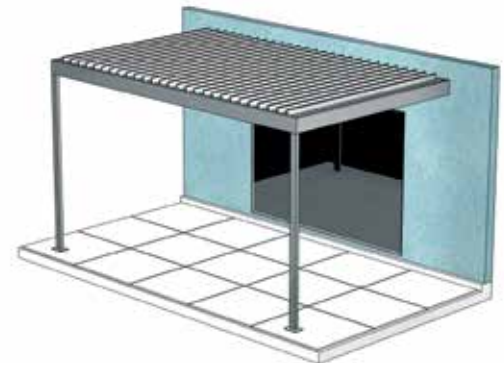

// 2. SINGLE CANTILEVER

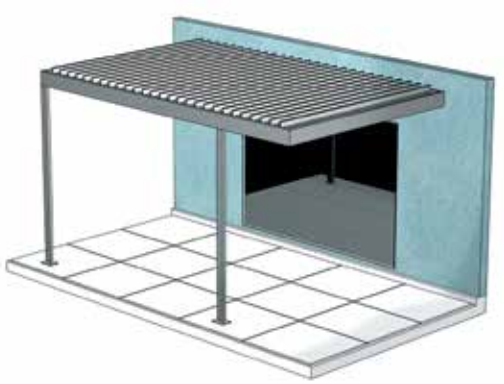

// 3. CONTINUOUS SPAN

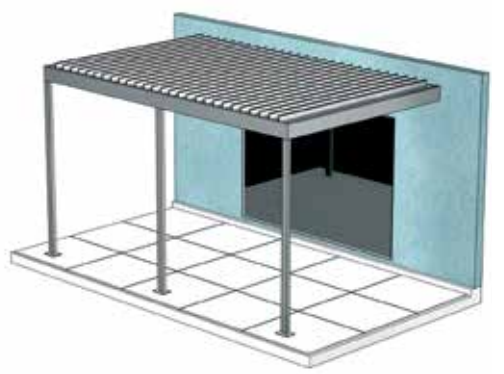

TYPICAL ALUMINIUM BEAM & POST ASSEMBLY

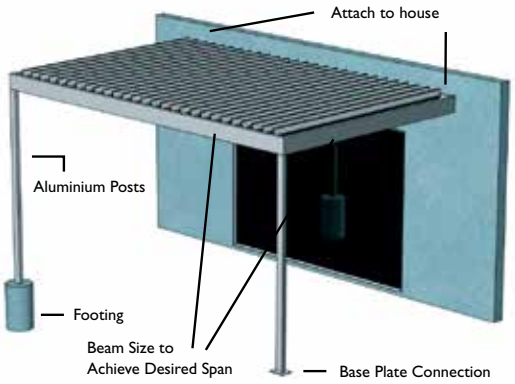

CONFIGURATIONS AVAILABLE

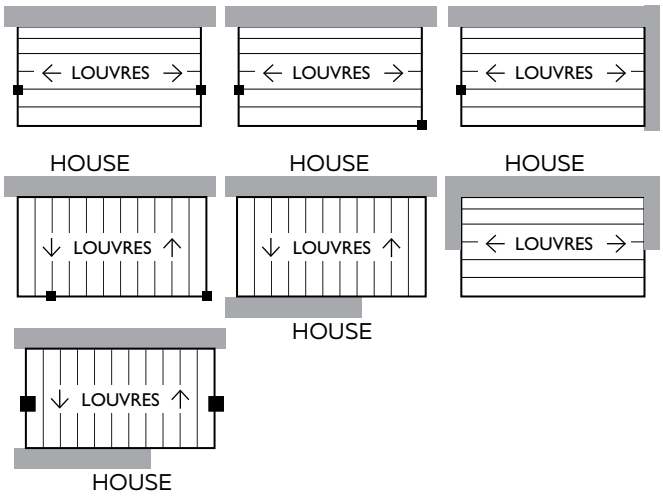

ALUMINIUM BEAMS
150 x 150 x 3*
200 x 50 x 3*
225 x 50 x 3
2/225 x 50 x 3
250 x 50 x 3
2/250 x 50 x 3
300 x 50 x 3
2/300 x 50 x 3

ALUMINIUM POSTS
75 x 75 x 3
100 x 100 x 3
100 x 100 x 5
150 x 150 x 3

* REFER APPENDIX

BEAM TYPES



* REFER APPENDIX

©Louvretec 2025 – All Rights Reserved. Technical specifications subject to change without notice.

BUILDING CONSENT AUTHORITY

OWNER'S NAME .....

DESCRIPTION OF BUILDING WORK .....

SITE ADDRESS .....

LEGAL DESCRIPTION: LOT ..... DP .....

ALL PAGES REFER TO CURRENT LOUVRETEC DESIGN MANUAL SECTION 13 - ENGINEERING REPORTS

STEP 1 WIND ZONE

STEP 2 STRUCTURAL TYPE & DIMENSIONS
PAGE 13.15-13.17

STEP 3 LOUVRE TYPE
PAGES 13.08-13.12

STEP 4 BEAM SIZE
PAGES 13.13-13.17

STEP 5 POST SIZE
PAGES 13.18-13.26

STEP 6 FOOTING SIZE
PAGES 13.27-13.29

WIND ZONE

DETERMINE WIND ZONE FROM NZS 3604: 2011
(SECTION 5) L M H VH EH (Please circle one)
OR PRESSURES FROM DESIGN CODES

STRUCTURAL TYPE & DIMENSIONS

DETERMINE STRUCTURE TYPE EITHER:
1) SIMPLY SUPPORTED (FIG 1 PG 13.15) ☐
2) CANTILEVER (FIG 2 PG 13.15) ☐
3) CONTINUOUS SPAN (FIG 3 PG 13.16) ☐
Please Tick One

DETERMINE REQUIRED DIMENSIONS FROM APPROPRIATE FIGURE
LOUVRE SPAN: _____mm
BEAM SPAN: _____mm

LOUVRE TYPE

CHOOSE LOUVRETEC LOUVRE TYPE FROM MANUAL
LOUVRE TYPE: _____ VERTICAL ☐ HORIZONTAL ☐
Please Tick One

CHECK MAX SPAN FROM TABLES 1-4, PAGES 13.08-13.12

NOT OK, over span (choose alternative louvre type or alter structure to suit)

BEAM SIZE

DETERMINE TRIBUTARY LENGTH FOR BEAM.
DESIGN - REFER APPROPRIATE LOUVRE AND BEAM DESIGN CALCULATIONS. FIG. 1-5 ON PAGES 13.15-17

TRIBUTARY LENGTH: _____mm

NOT OK, over span or over loaded (increase beam size or alter structure to suit)

DETERMINE BEAM SIZE FROM PAGES 13. 13-14

BEAM SIZE: _____mm

POST SIZE

DETERMINE TRIBUTARY AREA (ROOF AREA)
TRIBUTARY EDGE LENGTH AND POST HEIGHT
REFER PAGES 13.19-13.20

TRIB. ROOF AREA: L _x W____= _____m^2
TRIB. EDGE LENGTH: _____mm
POST HEIGHT: _____mm

NOT OK, over height (increase structure to reduce roof area or add extra post)

SPECIFY POST SIZE FROM APPROPRIATE TABLE
FOR SPECIFIED WIND ZONE REFER PAGES 13.22-13.26

POST SIZE: _____

OK

FOOTING SIZE

MEASURE TRIBUTARY AREA LOADING POST.
TRIBUTARY AREA:
REFER APPROPRIATE FIGURE PAGES 13.19-13.20

NOT OK, too large (alter structure to reduce roof area or add extra post)

DETERMINE REQUIRED CONCRETE VOLUME FROM PG 13.27 CHOOSE APPROPRIATE FOOTING SIZE

CONCRETE VOLUME: _____

FOOTING SIZE: _____

©Louvretec 2025 – All Rights Reserved. Technical specifications subject to change without notice.

TABLE 1: CALCULATE OPENING ROOF SPANS

STUDIO89 LTD
CONSULTING ENGINEERS

OVERHEAD ADJUSTABLE OPENING ROOF

REFER STUDIO 89 PS1



WIND ZONE		L	M	H	VH	EH
Ultimate design factored wind speed at building		115km/h	133km/h	158km/h	179km/h	198km/h
		32 m/s	37 m/s	44 m/s	50 m/s	55 m/s

ROOF LOUVRE (3m ROOF HEIGHT)	L	M	H	VH	EH
Louvretec 180 opening slimline roof	4000	4000	3750	3200	2850
Louvretec 200 opening slimline roof	4500	4500	4500	4300	4000
Louvretec 220 opening slimline roof (retract compatible)	4300	4300	4200	4000	3500
Louvretec 220/45 opening alpine* roof (retract compatible)	5000	5000	5000	5000	5000
Louvretec 200 opening suburban roof	4500	4500	4000	3600	3300
Louvretec 270 opening translucent roof	4500	4500	4000	3500	3250

ROOF LOUVRE (6m ROOF HEIGHT)	L	M	H	VH	EH
Louvretec 180 opening slimline roof	4000	4000	3300	2800	2500
Louvretec 200 opening slimline roof	4500	4500	4400	4000	3800
Louvretec 220 opening slimline roof (retract compatible)	4300	4300	4050	3500	3150
Louvretec 220/45 opening alpine* roof (retract compatible)	5000	5000	5000	5000	4700
Louvretec 200 opening suburban roof	4500	4500	3800	3250	3000
Louvretec 270 opening translucent roof	4500	4500	3550	3250	3000

*For larger spans, typically alpine and coastal locations

LouvreTec®

©Louvretec 2025 – All Rights Reserved. Technical specifications subject to change without notice.

STUDIO89 LTD
CONSULTING ENGINEERS

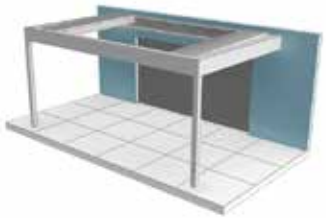

OVERHEAD RETRACT ROOF

REFER STUDIO 89 PS1

WIND ZONE		L	M	H	VH	EH
Ultimate design factored wind speed at building		115km/h	133km/h	158km/h	179km/h	198km/h
		32 m/s	37 m/s	44 m/s	50 m/s	55 m/s

RETRACT ROOF LOUVRE (3m ROOF HEIGHT)	L	M	H	VH	EH
Louvretec 220 retract slimline roof (spiral compatible) 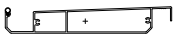	4300	4300	4200	4000	3500
Louvretec 220/45 retract alpine* roof (spiral compatible) 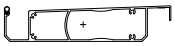	5000	5000	5000	5000	5000

RETRACT ROOF LOUVRE (6m ROOF HEIGHT)	L	M	H	VH	EH
Louvretec 220 retract slimline roof (spiral compatible) 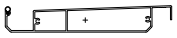	4300	4300	4050	3500	3150
Louvretec 220/45 retract alpine* roof (spiral compatible) 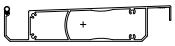	5000	5000	5000	5000	4700

*For larger spans, typically alpine and coastal locations

SNOW LOADS

REFER ENGINEERING SECTION, PAGES 13.31 & 13.32 for Snow Load information.

©Louvretec 2025 – All Rights Reserved. Technical specifications subject to change without notice.

TABLE 2: CALCULATE SUN LOUVRES RL SPANS

MARKPLAN
STRUCTURAL & CIVIL ENGINEERS

SUN LOUVRE APPLICATIONS:

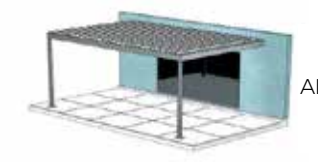

OVERHEAD
ADJUSTABLE & FIXED



HORIZONTAL WALL
ADJUSTABLE & FIXED



VERTICAL WALL
ADJUSTABLE & FIXED

LOUVRETEC SUN LOUVRES CAN BE END FIXED OR BRACKET FIXED

REFER MARKPLAN PS1

WIND ZONE		INSIDE (SELF WT)	L	M	H	VH	EH
Ultimate design factored wind speed at building			115km/h	133km/h	158km/h	179km/h	198km/h
			32 m/s	37 m/s	44 m/s	50 m/s	55 m/s

AIRFOIL SUN LOUVRE	INSIDE (SELF WT)	L	M	H	VH	EH
90MM KISS PIVOT MIDI LOUVRE	2350	2000	1850	1600	1500	1400
150MM KISS & SPIRAL PIVOT MIDI LOUVRE	2900	2750	2500	2200	2000	1900
120MM AIRFOIL LOUVRE	2400	2300	2100	1850	1700	1600
180MM AIRFOIL LOUVRE	3100	2950	2700	2400	2200	2050
200MM MAXI LOUVRE	3700	3700	3550	2950	2600	2350
300MM MAXI LOUVRE	4800	4800	4800	4200	3700	3350
600MM MAXI LOUVRE	5800	5800	5600	4700	4100	3700

©Louvretec 2025 – All Rights Reserved. Technical specifications subject to change without notice.

MARKPLAN
STRUCTURAL & CIVIL ENGINEERS

SUN LOUVRE APPLICATIONS:

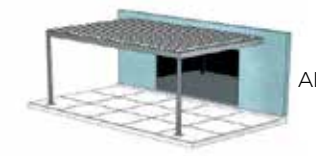

OVERHEAD
ADJUSTABLE & FIXED



HORIZONTAL WALL
ADJUSTABLE & FIXED



VERTICAL WALL
ADJUSTABLE & FIXED

LOUVRETEC SUN LOUVRES CAN BE END FIXED OR BRACKET FIXED

REFER MARKPLAN PS1

WIND ZONE		INSIDE (SELF WT)	L	M	H	VH	EH
Ultimate design factored wind speed at building			115km/h	133km/h	158km/h	179km/h	198km/h
			32 m/s	37 m/s	44 m/s	50 m/s	55 m/s

RECTANGULAR SUN LOUVRE	INSIDE (SELF WT)	L	M	H	VH	EH
120MM FLUSH MINI	2600	2500	2300	2050	1900	1750
180MM FLUSH MIDI	3500	3350	3000	2650	2450	2250
200MM FLUSH MAXI	3500	3350	3000	2650	2450	2250
125MM WEATHERBOARD	2600	2500	2300	2050	1900	1750
180MM WEATHERBOARD	3200	3050	2800	2500	2300	2100
150MM WEATHERBOARD	3200	3050	2750	2400	2200	2050
95MM BELLA VISTA	2550	2100	1900	1700	1550	1450
95MM BELLA VISTA HEAVY	3000	2800	2550	2250	2050	1900
135MM HI-SPAN	4850	4400	4400	4100	3700	3500
165MM HI-SPAN	4950	4500	4500	4200	3800	3500

NEW FULL HEIGHT OPERABLE OR FIXED BALUSTRADE LOUVRES

135MM HI-SPAN NZ COMPLIANT - MAX OPENING BETWEEN BLADES NO WIDER THAN 100MM	3000	3000	3000	3000	3000	3000
165MM HI-SPAN AUSTRALIA COMPLIANT - MAX OPENING BETWEEN BLADES NO WIDER THAN 125MM	3300	3300	3300	3300	3300	3300

©Louvretec 2025 – All Rights Reserved. Technical specifications subject to change without notice.

TABLE 4: CALCULATE SUN LOUVRES RL SPANS

MARKPLAN
STRUCTURAL & CIVIL ENGINEERS

NOTE: ALL LOUVRETEC SUN LOUVRES CAN BE END FIXED OR BRACKET FIXED

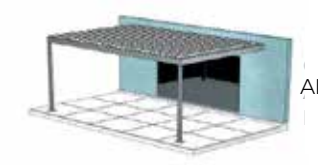

OVERHEAD
ADJUSTABLE & FIXED



HORIZONTAL WALL
ADJUSTABLE & FIXED



VERTICAL WALL
ADJUSTABLE & FIXED

LOUVRETEC SUN LOUVRES CAN ALSO BE END FIXED OR BRACKET FIXED

REFER MARKPLAN PS1

WIND ZONE		INSIDE (SELF WT)	L	M	H	VH	EH
Ultimate design factored wind speed at building			115km/h	133km/h	158km/h	179km/h	198km/h
			32 m/s	37 m/s	44 m/s	50 m/s	55 m/s

RL SUN LOUVRE	INSIDE (SELF WT)	L	M	H	VH	EH
RL 300 SQUARE	5800	5800	5800	5150	4500	4050
RL 450 SQUARE	5800	5800	5800	5150	4500	4050
RL 600 SQUARE	5800	5800	5800	5150	4500	4050
RL 300 MITIRED	5800	5800	5800	5150	4500	4050
RL 450 MITRED	5800	5800	5800	5150	4500	4050
RL 600 MITRED	5800	5800	5800	5150	4500	4050
75 X 45 RHS BEAM WITH SCREW PORTS	5950	5950	5950	5950	5700	5150
100 X 50 X 3 RHS BEAM	6450	6450	6450	6450	6250	5600
150 X 50 X 3 BEAM WITH SCREW PORTS	5800	5800	5800	5150	4500	4050
200 X 50 X 3 RHS BEAM	6450	6450	6450	5600	4900	4400
225 X 50 X 3 RHS BEAM	6450	6450	6150	5250	4600	4150
250 X 50 X 3 RHS BEAM	6450	6450	5850	4950	4350	3900
300 X 50 X 3 RHS BEAM	6450	6400	5700	4900	4250	3850

LouvreTec®

©Louvretec 2025 – All Rights Reserved. Technical specifications subject to change without notice.

STUDIO89 LTD
CONSULTING ENGINEERS

DETERMINING THE TRIBUTARY LENGTH

Typically the tributary length for simply supported beams only is half the length of the louvres span.
Determining the tributary length is shown through figures 1-5 on pages 13.15-17 of this Engineering section.

Note: Care must be taken when cacluating the tributary length for beams on continuous spanning structures as half of the louvre span on either side of the beam may not be equal.

BEAM TYPES

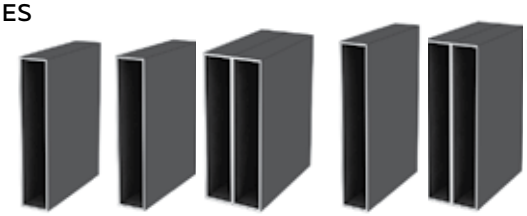

* REFER APPENDIX



Fix double beams together with 2/10g x 25mm S/S pan head self tapping screws 50mm in from top and bottom of box sections at 900mm centres.
Use continuous flexible sealant/adhesive along top and bottom between box sections.

TABLE 5 - BEAM CALCULATIONS SINGLE STORY UP TO 3M

ULS	Max Beam Span (mm)																	
WIND ZONE	Tributary Length	1.00	1.25	1.50	1.75	2.00	2.25	2.50	2.75	3.00	3.25	3.50	3.75	4.00	4.25	4.50	4.75	5.00
+0.92 LOW -1.15	225x50x3 RHS	6.48	6.04	5.73	5.45	5.23	5.04	4.86	4.72	4.59	4.48	4.37	4.27	4.18	4.09	4.01	3.95	3.88
	250x50x3 RHS	6.95	6.64	6.28	5.99	5.74	5.53	5.35	5.18	5.03	4.91	4.79	4.68	4.59	4.5	4.41	4.34	4.26
	2-250x50x3 RHS	6.95	6.95	6.95	6.95	6.95	6.95	6.95	6.85	6.67	6.49	6.34	6.20	6.08	5.96	5.87	5.77	5.68
	300x50x3.5 RHS	6.95	6.95	6.95	6.95	6.95	6.83	6.60	6.41	6.24	6.06	5.92	5.80	5.68	5.56	5.46	5.35	5.21
	2-300x50x3.5 RHS	6.95	6.95	6.95	6.95	6.95	6.95	6.95	6.95	6.95	6.95	6.95	6.95	6.95	6.95	6.95	6.95	6.95
+1.23 MEDIUM -1.53	225x50x3 RHS	6.36	5.94	5.63	5.35	5.14	4.96	4.78	4.63	4.51	4.41	4.30	4.19	4.10	4.03	3.95	3.88	3.83
	250x50x3 RHS	6.95	6.54	6.18	5.89	5.65	5.42	5.26	5.11	4.96	4.82	4.71	4.61	4.50	4.43	4.35	4.26	4.20
	2-250x50x3 RHS	6.95	6.95	6.95	6.95	6.95	6.95	6.92	6.74	6.55	6.40	6.24	6.11	5.99	5.88	5.76	5.66	5.56
	300x50x3.5 RHS	6.95	6.95	6.95	6.95	6.95	6.72	6.50	6.30	6.14	5.97	5.83	5.70	5.58	5.46	5.37	5.26	5.14
	2-300x50x3.5 RHS	6.95	6.95	6.95	6.95	6.95	6.95	6.95	6.95	6.95	6.95	6.95	6.95	6.95	6.95	6.95	6.95	6.88
+1.74 HIGH -2.17	225x50x3 RHS	6.18	5.75	5.41	5.15	4.92	4.7	4.46	4.26	4.08	3.92	3.78	3.65	3.54	3.43	3.33	3.25	3.16
	250x50x3 RHS	6.79	6.30	5.94	5.64	5.40	5.14	4.87	4.65	4.45	4.28	4.13	3.99	3.86	3.75	3.64	3.55	3.46
	2-250x50x3 RHS	6.95	6.95	6.95	6.95	6.95	6.88	6.64	6.44	6.24	6.00	5.79	5.60	5.42	5.26	5.12	4.98	4.86
	300x50x3.5 RHS	6.95	6.95	6.95	6.93	6.49	6.12	5.81	5.54	5.31	5.10	4.92	4.75	4.60	4.46	4.34	4.22	4.12
	2-300x50x3.5 RHS	6.95	6.95	6.95	6.95	6.95	6.95	6.95	6.95	6.95	6.95	6.95	6.95	6.81	6.61	6.43	6.26	6.11
+2.24 VERY HIGH -2.80	225x50x3 RHS	5.50	5.10	4.80	4.57	4.28	4.03	3.83	3.65	3.5	3.36	3.24	3.13	3.04	2.95	2.86	2.79	2.72
	250x50x3 RHS	6.04	5.60	5.27	4.99	4.67	4.41	4.18	3.99	3.82	3.68	3.54	3.42	3.32	3.22	3.13	3.04	2.97
	2-250x50x3 RHS	6.95	6.95	6.95	6.64	6.35	6.13	5.85	5.59	5.36	5.15	4.97	4.81	4.66	4.52	4.40	4.28	4.18
	300x50x3.5 RHS	6.95	6.93	6.41	5.94	5.56	5.25	4.99	4.76	4.56	4.38	4.22	4.08	3.95	3.83	3.73	3.63	3.54
	2-300x50x3.5 RHS	6.95	6.95	6.95	6.95	6.95	6.95	6.95	6.95	6.73	6.48	6.25	6.04	5.85	5.68	5.53	5.38	5.25
+2.71 EXTRA HIGH -3.39	225x50x3 RHS	5.05	4.70	4.41	4.09	3.83	3.62	3.43	3.28	3.14	3.02	2.91	2.81	2.72	2.64	2.57	2.5	2.44
	250x50x3 RHS	5.54	5.16	4.82	4.47	4.18	3.95	3.75	3.58	3.43	3.29	3.18	3.07	2.97	2.88	2.8	2.73	2.66
	2-250x50x3 RHS	6.95	6.80	6.44	6.12	5.84	5.52	5.25	5.01	4.80	4.62	4.46	4.31	4.18	4.05	3.94	3.84	3.74
	300x50x3.5 RHS	6.87	6.27	5.74	5.32	4.99	4.71	4.47	4.26	4.08	3.93	3.78	3.66	3.54	3.44	3.34	3.25	3.17
	2-300x50x3.5 RHS	6.95	6.95	6.95	6.95	6.95	6.94	6.59	6.30	6.04	5.81	5.60	5.42	5.25	5.09	4.95	4.82	4.70

PLEASE NOTE:
Aluminium Beams have been limited to 6.95m in length.
This is the maximum practical length for extruding and powdercoating.

©Louvretec 2025 - All Rights Reserved. Technical specifications subject to change without notice.

TABLE 6: TO CALCULATE TRIBUTARY LENGTH FOR BEAMS
CHART: BEAM CALCULATIONS DOUBLE STORY UP TO 6 METRE ROOF HEIGHT. REFER STUDIO 89 PS1

STUDIO89 LTD
CONSULTING ENGINEERS

DETERMINING THE TRIBUTARY LENGTH

Typically the tributary length for simply supported beams only is half the length of the louvres span.
Determining the tributary length is shown through figures 1-5 on pages 13.15-17 of this Engineering section.

Note: Care must be taken when cacluating the tributary length fo ontinuous spanning structures as half of the louvre span on either side of the beam may nc

BEAM TYPES

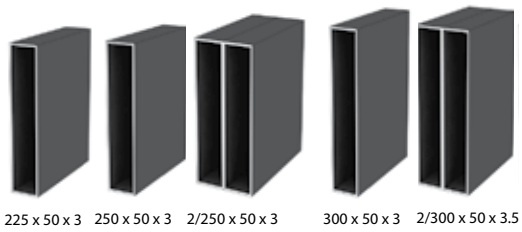

* REFER APPENDIX

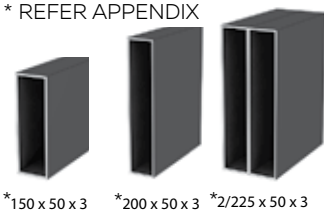

Fix double beams together with 2/10g x 25mm S/S pan head self tapping screws 50mm in from top and bottom of box sections at 900mm centres.
Use continuous flexible sealant/adhesive along top and bottom between box sections.

TABLE 6 - BEAM CALCULATIONS DOUBLE STORY UP TO 6M

ULS	Max Beam Span (mm)																	
WIND ZONE	Tributary Length	1.00	1.25	1.50	1.75	2.00	2.25	2.50	2.75	3.00	3.25	3.50	3.75	4.00	4.25	4.50	4.75	5.00
+0.92 LOW -1.15	225x50x3 RHS	6.48	6.05	5.73	5.44	5.24	5.04	4.86	4.73	4.59	4.47	4.36	4.26	4.17	4.11	4.03	3.96	3.88
	250x50x3 RHS	6.95	6.63	6.27	5.98	5.73	5.52	5.33	5.18	5.04	4.91	4.78	4.68	4.59	4.48	4.41	4.33	4.27
	2-250x50x3 RHS	6.95	6.95	6.95	6.95	6.95	6.95	6.95	6.85	6.67	6.49	6.35	6.21	6.09	5.97	5.87	5.76	5.66
	300x50x3.5 RHS	6.95	6.95	6.95	6.95	6.95	6.78	6.57	6.38	6.20	6.05	5.91	5.77	5.65	5.55	5.44	5.33	5.2
	2-300x50x3.5 RHS	6.95	6.95	6.95	6.95	6.95	6.95	6.95	6.95	6.95	6.95	6.95	6.95	6.95	6.95	6.95	6.95	6.95
+1.23 MEDIUM -1.53	225x50x3 RHS	6.38	5.95	5.62	5.36	5.15	4.95	4.79	4.60	4.40	4.23	4.08	3.94	3.82	3.70	3.60	3.50	3.42
	250x50x3 RHS	6.95	6.53	6.19	5.88	5.64	5.43	5.25	5.02	4.81	4.62	4.46	4.30	4.17	4.05	3.93	3.83	3.73
	2-250x50x3 RHS	6.95	6.95	6.95	6.95	6.95	6.95	6.93	6.72	6.54	6.39	6.25	6.08	5.89	5.71	5.55	5.41	5.27
	300x50x3.5 RHS	6.95	6.95	6.95	6.95	6.93	6.64	6.30	6.00	5.75	5.52	5.32	5.14	4.98	4.83	4.69	4.57	4.45
	2-300x50x3.5 RHS	6.95	6.95	6.95	6.95	6.95	6.95	6.95	6.95	6.95	6.95	6.95	6.95	6.95	6.95	6.95	6.82	6.64
+1.74 HIGH -2.17	225x50x3 RHS	5.57	5.19	4.87	4.64	4.36	4.11	3.90	3.72	3.57	3.43	3.31	3.19	3.09	3.00	2.92	2.84	2.77
	250x50x3 RHS	6.12	5.68	5.35	5.08	4.76	4.49	4.26	4.07	3.90	3.75	3.61	3.49	3.38	3.28	3.19	3.10	3.03
	2-250x50x3 RHS	6.95	6.95	6.95	6.74	6.45	6.21	5.97	5.7	5.46	5.25	5.07	4.90	4.75	4.61	4.48	4.36	4.26
	300x50x3.5 RHS	6.95	6.95	6.56	6.08	5.69	5.37	5.09	4.86	4.65	4.47	4.31	4.16	4.03	3.91	3.8	3.70	3.61
	2-300x50x3.5 RHS	6.95	6.95	6.95	6.95	6.95	6.95	6.95	6.95	6.86	6.60	6.37	6.16	5.97	5.79	5.63	5.48	5.35
+2.24 VERY HIGH -2.80	225x50x3 RHS	4.98	4.64	4.33	4.02	3.76	3.55	3.37	3.22	3.08	2.96	2.85	2.76	2.67	2.59	2.52	2.45	2.39
	250x50x3 RHS	5.48	5.10	4.73	4.39	4.11	3.88	3.68	3.51	3.36	3.23	3.12	3.01	2.92	2.83	2.75	2.68	2.61
	2-250x50x3 RHS	6.95	6.71	6.34	6.03	5.73	5.42	5.15	4.92	4.72	4.54	4.38	4.23	4.10	3.98	3.87	3.77	3.68
	300x50x3.5 RHS	6.81	6.18	5.65	5.24	4.91	4.63	4.39	4.19	4.02	3.86	3.72	3.59	3.48	3.38	3.28	3.20	3.12
	2-300x50x3.5 RHS	6.95	6.95	6.95	6.95	6.95	6.81	6.47	6.18	5.93	5.70	5.50	5.32	5.15	5.00	4.86	4.74	4.62
+2.71 EXTRA HIGH -3.39	225x50x3 RHS	4.61	4.25	3.89	3.61	3.38	3.19	3.03	2.89	2.77	2.66	2.57	2.48	2.4	2.33	2.27	2.21	2.15
	250x50x3 RHS	5.07	4.64	4.25	3.94	3.69	3.49	3.31	3.16	3.03	2.91	2.80	2.71	2.62	2.55	2.48	2.41	2.35
	2-250x50x3 RHS	6.66	6.22	5.88	5.49	5.16	4.87	4.63	4.42	4.24	4.08	3.94	3.81	3.69	3.58	3.48	3.39	3.31
	300x50x3.5 RHS	6.19	5.55	5.08	4.71	4.41	4.16	3.95	3.77	3.61	3.47	3.34	3.23	3.13	3.04	2.95	2.87	2.8
	2-300x50x3.5 RHS	6.95	6.95	6.95	6.90	6.48	6.12	5.82	5.56	5.33	5.13	4.95	4.78	4.63	4.50	4.37	4.26	4.15

PLEASE NOTE:
Aluminium Beams have been limited to 6.95m in length.
This is the maximum practical length for extruding and powdercoating.

©Louvretec 2025 - All Rights Reserved. Technical specifications subject to change without notice.

TYPICAL DETAIL | SIMPLY SUPPORTED BEAM, FIGURE 1

Plan view / Louvre and Beam Design

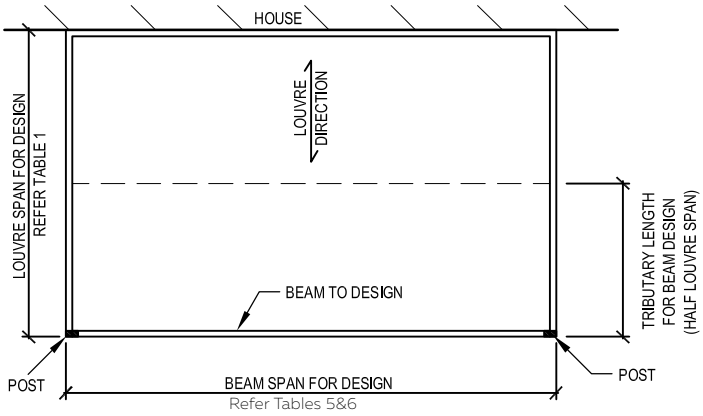

Front Elevation

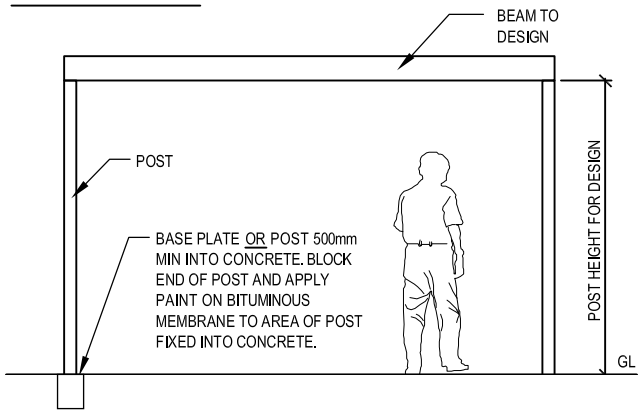

TYPICAL DETAIL // SIMPLY SUPPORTED BEAM, FIGURE 2

Plan view / Louvre and Beam Design

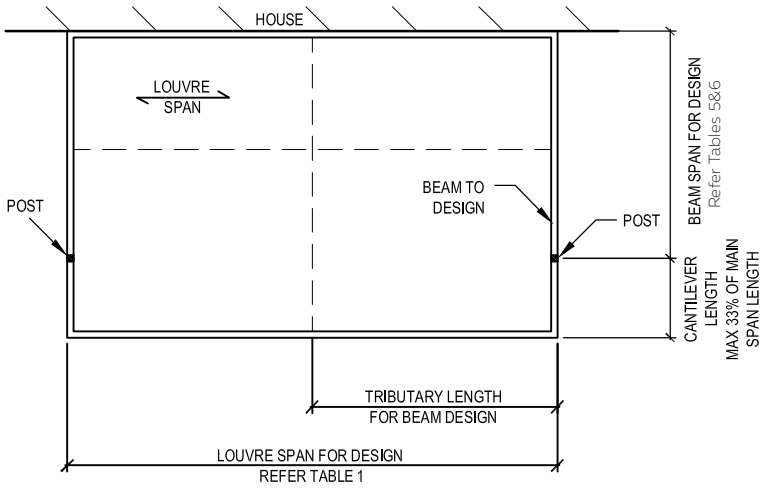

Front Elevation

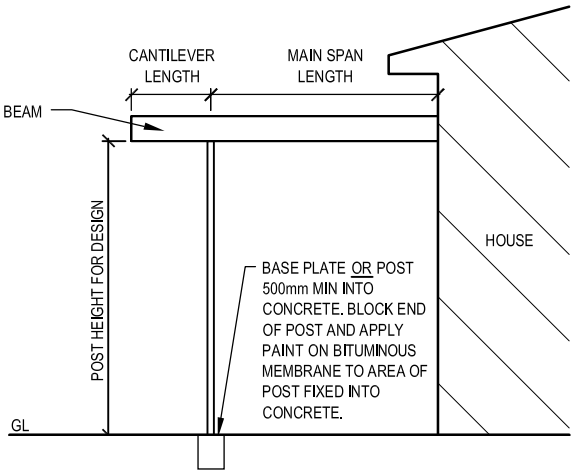

©Louvretec 2025 – All Rights Reserved. Technical specifications subject to change without notice.

TYPICAL DETAIL | CONTINUOUS BEAM SPAN OPTION 1, FIGURE 3

Plan view / Louvre and Beam Design

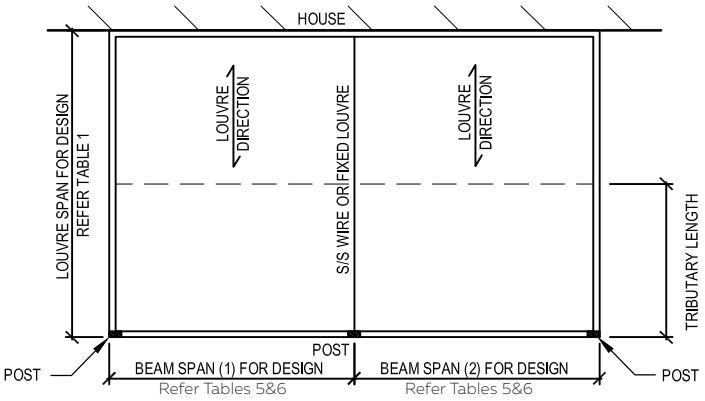

Front Elevation

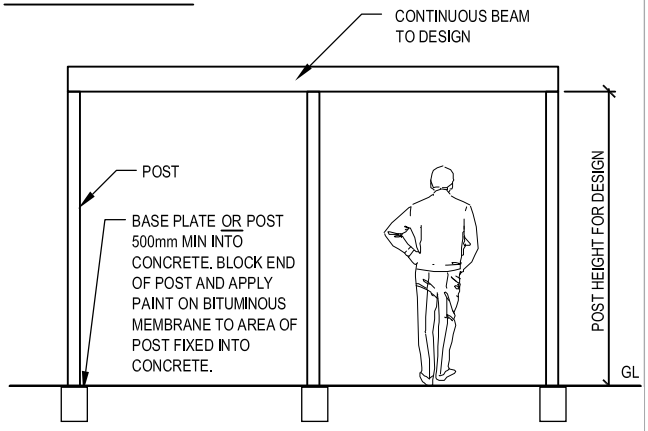

TYPICAL DETAIL // CONTINUOUS BEAM SPAN, OPTION 2, FIGURE 4

Plan view / Louvre and Beam Design

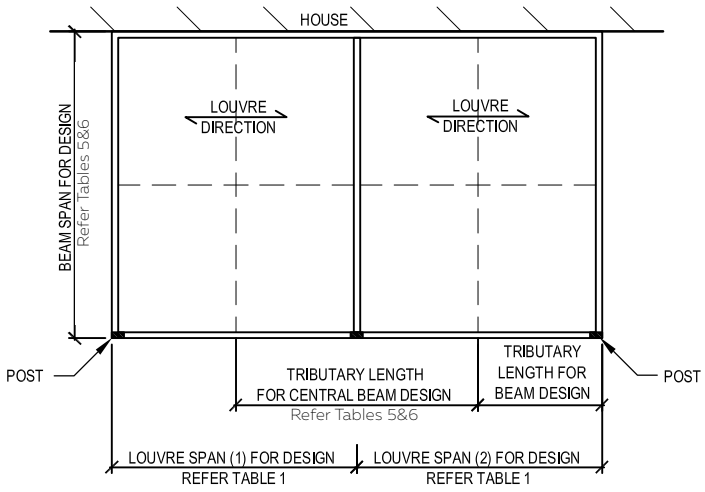

Front Elevation

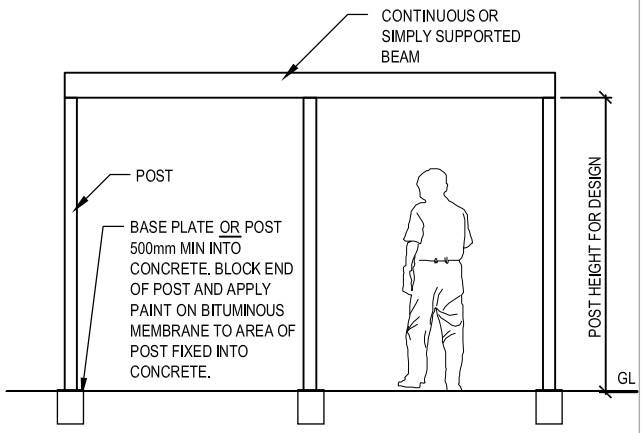

©Louvretec 2025 - All Rights Reserved. Technical specifications subject to change without notice.

TYPICAL DETAIL // SIMPLY SUPPORTED BEAM, FIGURE 5

Plan view / Louvre and Beam Design

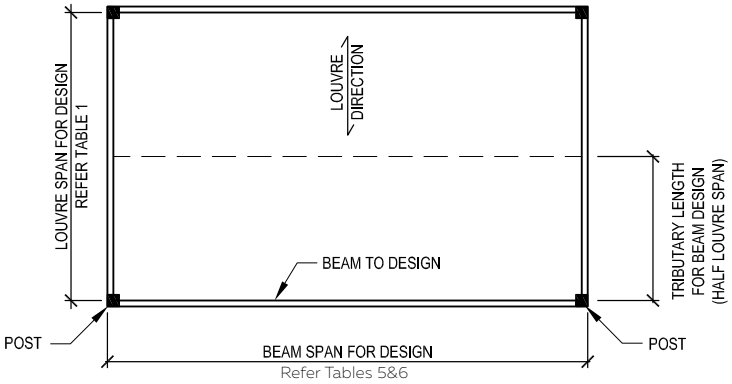

Front Elevation

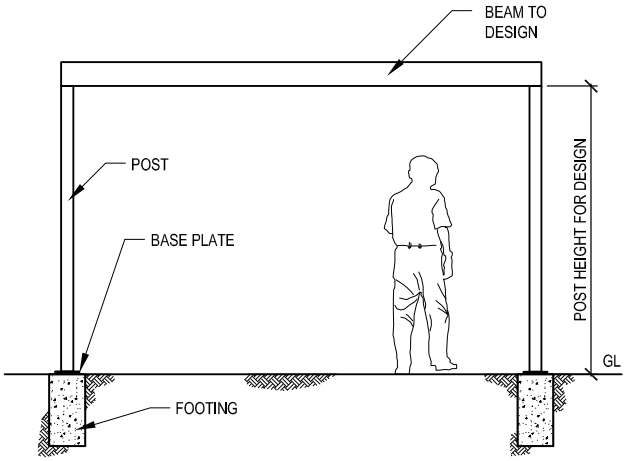

TYPICAL DETAIL // SIMPLY SUPPORTED EXTERNAL BEAM WITH INTERNAL CONNECTED BEAM

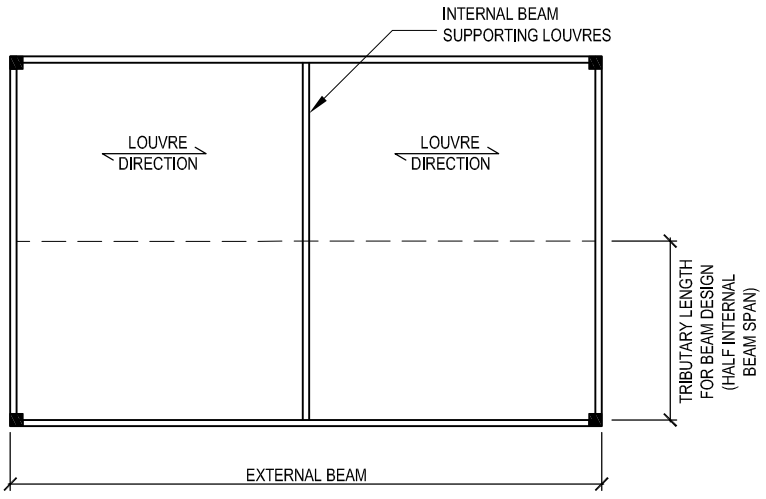

NOTES

1. WHERE AN EXTERNAL BEAM SUPPORTS ONE INTERNAL BEAM THAT SUPPORTS THE LOUVRES, THE EXTERNAL BEAM SHOULD BE DESIGNED USING A LOUVRE TRIBUTARY LENGTH EQUAL TO HALF OF THE LENGTH OF THE INTERNAL BEAM. THE INTERNAL BEAM SHALL BE DESIGNED AS A TYPICAL BEAM SUPPORTING LOUVRES.

2. THE INTERNAL BEAM CAN BE LOCATED ANYWHERE ALONG THE LENGTH OF THE EXTERNAL BEAM.

©Louvretec 2025 – All Rights Reserved. Technical specifications subject to change without notice.

SPECIFIYING POSTS

To use the following tables you need to know the Tributary Area (Roof Area) on the post, the Tributary Edge Length (L_E) and the height of the post. For Tributary Area and Tributary Edge refer to page 19.

POST LOADS

Wind speeds taken from NZS 3604; 2011, are ultimate limit state wind speeds

L = Low wind speed
M = Medium wind speed
H = High wind speed
VH = Very high wind speed
EH = Extra high wind speed

	ULS (capacity)					SLS (deflection)				
Wind Zone	L	M	H	VH	EH	L	M	H	VH	EH
Factored design wind speed at building (m/s)	32	37	44	50	55	27	31	37	42	46
Drag pressure on beam (kPa) (for C_{fig} = 1.45)	0.74	0.99	1.40	1.81	2.18	0.54	0.71	1.01	1.30	1.55
Drag pressure on roof (kPa) (for C_{fig} = 0.04)	0.02	0.03	0.04	0.05	0.06	0.01	0.02	0.03	0.04	0.04

©Louvretec 2025 - All Rights Reserved. Technical specifications subject to change without notice.

TYPICAL DETAIL | SIMPLY SUPPORTED BEAM (FIGURE 6) AND CANTILEVERED BEAM (FIGURE 7)

FIGURE 6

PLAN VIEW SIMPLY SUPPORTED BEAM

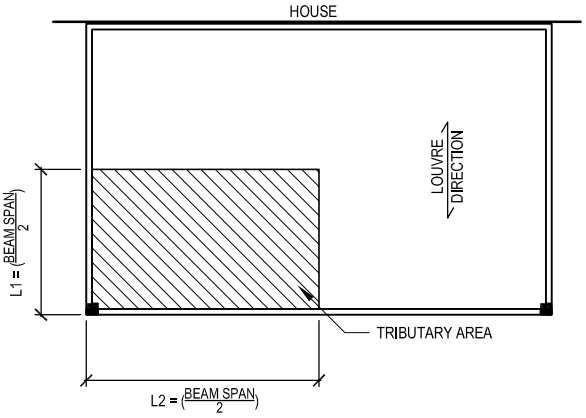

FIGURE 7

PLAN VIEW CANTILEVERED BEAM

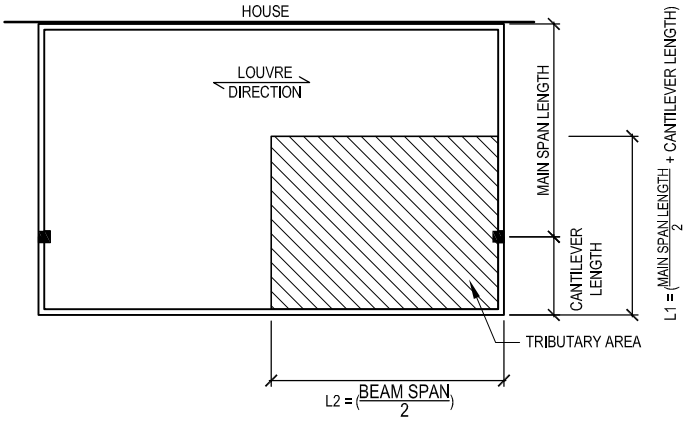

FIGURE 8

PLAN VIEW

L2 is longer than L1
therefore: LE = L2

Refer Note 3.

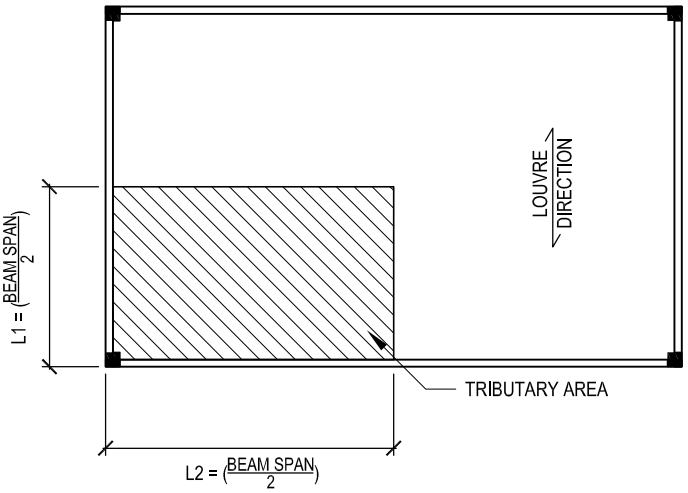

NOTES

1. THE TRIB AREA FOR A POST AND FOOTING IS THE PRODUCT OF HALF THE DISTANCE TO THE ADJACENT SUPPORTS IN EACH DIRECTION ie; L1 X L2 (SEE FIG.6)
2. WHERE A POST SUPPORTS A CANTILEVER, CONSIDER FOR THE FULL CANTILEVER LENGTH (SEE FIG.7)
3. TRIBUTARY EDGE LENGTH (L_E) IS USED TO SELECT POST SIZE.
   FOR A STRUCTURE ATTACHED TO A HOUSE, L_E = L1(PERPENDICULAR TO HOUSE)
   FOR A FREE STANDING STRUCTURE, L_E = THE LONGER OF L1 & L2 (SEE FIG.8)

©Louvretec 2025 – All Rights Reserved. Technical specifications subject to change without notice.

TYPICAL DETAIL | CONTINUOUS BEAM SPAN OPTION 2

PLAN VIEW POST FOOTING & POST DESIGN

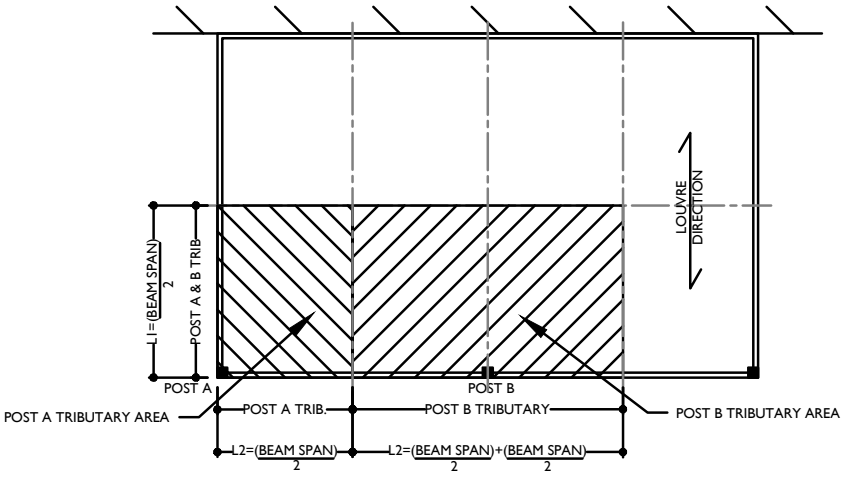

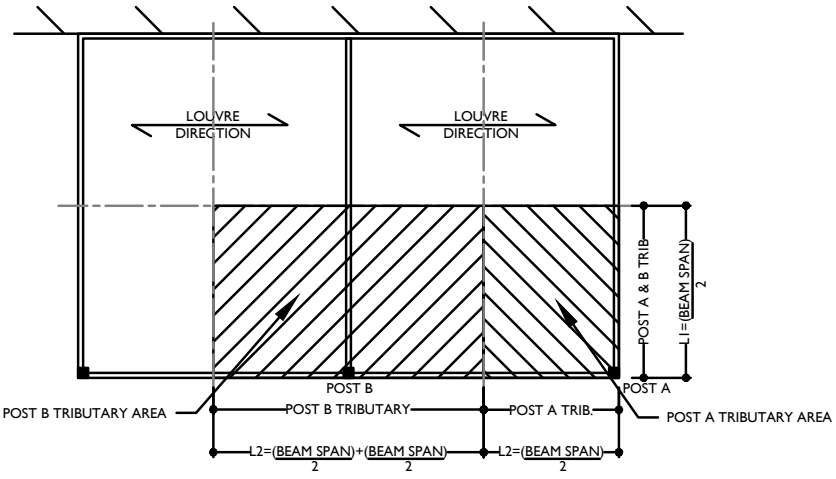

©Louvretec 2025 – All Rights Reserved. Technical specifications subject to change without notice.


URBNSURF

STUDIO89 LTD
CONSULTING ENGINEERS

LOW WIND ZONE: POST HEIGHT = 2.4m

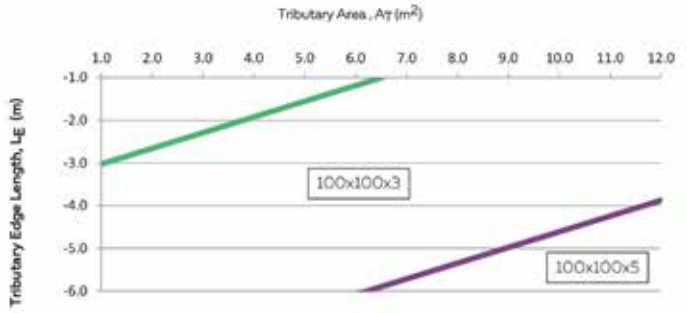

LOW WIND ZONE: POST HEIGHT = 2.7m

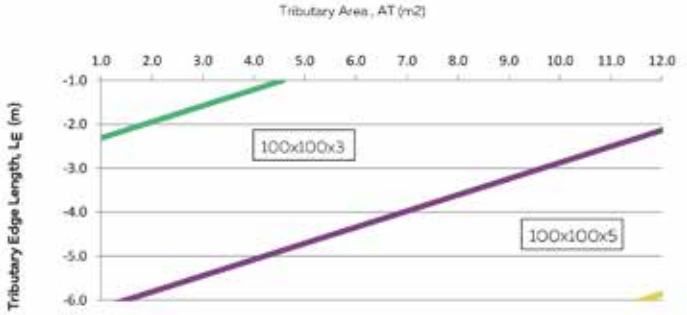

LOW WIND ZONE: POST HEIGHT = 3m

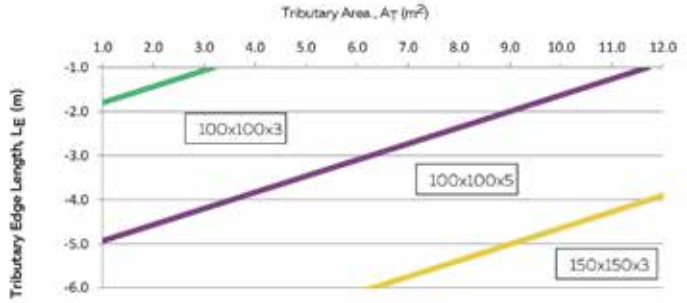

LOW WIND ZONE: POST HEIGHT = 3.5m

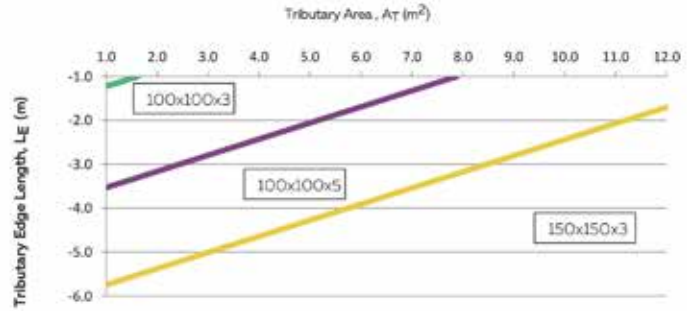

©Louvretec 2025 – All Rights Reserved. Technical specifications subject to change without notice.

STUDIO89 LTD
CONSULTING ENGINEERS

MEDIUM WIND ZONE: POST HEIGHT = 2.4m

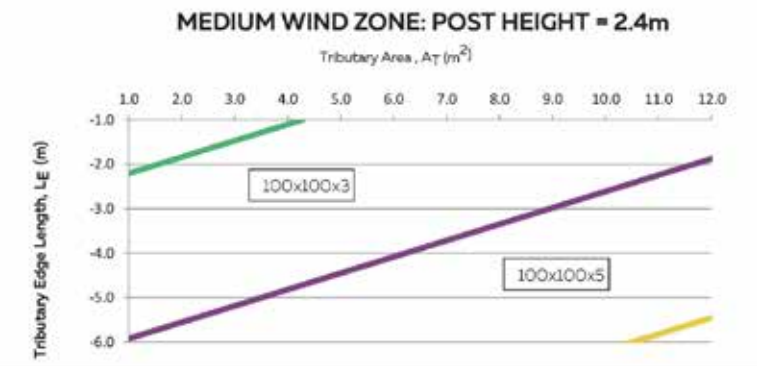

MEDIUM WIND ZONE: POST HEIGHT = 2.7m

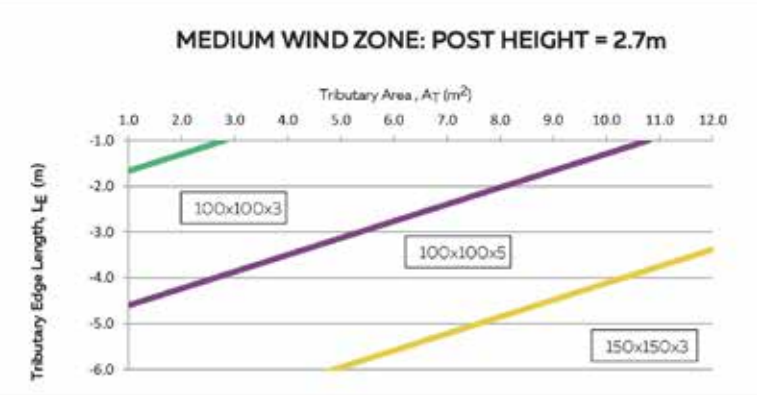

MEDIUM WIND ZONE: POST HEIGHT = 3m

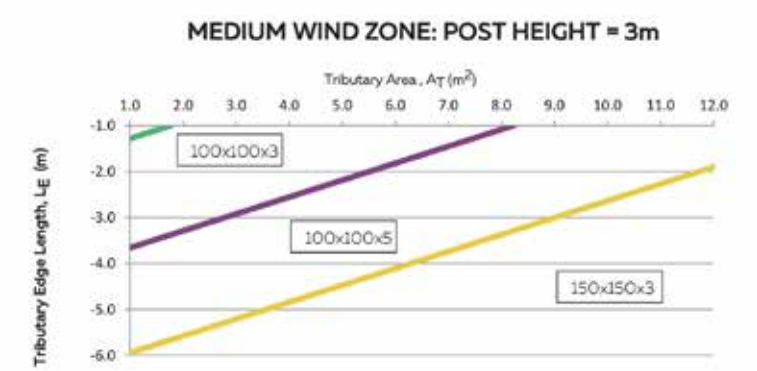

MEDIUM WIND ZONE: POST HEIGHT = 3.5m

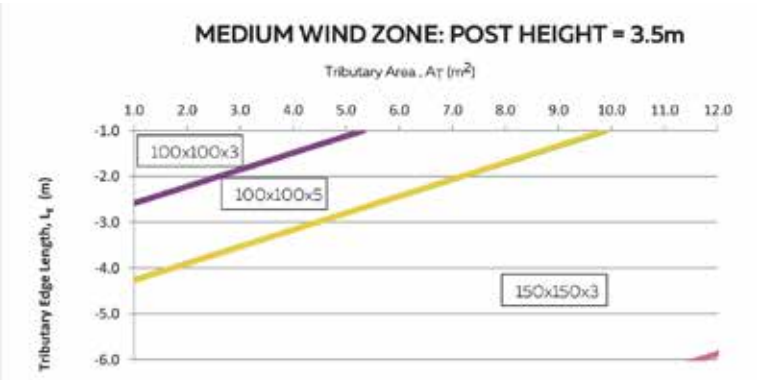

©Louvretec 2025 – All Rights Reserved. Technical specifications subject to change without notice.

STUDIO89 LTD
CONSULTING ENGINEERS

HIGH WIND ZONE: POST HEIGHT = 2.4m

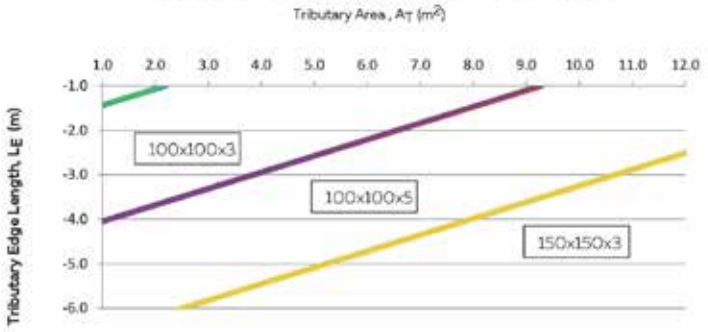

HIGH WIND ZONE: POST HEIGHT = 2.7m

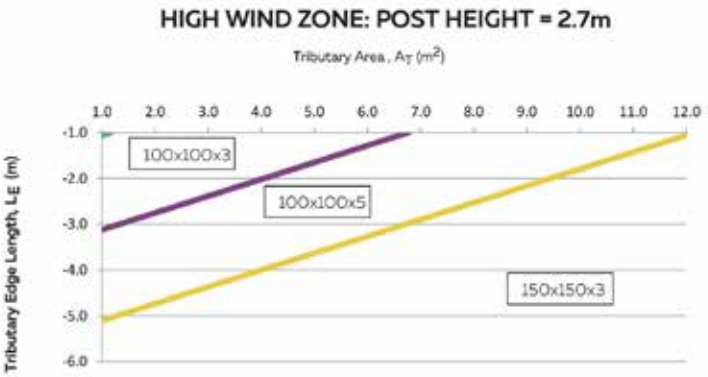

HIGH WIND ZONE: POST HEIGHT = 3m

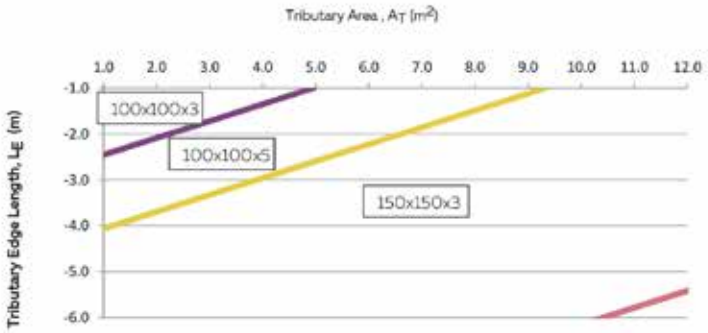

HIGH WIND ZONE: POST HEIGHT = 3.5m

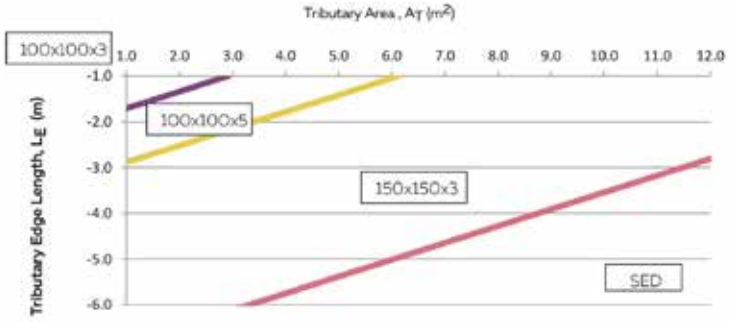

©Louvretec 2025 – All Rights Reserved. Technical specifications subject to change without notice.

STUDIO89 LTD
CONSULTING ENGINEERS

VERY HIGH WIND ZONE: POST HEIGHT = 2.4m

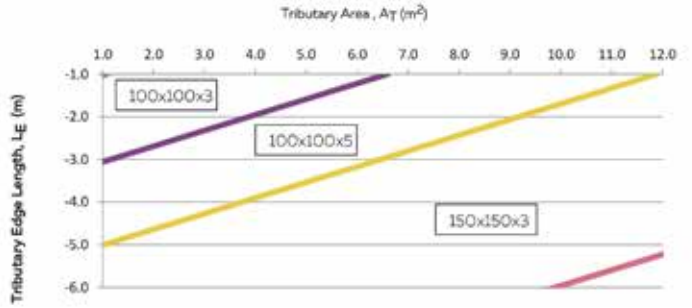

VERY HIGH WIND ZONE: POST HEIGHT = 2.7m

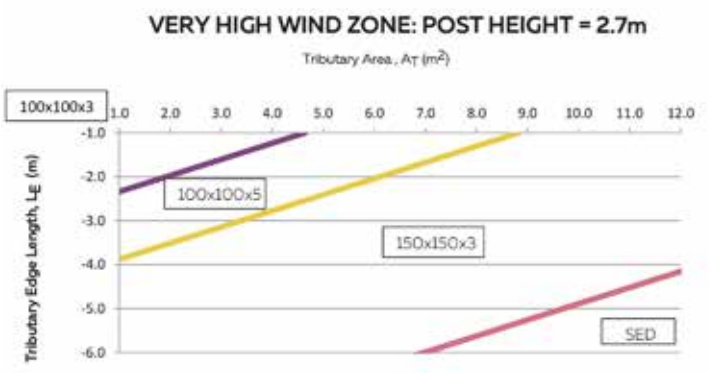

VERY HIGH WIND ZONE: POST HEIGHT = 3m

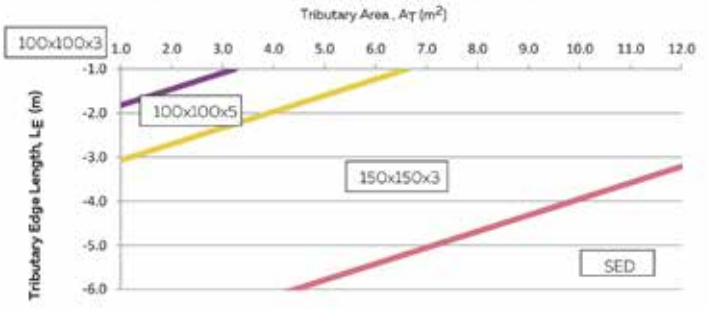

VERY HIGH WIND ZONE: POST HEIGHT = 3.5m

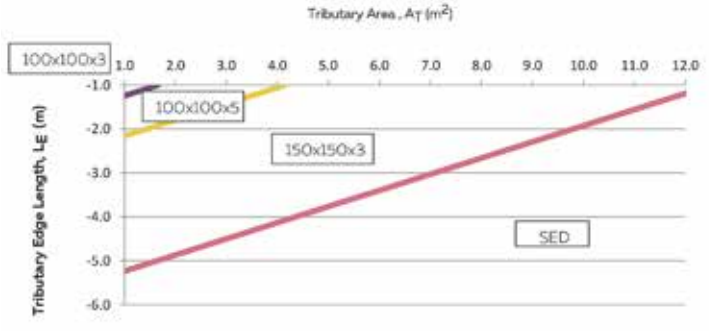

©Louvretec 2025 – All Rights Reserved. Technical specifications subject to change without notice.

STUDIO89 LTD
CONSULTING ENGINEERS

EXTRA HIGH WIND ZONE: POST HEIGHT = 2.4m

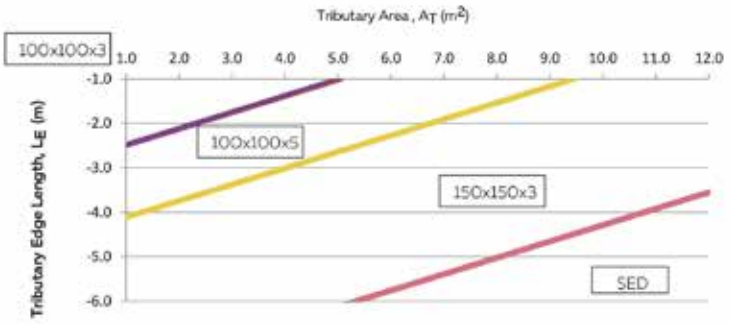

EXTRA HIGH WIND ZONE: POST HEIGHT = 2.7m

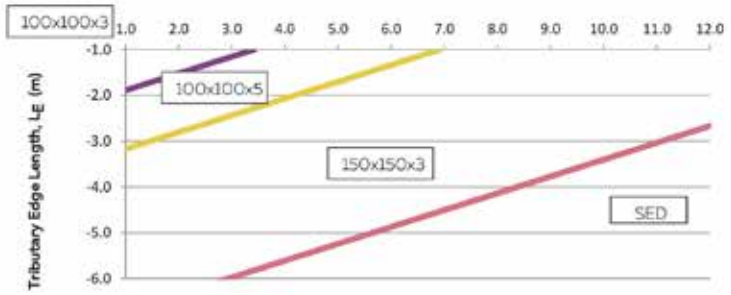

EXTRA HIGH WIND ZONE: POST HEIGHT = 3m

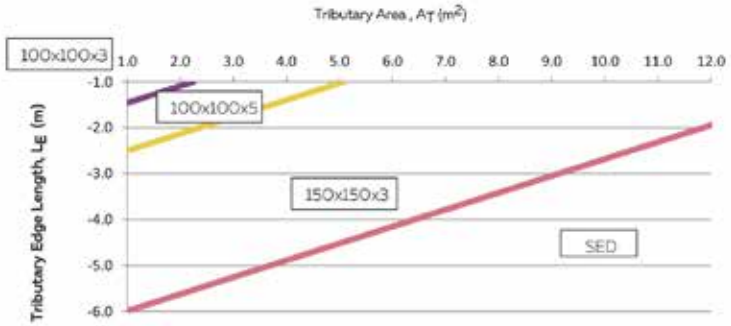

EXTRA HIGH WIND ZONE: POST HEIGHT = 3.5m

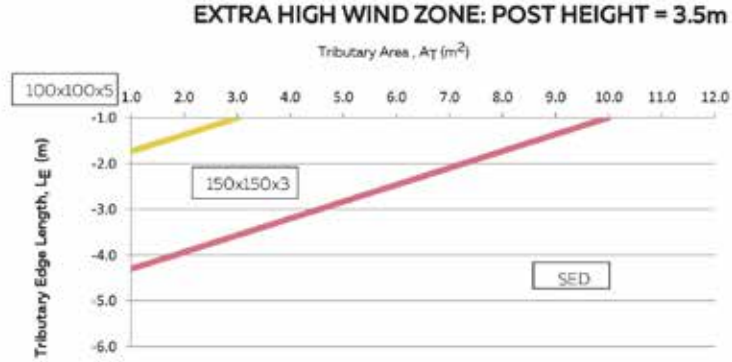

©Louvretec 2025 – All Rights Reserved. Technical specifications subject to change without notice.

STUDIO89 LTD
CONSULTING ENGINEERS

Post Footing Calculations

GOOD GROUND

Ground conditions are considered a minimum of "good ground" as per NZS3604, within minimum soil properties as follow:

Geotechnical ultimate bearing capacity = 300kPa (apply 0.5 safety factor)

Undrained shear strength = 100kPa (apply 0.5 safety factor)

Geotechnical ultimate skin friction capacity = 20kPa (apply 0.5 safety factor)

Questionable ground conditions must be reviewed by Engineer

- If Louvre frame is supported by building on less than 2 sides, **uplift AND bracing** must be considered for Footing Calculations (Tables 1a, 1b & 2).
  If Louvre frame is supported by building on 2 or more sides, **uplift** only needs to be considered (Tables 1a & 1b only).

TABLE 1a MINIMUM CONCRETE VOLUME FOR ROOF TRIBUTARY ROOF AREA ON POST TO RESIST *UPLIFT*

	Concrete Volume Required (m^3)				
Wind Zone:	L	M	H	VH	EH
Tributary Area (m^2)					
1.0	0.03	0.04	0.06	0.08	0.10
2.0	0.06	0.09	0.12	0.16	0.20
3.0	0.09	0.13	0.19	0.25	0.30
4.0	0.12	0.17	0.25	0.33	0.40
5.0	0.15	0.21	0.31	0.41	0.50
6.0	0.18	0.26	0.37	0.49	0.60
7.0	0.22	0.30	0.44	0.57	0.70
8.0	0.25	0.34	0.50	0.65	0.80
9.0	0.28	0.38	0.56	0.74	0.90

DESIGN PROCEDURE

(1) Determine the tributary area on post (determined previously for post design)

(2) From Table 1a, determine the minimum concrete volume to resist uplift based on tributary area.

(3) From Table 1b, determine the Footing Dimensions required for minimum volume calculated in (2). If bracing is required to be considered, please follow steps (4) and (5) below.

(4) From Table 2, determine Footing Dimensions based on the post size selected. For ease of comparing, select same Footing Type as selected in (3)

(5) Please use maximum of dimensions from (3) and (4)

TABLE 1b FOOTING DIMENSIONS REQUIRED FOR PARTICULAR VOLUMES FOR *UPLIFT* RESISTANCE

	ROUND PILES				SQUARE PADS	
Volume (m^3)	300 diameter	400 diameter	450 diameter	600 diameter	Square pad 300mm deep	Square pad 600mm deep
	minimum depth (mm)				minimum dimension (mm)	
0.1	700	650	600	550	600	400
0.2	950	800	750	650	800	600
0.3	1150	950	850	700	1000	700
0.4	1350	1100	1000	800	1150	800
0.6	1800	1400	1250	1000	1400	1000
0.8	2250	1700	1550	1200	1650	1150
1.0	2650	2000	1800	1400	1850	1300

NB: Round piles depths are calculated including skin friction so final concrete volume will differ to that in first column.

TABLE 2 MINIMUM FOOTING SIZES REQUIRED FOR *BRACING* OF EACH POST SIZE

	ROUND PILES				SQUARE PADS	
Post Size	300 diameter	400 diameter	450 diameter	600 diameter	Square pad 300mm deep	Square pad 600mm deep
	minimum depth (mm)				minimum dimension (mm)	
100x100x3	1100	1000	1000	900	1000	800
100x100x5	-	1100	1100	1000	1200	900
150x150x3	-	1300	1200	1200	1400	1100
100x100x4 SHS	-	1300	1200	1200	1400	1100

CONCRETE TO BE MINIMUM 20MPa

©Louvretec 2025 – All Rights Reserved. Technical specifications subject to change without notice.

SQUARE PAD FOOTINGS 300 DEEP

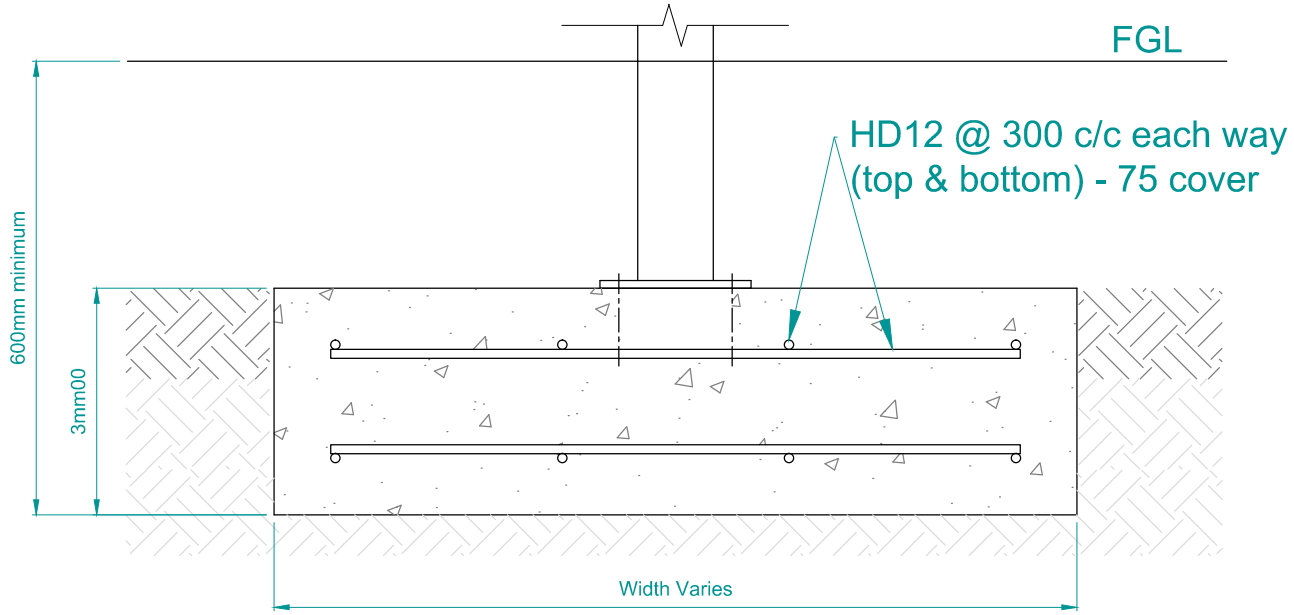

SQUARE PAD FOOTINGS 600 DEEP

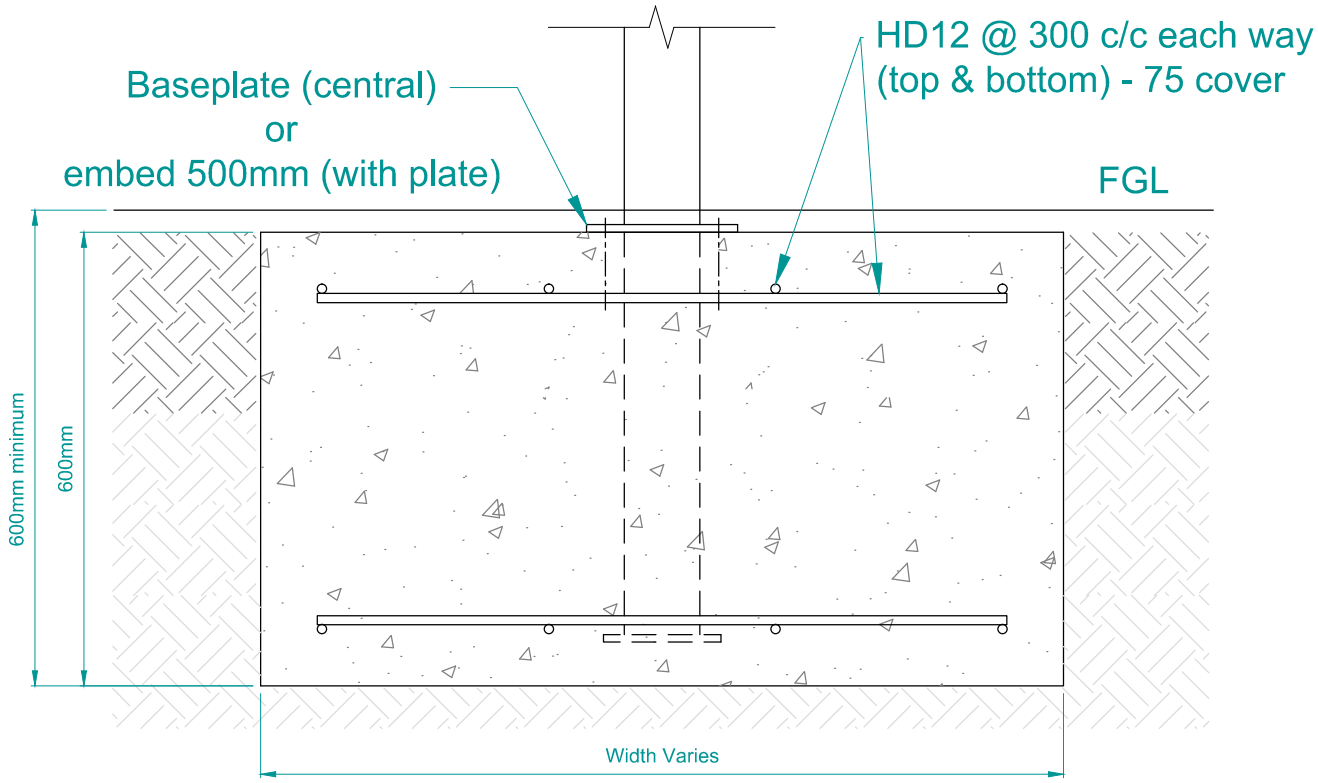

©Louvretec 2025 – All Rights Reserved. Technical specifications subject to change without notice.

ROUND PILE FOOTINGS

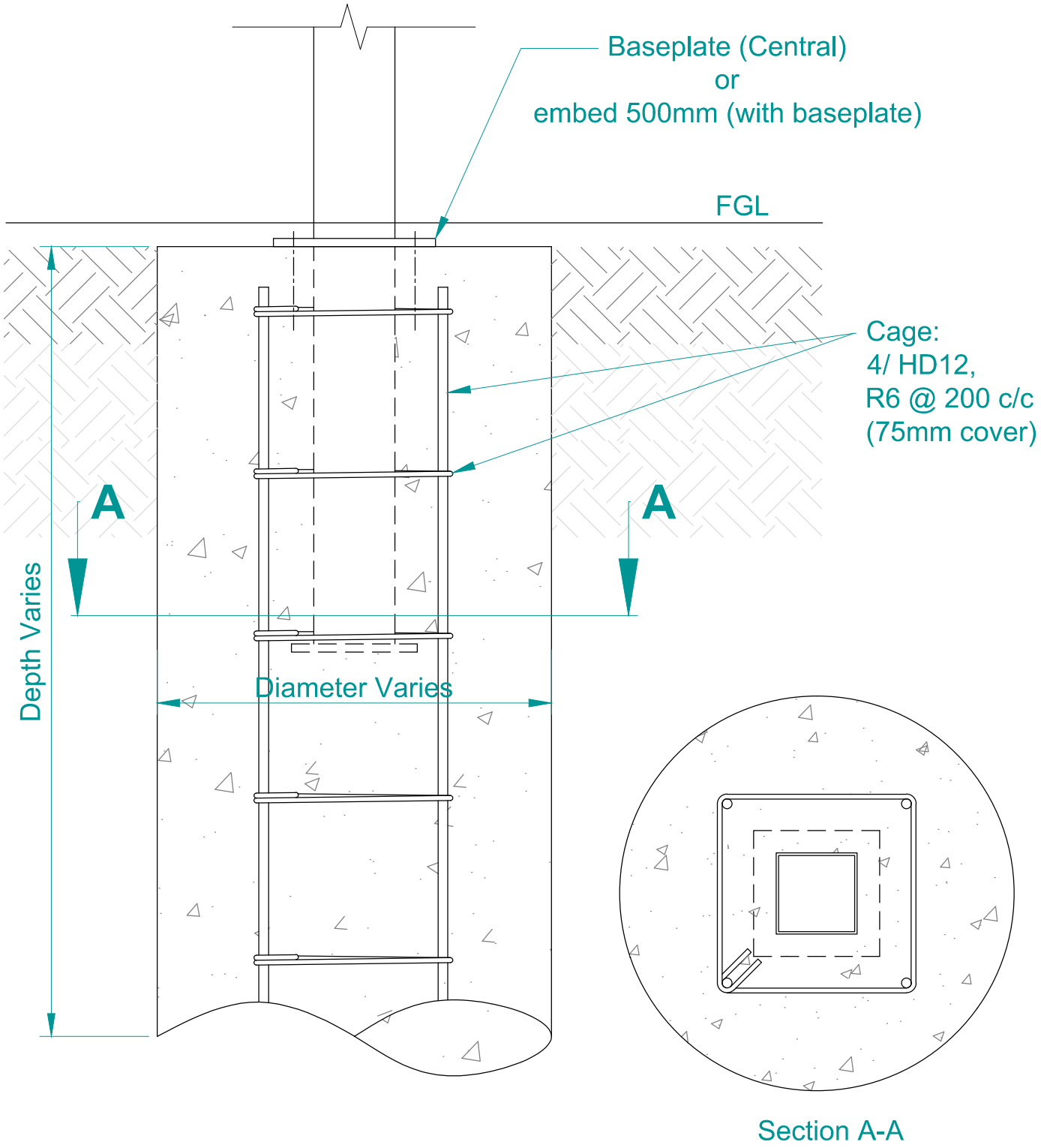

©Louvretec 2025 – All Rights Reserved. Technical specifications subject to change without notice.

STUDIO89 LTD
CONSULTING ENGINEERS

TYPICAL DETAIL BASE PLATE SIZES FOR VARIOUS POSTS, SUBSTRATES & FIXINGS

100X100 ALUMINIUM POST BASE PLATE CONCRETE SUBSTRATE

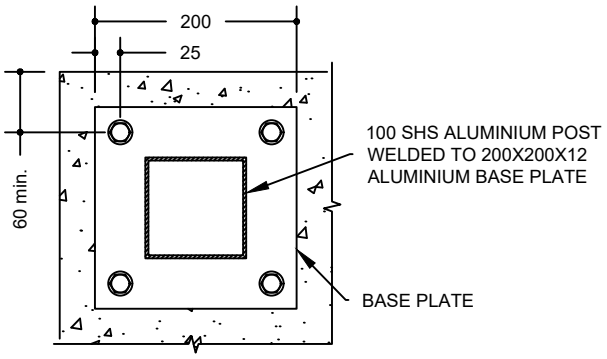

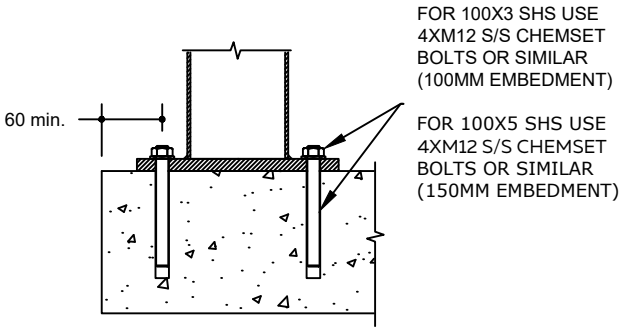

150X150 ALUMINIUM POST BASE PLATE CONCRETE SUBSTRATE

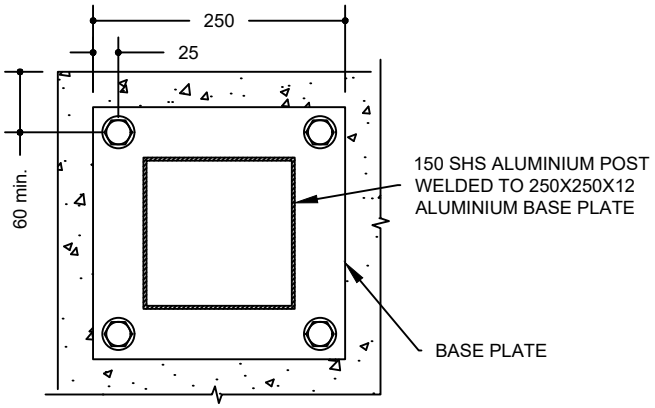

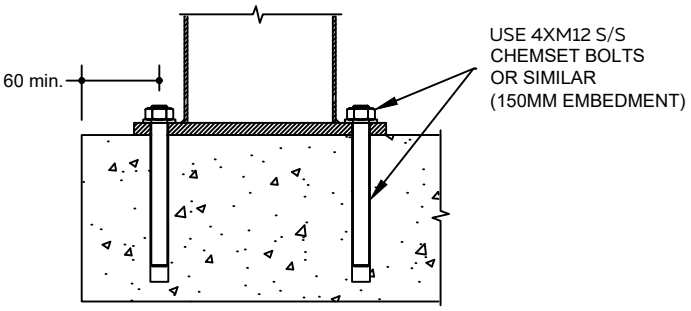

100X100 ALUMINIUM POST BASE PLATE TIMBER SUBSTRATE

	Embedment			
Type	100x3 SHS	100x4 SHS	100x5 SHS	150x3 SHS
Coach	120	265	190	265
Spax	120	260	190	260

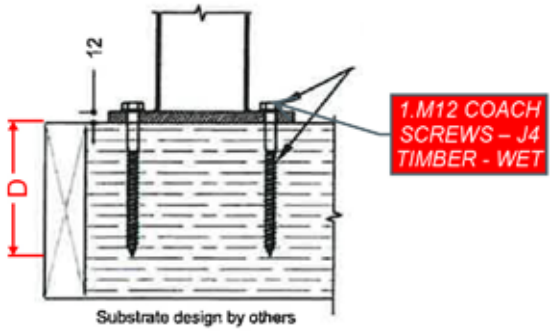

150X150 ALUMINIUM POST BASE PLATE TIMBER SUBSTRATE

	Embedment			
Type	100x3 SHS	100x4 SHS	100x5 SHS	150x3 SHS
Coach	120	265	190	265
Spax	120	260	190	260

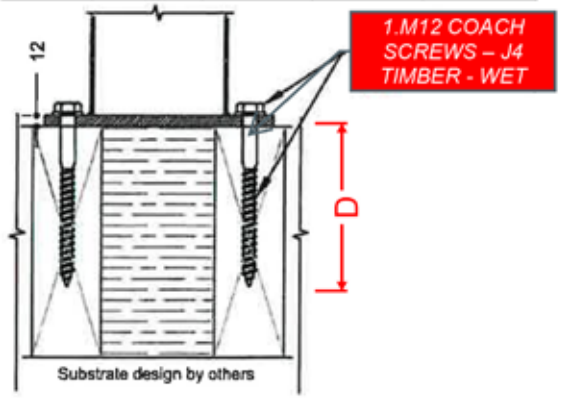

NOTE: ALL POST TO BASE PLATE WELDS MUST BE FULL PENETRATION BUTT WELDS ALL AROUND

LouvreTec®

©Louvretec 2025 – All Rights Reserved. Technical specifications subject to change without notice.

STUDIO89 LTD
CONSULTING ENGINEERS

SNOW LOADINGS. AS REQUIRED BY NZS3604:2011 (SECTION 15)

Where a louvre roof forms part of a lower roof meeting an upper wall and the exposed height of the upper wall is greater than 0.6mm, the roof is defined as an abutting roof (similar to NZS3604:2011 15.3). In this situation, the louvre spans and beam spans determined from the Louvretec Tables shall be multiplied by 0.8.

FIGURE 9

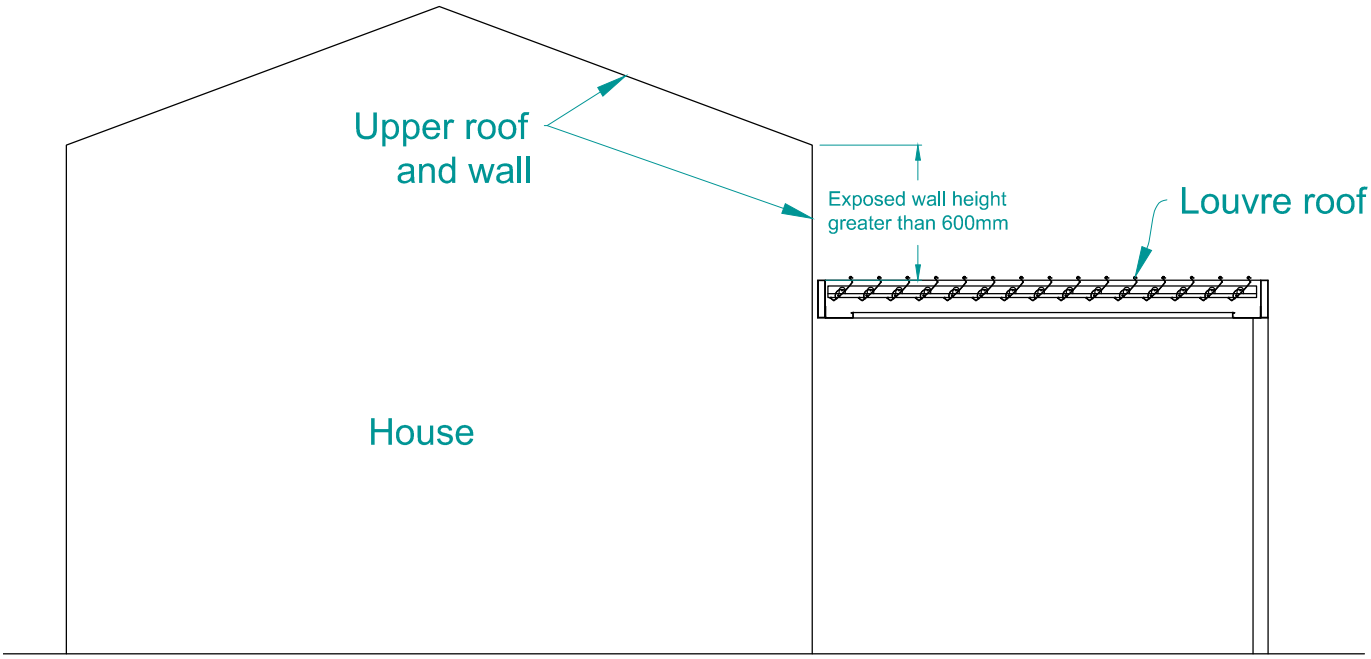

STANDARDS NZ 1.5 AND 2.5 kPa SNOW LOADING ZONES NZS 3604:2011

For information about snow zones in New Zealand please see Figure 15.1 from NZS 3604:2011 Timber Framed Buildings. Wind speeds and snow loads must always be considered together. The lesser span taking precedence.

OPENING OR RETRACT ROOF BLADE

*For larger spans, typically alpine and coastal locations

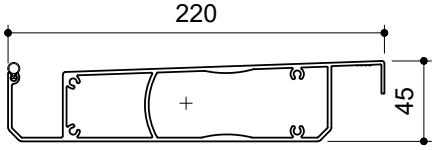

Louvretec 220/45 opening alpine* roof
(retract compatible)

SNOW LOAD	LOUVRE ROOF SPANS (mm)	
	1kPa	5000
	1.5kPa	5000
	2kPa	5000
	3kPa	4200
	3.3kPa	4000

©Louvretec 2025 – All Rights Reserved. Technical specifications subject to change without notice.

SECTION 15 1.5 AND 2.0 kPA SNOW LOADING NZS3604.2011

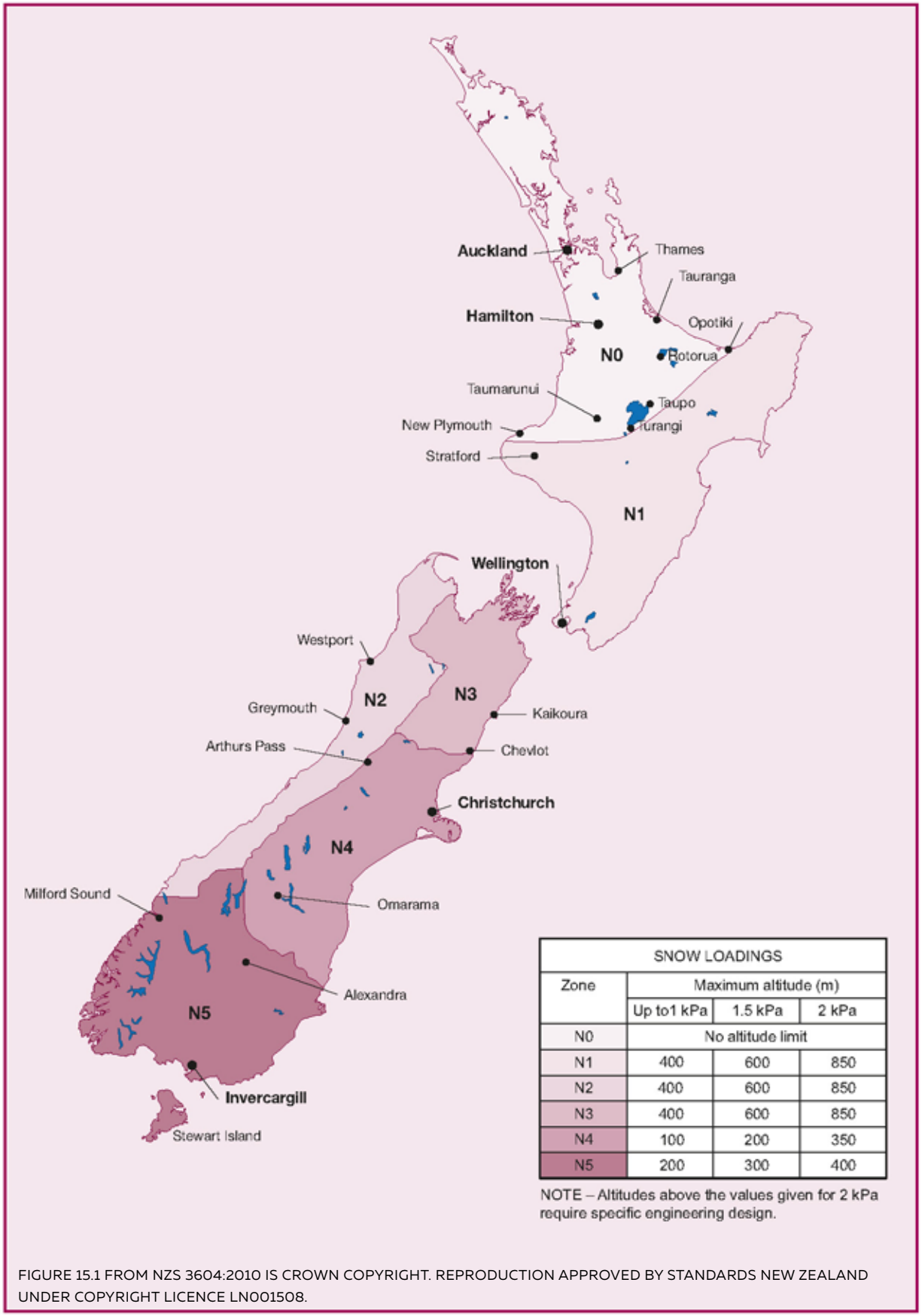

SNOW LOADINGS			
Zone	Maximum altitude (m)		
	Up to1 kPa	1.5 kPa	2 kPa
N0	No altitude limit		
N1	400	600	850
N2	400	600	850
N3	400	600	850
N4	100	200	350
N5	200	300	400

NOTE – Altitudes above the values given for 2 kPa require specific engineering design.

FIGURE 15.1 FROM NZS 3604:2010 IS CROWN COPYRIGHT. REPRODUCTION APPROVED BY STANDARDS NEW ZEALAND UNDER COPYRIGHT LICENCE LN001508.

©Louvretec 2025 – All Rights Reserved. Technical specifications subject to change without notice.

