opening roofs

By Louvretec

Gallery	2.04 - 2.05
Product range	2.06 - 2.07
Drive systems options & details	2.08
Motor Location & Clearances	2.09
Blade Direction	2.10
Louvretec Structural Frame	2.11 - 2.12
Raking Roofs	2.13
Solar Powered opening roofs	2.14
Opening Roof Blades & Gutter Options	2.15
Box Section Frames, Posts & Flashings	2.16
Remote Control Options	2.17 - 2.18
Louvretec 180 opening slimline roof	2.19 – 2.22
Louvretec 200 opening slimline roof	2.23 - 2.26
Louvretec 220 opening slimline roof	2.27 – 2.30
Louvretec 220/45 opening alpine* roof	2.31 – 2.34
*For larger spans, typically alpine and coastal locations	
Louvretec 200 opening suburban roof	2.35 – 2.38
Louvretec 270 opening translucent roof	2.39 – 2.42
Warranty	2.43 - 2.44

©Louvretec 2025 – All Rights Reserved. Technical specifications subject to change without notice.



©Louvretec 2025 – All Rights Reserved. Technical specifications subject to change without notice.



©Louvretec 2025 – All Rights Reserved. Technical specifications subject to change without notice.


1.


2.


3.


4.

1. LOUVRETEC 200 SUBURBAN ROOF 2. LOUVRETEC 270 TRANSLUCENT ROOF 3. LOUVRETEC 220 SLIMLINE ROOF 4. FLOW TO THE OUTDOORS

©Louvretec 2025 – All Rights Reserved. Technical specifications subject to change without notice.



5.



6.



7.



8.

5. OUTDOOR ROOM 6. OPENING ROOF CLOSED 7. POOLSIDE COMFORT 8. URBN SURF PARK, SYDNEY OLYMPIC PARK

©Louvretec 2025 – All Rights Reserved. Technical specifications subject to change without notice.

ALL NEW

INTRODUCING LOUVRETEC SLIMLINE OPENING ROOFS

Already award-winning!

Louvretec's fresh range of Opening Roofs incorporates slimline design with "Cushion Closing" functionality.

Louvretec's latest louvre roof range, developed for both Spiral Pivoting Opening Roofs and Retract Roofs, suits everything from large multi-roof projects to cosy outdoor living areas, in residential homes and commercial buildings.

Louvretec Australia has won the Product Innovation Award at the inaugural Window Shading Association of Australia (WSAA) Industry Awards 2026. Our winning entry, "One Louvre Blade, Two Patio Roof Systems," showcased the Louvretec 220/45 opening alpine* roof blade, a single louvre profile that works across both the Spiral Pivot and Retract Roof systems.

Louvretec slimline roof key features

Available in four sizes;·

- Louvretec 180 opening slimline roof (Spiral Pivot only)
- Louvretec 200 opening slimline roof (Spiral Pivot only)
- Louvretec 220 opening slimline roof
  (Spiral Pivot & Retract Compatible)
- Louvretec 220/45 opening alpine* roof
  *For larger spans, typically alpine and coastal locations
  (Spiral Pivot & Retract Compatible)

Completing the range

- Louvretec 200 opening suburban roof; designed with quality and economy in mind.
- Louvretec 270 opening translucent roof; incorporating a translucent panel, ideal for use when loss of light is an issue.
- Louvretec opening roofs can be incorporated as p… home or building, or free-standing.

Proudly NZ & Australian designed and manufactured

All jointly designed, manufactured and distributed worldwide by; Louvretec NZ Ltd & Louvretec Australia Pty Ltd.



OPEN UP YOUR HOME

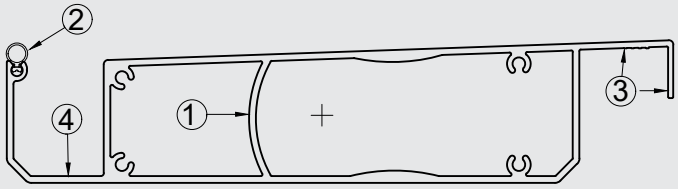

Louvretec 220/45 opening alpine* roof
(Spiral Pivot & Retract Roof compatible)

Sleek, functional design, clean and uncluttered when open or closed. Somfy powered or hand-operated award winning Spiral Pivot operating system. *For larger spans, typically alpine and coastal locations. We're also proud to announce, this versatile louvre won the Window Shading Association of Australia Product Innovation Award, 2026.

1. Design strength of an extruded double box section
2. "Cushion Closing" onto a bulb seal strip
3. Increased closing cover angle for added weather protection
4. Larger blade gutter incorporated for extra storm-water dispersal

©Louvretec 2025 – All Rights Reserved. Technical specifications subject to change without notice
Revision to this page: 19/10/2026

MINIMUM - MAXIMUM BLADE SPANS AT A GLANCE AS DETERMINED BY WIND SPEED. REFER TO SECTION 13 ENGINEERING REPORTS FOR FULL DETAILS ON BLADE SPANS.

EXTRA HIGH WIND SPEED 198KM/H 55M/S

LOW WIND SPEED 115KM/H 32M/S

THE LOUVRETEC RANGE OF OPENING ROOFS

Award Winning Spiral Pivot System Opening Roofs & Retract Compatible Roofs

Spiral Pivot Opening Roofs pivot blades open & closed

louvretec retract — ADI Retract Technology

Retract Roofs pivot open & closed and also Retract back!

Louvretec Spiral Pivot Roofs are also available as a Solar Powered Option.

TYPE/COLLECTION	LOUVRE BLADE STYLE	DRIVE SYSTEM	MAXIMUM SPANS
slimline opening roofs	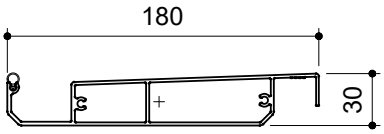 **Louvretec 180 opening slimline roof**	Spiral Pivot	2850MM EX HIGH 4000MM LOW
	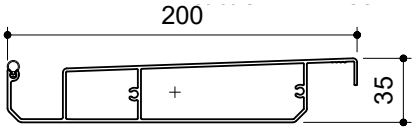 **Louvretec 200 opening slimline roof**	Spiral Pivot	4000MM EX HIGH 4500MM LOW
	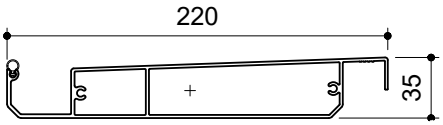 **Louvretec 220 opening slimline roof** (also retract roof compatible)	Spiral Pivot / Retract	3500MM EX HIGH 4300MM LOW
	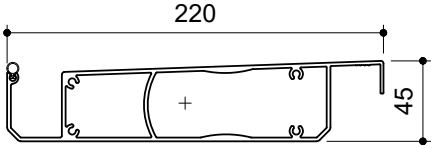 **Louvretec 220/45 opening alpine* roof** (also retract roof compatible) *For larger spans, typically alpine and coastal locations	Spiral Pivot / Retract	5000MM EX HIGH 5000MM LOW
suburban opening roof	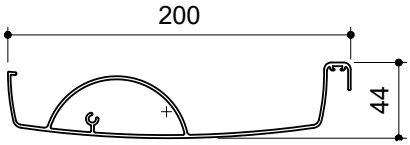 **Louvretec 200 opening suburban roof**	Spiral Pivot	3300MM EX HIGH 4500MM LOW
translucent opening roof	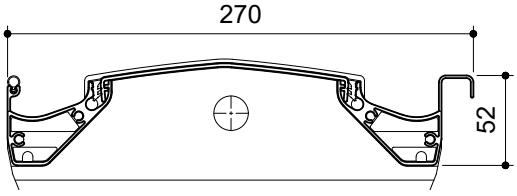 **Louvretec 270 opening translucent roof**	Spiral Pivot	3250MM EX HIGH 4500MM LOW

©Louvretec 2025 - All Rights Reserved. Technical specifications subject to change without notice.
Revision to this page: 19/10/2026

DRIVE SYSTEMS

Spiral Pivot - four variants

Hidden away, the award winning Spiral Pivot system is the very heart of Louvretec's operating system. Linked to a custom made gear box and driven by Somfy - the world's leading tubular motor manufacturer.

1. MOTOR OVER SPIRAL PIVOT

This tried and tested system has been well proven over many years and continues to be used as standard on Louvretec's 200 opening suburban roof.



MOTOR OVER SPIRAL PIVOT



2. DOWNUNDER SPIRAL PIVOT

With neither operating mechanism nor motor to be seen, Down-under provides for the cleanest look imaginable. Originally designed for Louvretec's new gen slimline roofs, Down-Under is now available on request for all Louvretec Opening Roofs. As the name implies, everything is hidden from sight: not only the pivot operating system, but the motor and gearbox too.

CONTROLLER OPTIONS
Refer Section 2 pages 2.17 - 2.18 for range of options.



DOWNUNDER SPIRAL PIVOT



3. SOLAR POWERED SPIRAL PIVOT

Louvretec now offers a Solar Powered option for all Opening Roofs.



SOLAR POWERED SPIRAL PIVOT



4. HAND OPERATED SPIRAL PIVOT

Using a custom engineered gearbox with stainless steel crank handle, all Louvretec Opening Roofs are available as a hand operable option in lieu of motorised.

The roofs can be operated with ease, with the crank handle being detachable for storage when operation is complete.



HAND OPERATED SPIRAL PIVOT

©Louvretec 2025 – All Rights Reserved. Technical specifications subject to change without notice.

DETAILS AT A GLANCE

Motor location

Ideally locate motor on high side, passive on low side. If due to down-pipe location or power source that the motor must be located on low side it is strongly recommended to use Motor Over option.

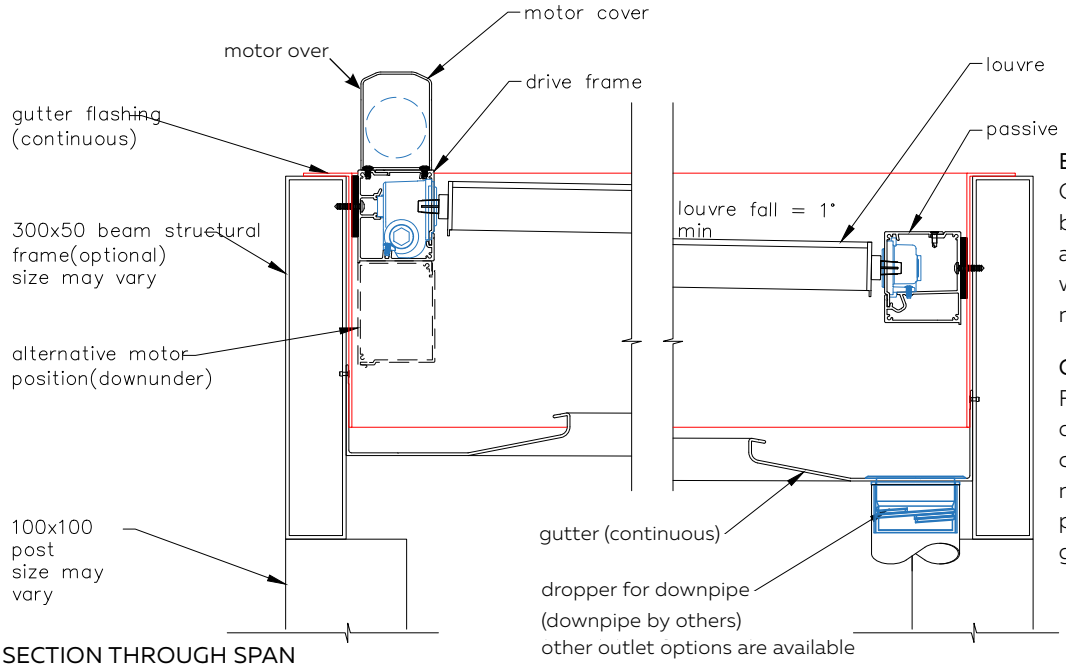

SECTION THROUGH SPAN

BLADE FALL

Opening Roof louvre blades are installed at a minimum pitch of 1° which equals 17mm per metre.

GUTTER FALL

Falls in gutters is determined by location of down-pipe outlet. A minimum fall of 3mm per metre is required for gutters.

IN MOST INSTANCES STRUCTURAL OUTER FRAME IS INSTALLED LEVEL

This allows for ease of other installation options such as Louvre Panels, Slidetec Frameless Glass Sliding Doors or Outdoor Blinds.

Clearance

When fixing under a soffit or overhead obstruction remember to check clearances above drive frame (or passive frame if passive is highest side). Check for motor cover and when opening roof blade is in vertical open position.

As a rule of thumb allow clearance of 100mm for all Opening Roofs excluding the Louvretec 270 opening translucent roof.

For the Louvretec 270 opening translucent roof, allow clearance of 120mm.

Exact clearances are shown on individual spec sheets in this Design Manual.

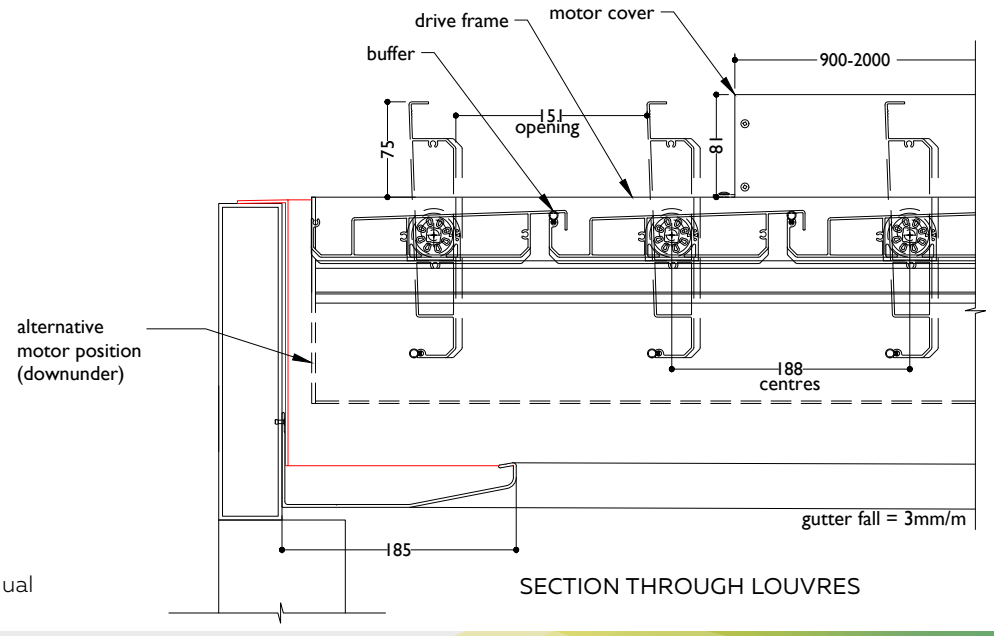

SECTION THROUGH LOUVRES

©Louvretec 2025 - All Rights Reserved. Technical specifications subject to change without notice.

DETAILS AT A GLANCE

Specifying direction of blade pivot

Determine which direction the Louvretec Spiral Pivot system opens the blades. Direction of left hand or right hand up is as viewed **when looking at the motor.**

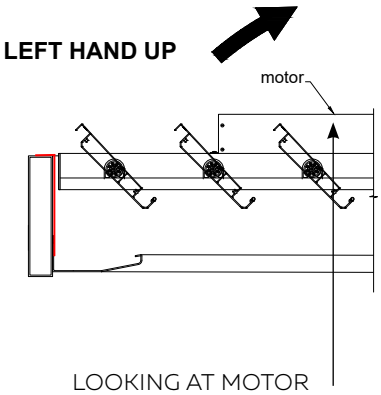

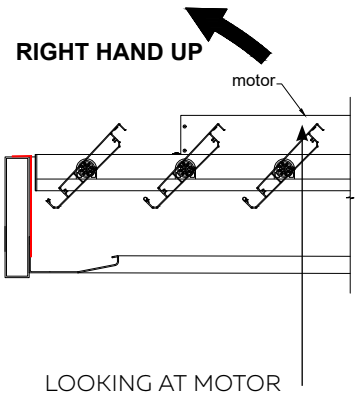



DIFFERENT CONFIGURATIONS

The same rule applies - determine which direction the Louvretec Spiral Pivot system opens the blades. Direction of left hand or right hand up is as viewed **when looking at the motor.**

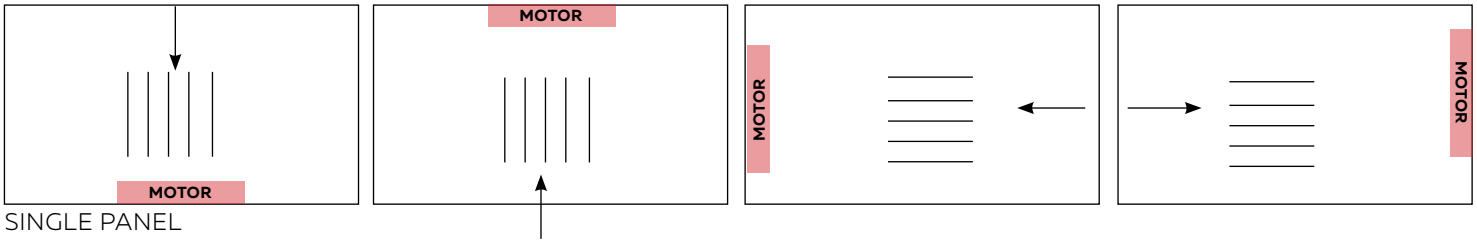

SINGLE PANEL

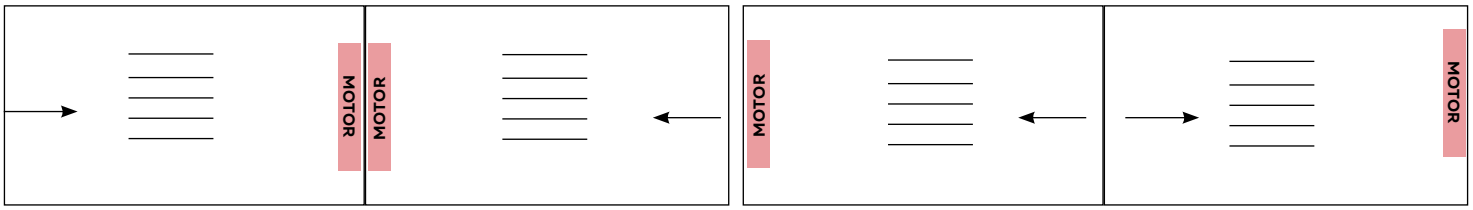

DOUBLE OR MULTIPLE PANELS

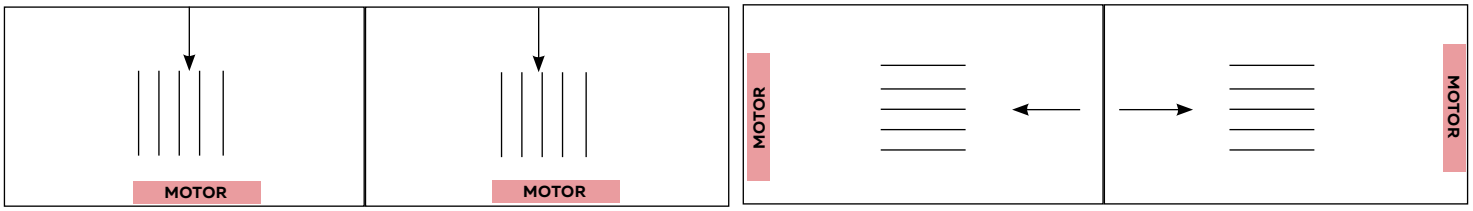

STANDARD OPTION

Motor Over is the Standard Option.

If Downunder is preferred specify as the Option.

ADD ON

Rain sensor available on all motorised Opening roofs - our most requested option.

©Louvretec 2025 – All Rights Reserved. Technical specifications subject to change without notice.



DURABILITY AT ITS BEST

THE LOUVRETEC STRUCTURAL FRAME

Post and Beam sizes determined by wind and loading

Refer to relevant design information for your project;
Section 13 | Engineering/Engineering Reports.

- The post and beam sizes are calculated and determined by wind speeds with loading factors applied to allow for uplift, down pressure and deflection.
- Please refer to Section 13 | Engineering for full engineering and design data.
- For any queries please contact your nearest Louvretec Dealer.



DESIGNED FOR COASTAL LIVING



FREE STANDING OPTION SHOWN



BEAM SIZES

©Louvretec 2025 – All Rights Reserved. Technical specifications subject to change without notice.

THE LOUVRETEC STRUCTURAL FRAME

Engineered aluminium frame for Opening Roofs



- Louvretec offers a fully engineered Structural Aluminium Frame system designed specifically for Opening Roofs and Outdoor Rooms.
- Beams and posts are custom designed to be structurally compliant to the specific wind zone.
- Louvretec Structural Frames provide for clean, aesthetically pleasing lines and with regular cleaning, are virtually maintenance free.
- Louvretec Structural Frames can incorporate wall infills such as Outdoor Blinds, Slidetec Frameless Glass Sliding Doors as well as a range of Louvre Panel infills.
- REFER TO SECTION 4: LOUVRETEC STRUCTRUAL FRAME FOR MORE INFO

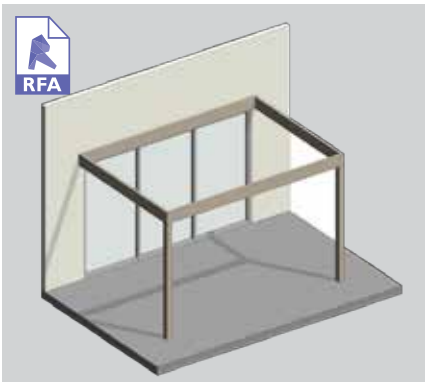

SIMPLY SUPPORTED

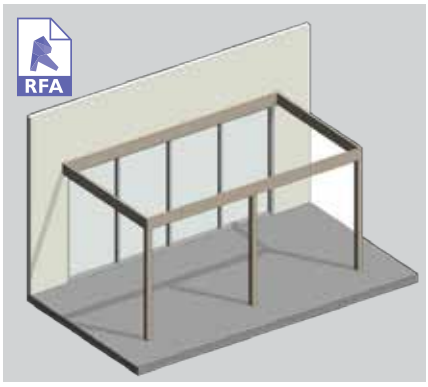

LENGTH EXTENDED - CONTINUOUS SPAN

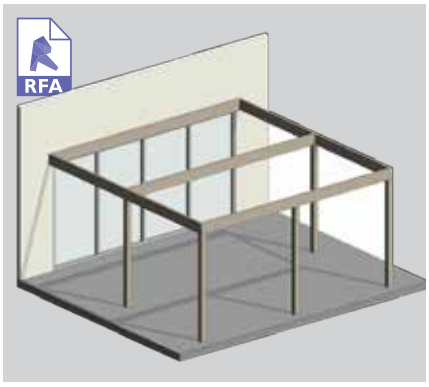

WIDTH EXTENDED

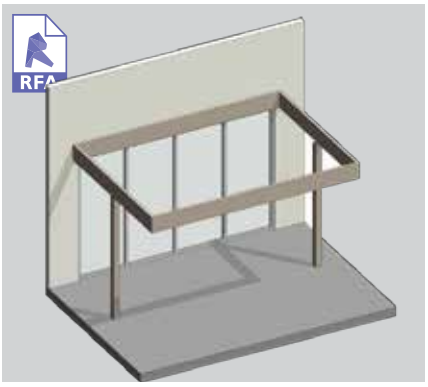

CANTILEVERED FRAME

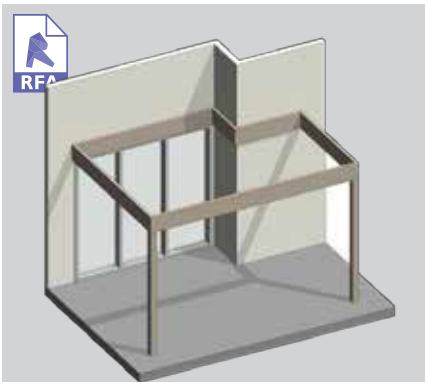

STEPPED FRAME

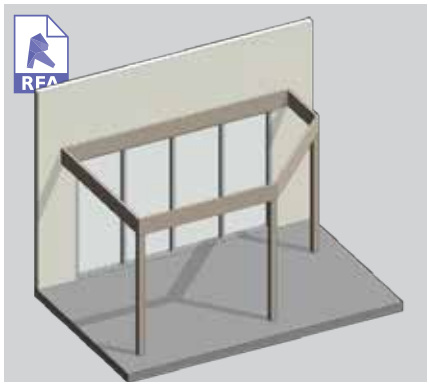

RAKING FRAME



Louvretec 180 opening slimline roof
PG 2.19



Louvretec 200 opening slimline roof
PG 2.23



Louvretec 220 opening slimline roof
(Retract Compatible)
PG 2.27



Louvretec 220/45 opening alpine* roof
*For larger spans, typically alpine and coastal locaitons
(Retract Compatible) PG 2.31



Louvretec 200 suburban opening roof
PG 2.35
& Suburban Solar PG 2.14

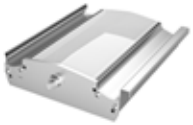

Louvretec 270 opening translucent roof
PG 2.39

©Louvretec 2025 – All Rights Reserved. Technical specifications subject to change without notice.



PLAN VIEW

OPENING ROOFS - RAKING FRAMES

Customised outdoor spaces

No matter the shape, a Louvretec Raking Opening Roof can be designed to fit to any angle up to 45°.

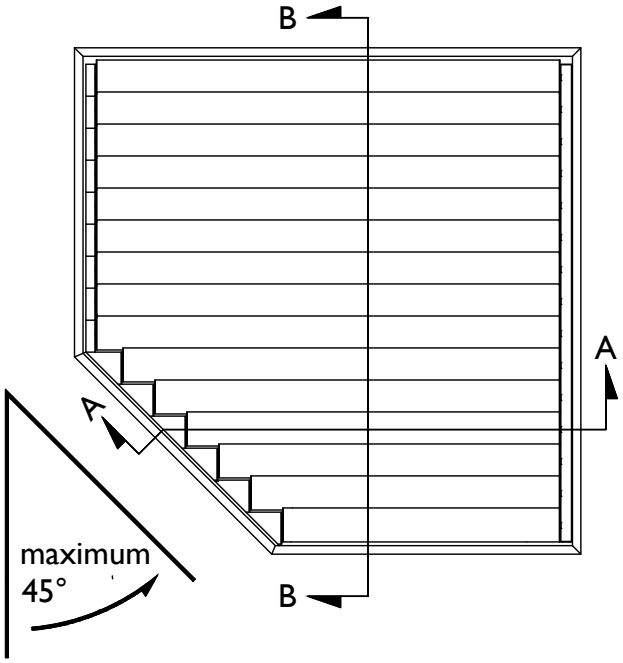



RAKING ROOF

©Louvretec 2025 – All Rights Reserved. Technical specifications subject to change without notice.

OFF THE GRID

Solar Powered Spiral Pivot Opening Roofs
New Technology

LouvreTec Green

Using the very latest solar energy technology, Louvretec introduces our first solar powered Opening Roof option.

No power connection required, the quiet solar powered motor can be controlled by a wireless handheld remote or by a Smart Home solution.

Incorporated within the solar panel is a powerful battery with a 45-day life cycle based on two open/close cycles per day.

Specific algorithms for power management allow for battery charging without direct sunlight.

Innovative, efficient, clean & quiet - presenting Louvretec Solar.



SOLAR POWERED OPENING ROOF



FREESTANDING, SOLAR POWERED OPENING ROOF

©Louvretec 2025 – All Rights Reserved. Technical specifications subject to change without notice.

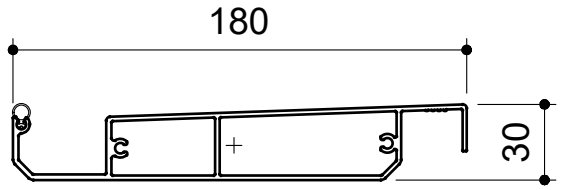

Louvretec 180 opening slimline roof

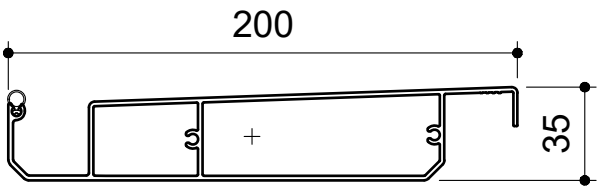

Louvretec 200 opening slimline roof

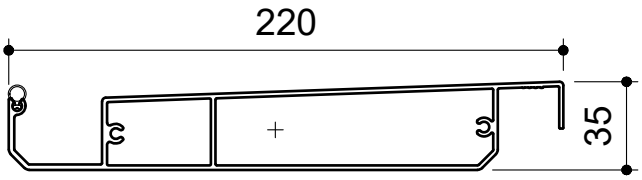

Louvretec 220 opening slimline roof
(Retract compatible)

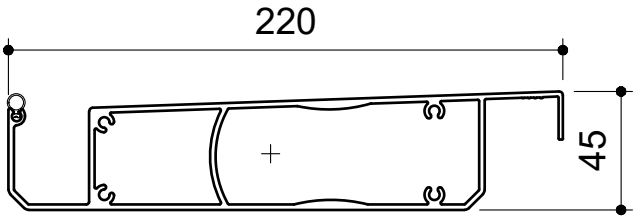

Louvretec 220/45 opening alpine* roof
*For larger spans, typically alpine and coastal locations
(Retract compatible)

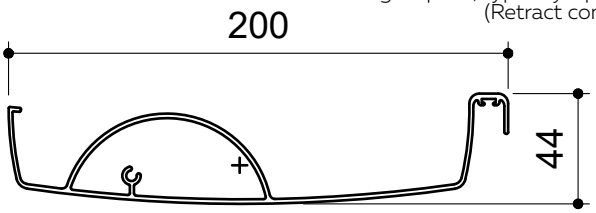

Louvretec 200 opening suburban roof

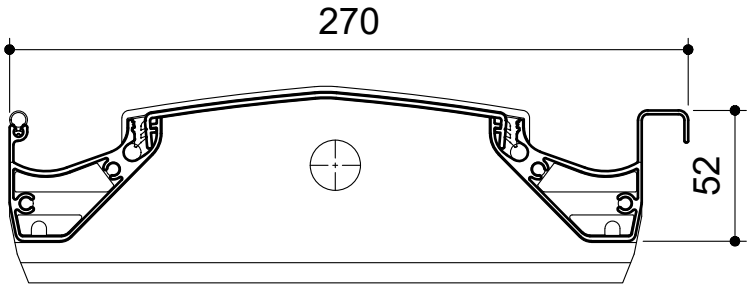

Louvretec 270 opening translucent roof

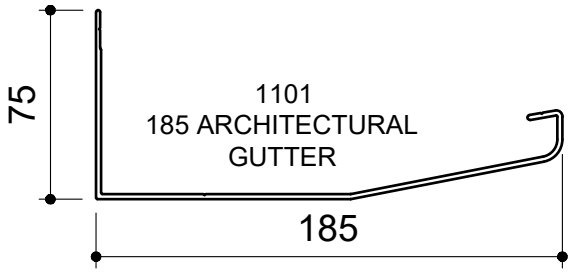

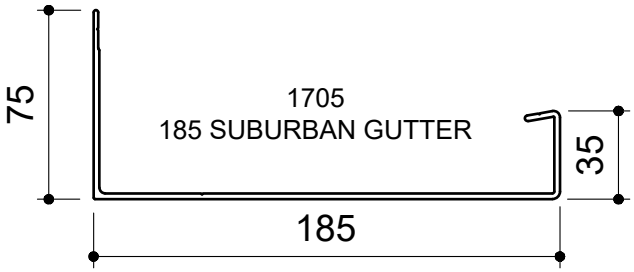

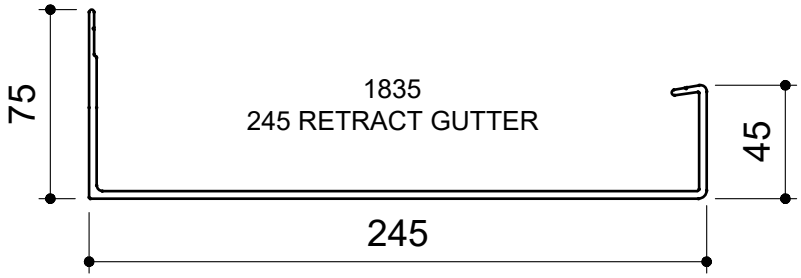

©Louvretec 2025 – All Rights Reserved. Technical specifications subject to change without notice.

TYPICAL DETAIL : LOUVRETEC RANGE OF BOX SECTION FRAMES, POSTS & FLASHING

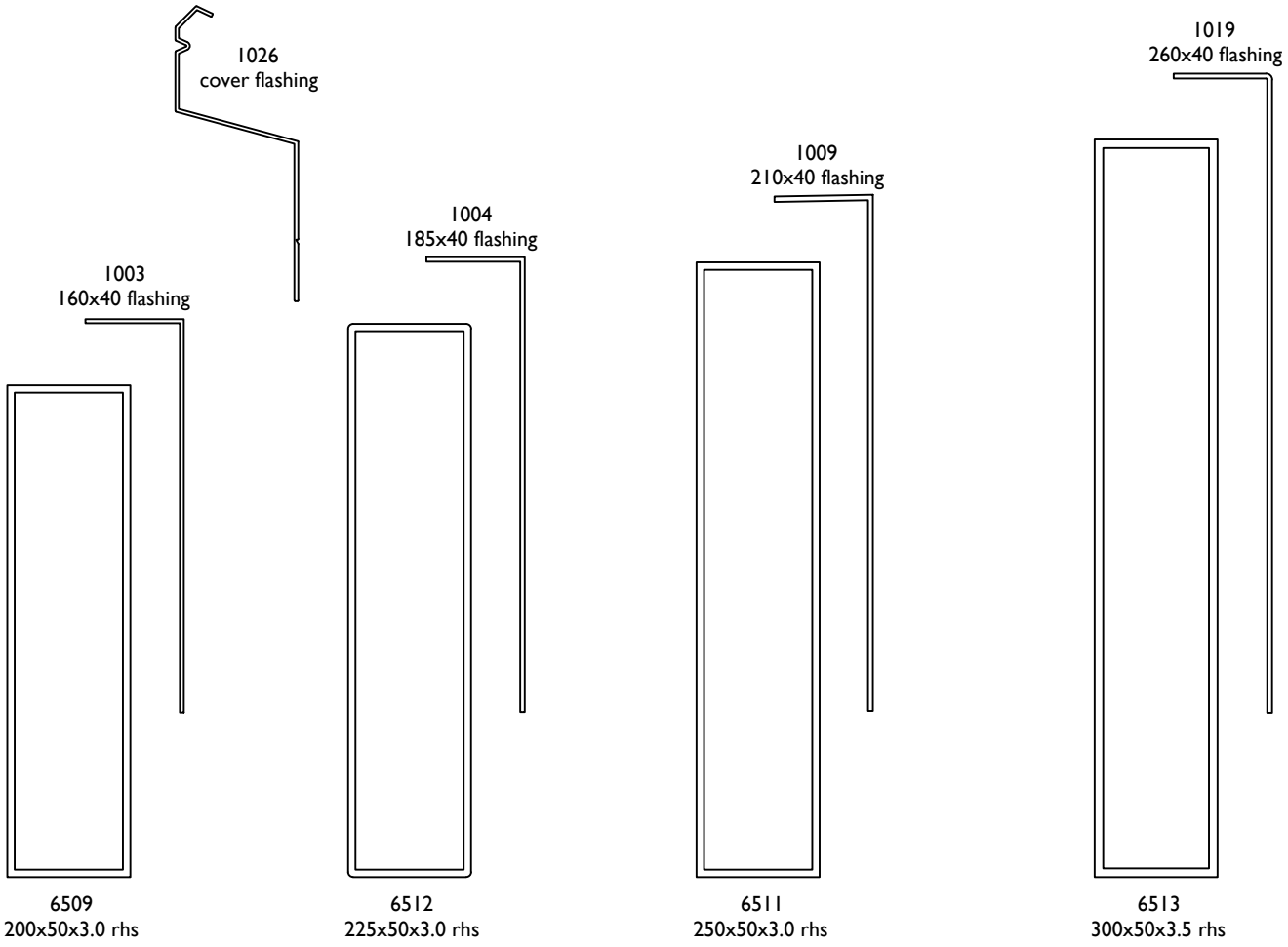



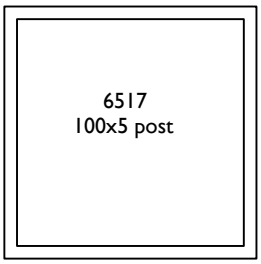

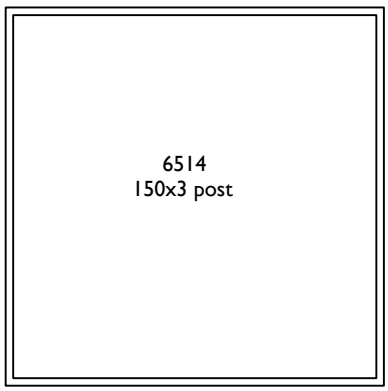

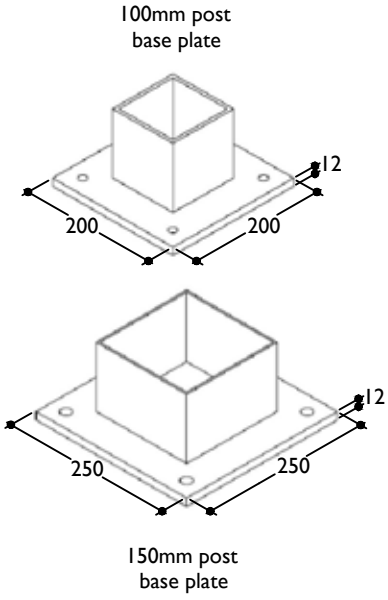

FILE: OPENING ROOFS 2.16 DATE MODIFIED: 01/10/2024 SCALE:

www.louvretec.co.nz www.louvretec.com.au

©Louvretec 2025 – All Rights Reserved. Technical specifications subject to change without notice.

Key: Remote Compatibility

opening roofs — outdoor blinds
louvretec retract — Lighting
sun louvres — Heating

REMOTE CONTROL OPTIONS FOR OPENING ROOFS & OTHER LOUVRETEC MOTORISED PRODUCTS

Remote options

Louvretec's Remote Control options can manage a single Opening Roof or up to 16 Motorised Louvretec products. Remote Control technology is constantly changing and upgrading. Please discuss with your Dealer.

Situo 1 & Smoove 1 Wall Switch

The Situo 1 Remote by Somfy is a one-channel handheld remote using Radio Technology Somfy (RTS).
Smoove is a wireless wall mounted switch providing the same functionality as a remote.
Perfect for controlling a single Opening Roof.



Situo 5 & Smoove 4 Wall Switch

The Situo 5 by Somfy is a five-channel handheld remote using Radio Technology Somfy (RTS). Perfect for controlling a group of motorised Louvretec products (excluding the Retract Roof).
Smoove 4 is a wireless wall switch providing the same functionality as a remote but with 4 channels.
With the addition of the BST11 Bridge, both remotes can control Lighting and Heating.



Telis 16

The Telis 16 is a 16-channel handheld remote using Radio Technology Somfy (RTS). Made to control a larger group of motorised Louvretec products (excluding the Retract Roof).
The addition of a BST 11 Bridge allows this remote to control Lighting & Heating.



Noon Duo

The Noon Duo is a 9-channel handheld remote.
The Noon Duo allows control for Louvretec Retract Roofs, Lighting and Heating.



Daisy App

Daisy is an app by Teleco that allows the control of Louvretec Retract Roofs, Lighting and Heating. Download the free app and install a Daisy Box which communicates with your devices via radio signal.



Solar Powered

No power connection required, the solar powered motor can be controlled by a wireless handheld remote or a Smart Home solution. Battery has a 45-day life cycle based on two open/close cycles/ day. Algorithms for power management allow for battery charging without direct sunlight.



SOLAR POWER OPTION FOR SPIRAL PIVOT OPENING ROOFS

©Louvretec 2025 – All Rights Reserved. Technical specifications subject to change without notice.

REMOTE CONTROL OPTIONS FOR OPENING ROOFS & OTHER LOUVRETEC MOTORISED PRODUCTS

Remote options

Hard Wired Switch options are available for your Motorised Opening Roofs & other Motorised Louvretec products.

Key: Remote Compatibility

opening roofs By Louvretec
outdoor blinds By Louvretec
louvretec retract ADI Retract Technology
Lighting
sun louvres By Louvretec
Heating

Connexoon Connexoon is an app by Somfy that allows the control of Louvretec Opening Roofs from your device. The addition of a BST 11 Bridge also allows control of Louvretec Lighting & Heating. Download the app & install the RTS Box (plugs in to your router & wall socket) which communicates with your devices via signal.	 BST 11 BRIDGE & CONNEXOON APP BY SOMFY
TaHoma Tahoma by Somfy is the central hub that connects and controls the smart home ecosystem. Convenient, intuitive & easy to configure across a wide range of smart home systems.	 TAHOMA CENTRAL HUB
BMS A Building Management System (BMS) is a pad from which you can manage a home's shading, heating, cooling, ventilation & lighting controls. Louvretec Opening Roofs can be integrated into a home or building's BMS. Retract Roof, Heating & Lighting can be integrated via an RS232 Transmitter.	  BUILDING MANAGEMENT SYSTEM (BMS)
Hard Wired Switch A Somfy Hard Wired Switch provides control of a motorised Opening Roof via a 230v wall switch wired directly to the motor.	 SOMFY SWITCH FOR AN OPENING ROOF
Wall Mounted Remote A Teleco Wall Mounted Remote provides control of a single Retract Roof, LED Lights, or a Dimmable Heater.	 TELECO WALL MOUNTED REMOTE FOR A RETRACT ROOF

RAIN SENSOR OPTION

Teleco Wired Rain102H

The Rain102H by Teleco Rain Sensor can be programmed to automatically close the Louvres & includes integrated heating function for preventing false activation in case of ice and snow.


TELECO RAIN SENSOR

©Louvretec 2025 – All Rights Reserved. Technical specifications subject to change without notice.





PURPOSE BUILT OUTDOOR LIVING AREA
BY LOUVRETEC AUCKLAND

Louvretec 180 opening slimline* roof

**Sleek and compact. The smallest Roof in the slimline series*

Compact. Capable. Mighty

The modern slimline design works so well with the narrower 180mm wide louvre blade, and is an ideal choice for smaller spanning Opening Roofs.

Key Features

- Each blade top tapers to a height of 30mm
- Sleek, functional design, clean and uncluttered when open or closed
- Design strength of an extruded double box-section
- Available Motorised using Somfy Motorisation, or hand-operated
- Features our award winning Spiral Pivot drive system, keeping mechanisms hidden
- "Cushion Closing" onto a bulb seal strip
- Increased closing cover angle for added weather protection
- Larger blade gutter incorporated for extra storm-water dispersal
- This Roof replaces the original 180 Classic and 180 Linear Opening Roofs



Louvretec 180 opening slimline roof `blade



Louvretec 180
opening slimline roof
BLADES CLOSED



Louvretec 180
opening slimline roof
BLADES OPENING

MOTORISED OR HAND OPERATED
Controller and
Sensor Options
Refer Pages
2.17 - 2.18
for range of options





SURFACE FINISHING OPTIONS
A wide range of options are available.

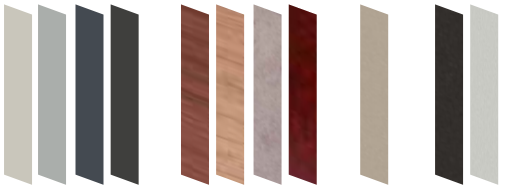

POWDERCOAT | WOODGRAIN & SPECIAL FINISHES | METALLIC | ANODISED

©Louvretec 2025 - All Rights Reserved. Technical specifications subject to change without notice.



BLADE SPECIFICATIONS Louvretec 180 opening slimline roof blade

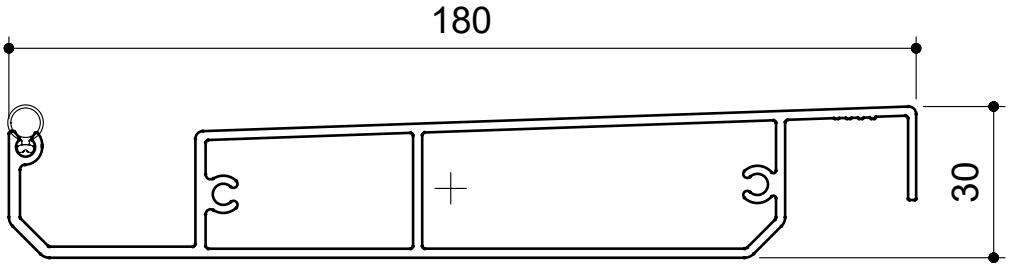

NTS

BLADE SPECIFICATIONS			
Blade cover - opening system	169 mm	Weight per linear metre - opening system	1.93 kg/lm
Weight per square metre - opening system	11.41 kg/sqm	Actual blade width	180 mm
Blade centres - opening system	169 mm		

SPANS AT A GLANCE

Refer Engineering Section. Climate, terrain, shielding, location, type of structure contribute to determine spans.

WIND ZONE	INSIDE	LOW	MEDIUM	HIGH	VERY HIGH	EXTRA HIGH
Factored wind speed at building	Self wt	32 m/s	37m/s	44 m/s	50 m/s	55 m/s
		115 km/hr	133 km/hr	158 km/hr	179 km/hr	198 km/hr
Louvretec 180 opening slimline roof **3m Height**	4500	4000	4000	3750	3200	2850
Louvretec 180 opening slimline roof **6m Height**		4000	4000	3300	2800	2500

INSTALLATION OPTIONS

CALCULATE OPTIMUM FRAME OPENING SIZES FOR SPIRAL PIVOT

Span: Check engineering span limits

Pivot: Calculation example showing 17 blades

STEP 1

16 blades x 169 Crs	2704
1 blade at 180 (blade size)	+ 180
17 blades	=2884

STEP 2

Blade cover	2884
+2/22mm clearance @ ends	=44
Total exact pivot length	=2928

Extra width 185mm gutter provides cover if clearance increases over 22mm at ends.

Blade direction either Right Hand up or Left Hand up.

CHOOSE DIRECTION OF BLADE PIVOT

LEFT HAND UP

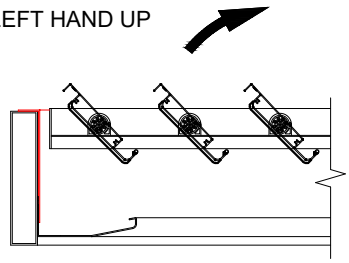

RIGHT HAND UP

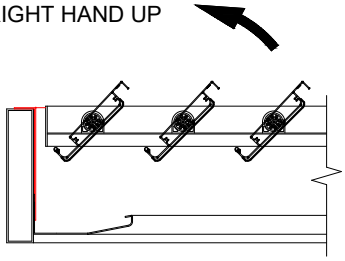

©Louvretec 2025 – All Rights Reserved. Technical specifications subject to change without notice.
Revision to this page: 20/10/2026

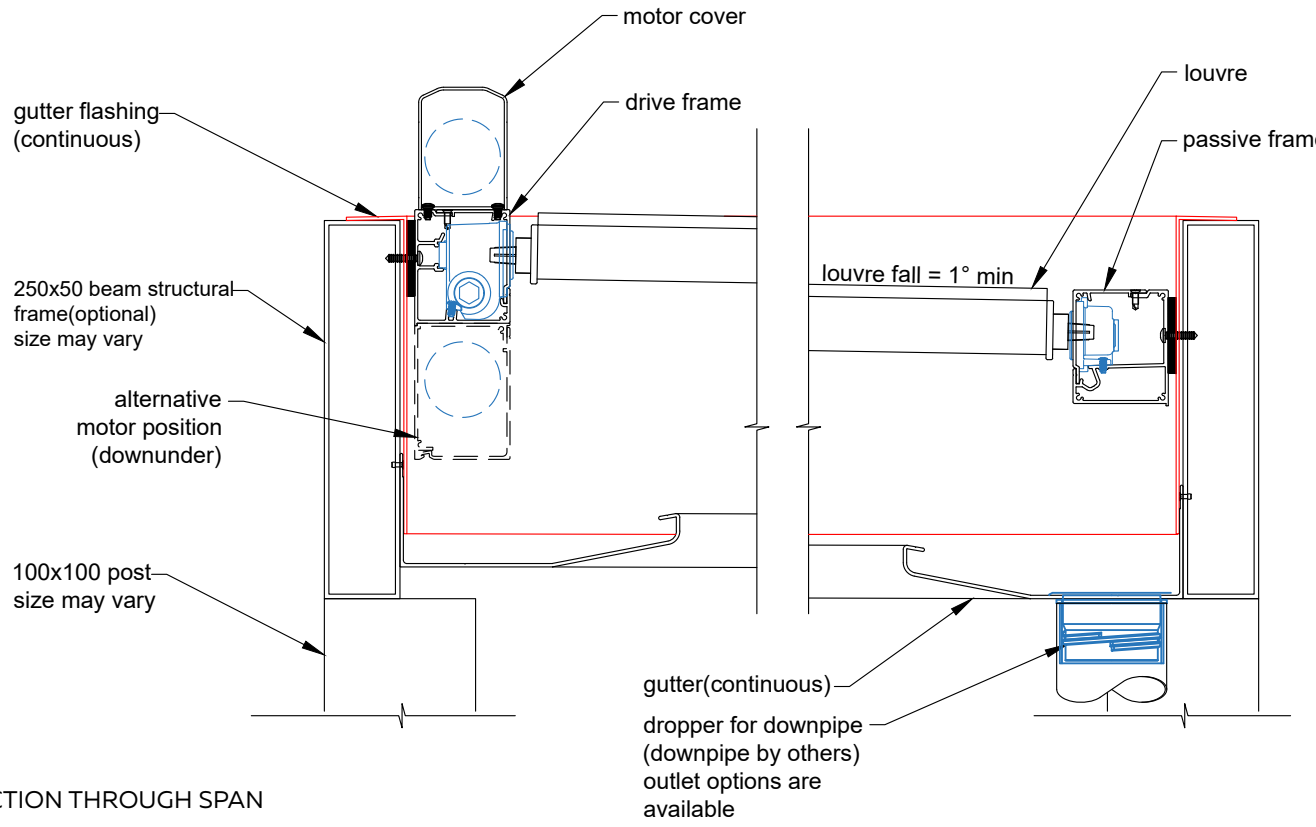

SECTION THROUGH SPAN

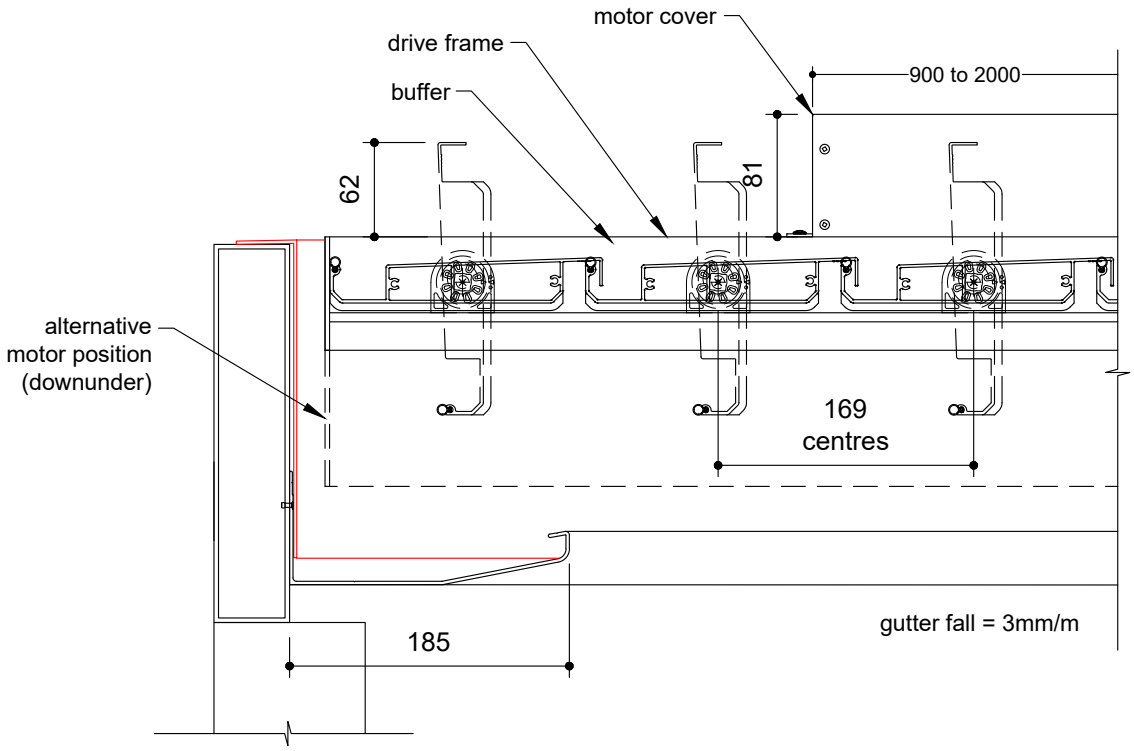

SECTION THROUGH LOUVRES

©Louvretec 2025 – All Rights Reserved. Technical specifications subject to change without notice.

TYPICAL DETAIL : Manual Louvretec 180 opening slimline roof within Louvretec structural frame

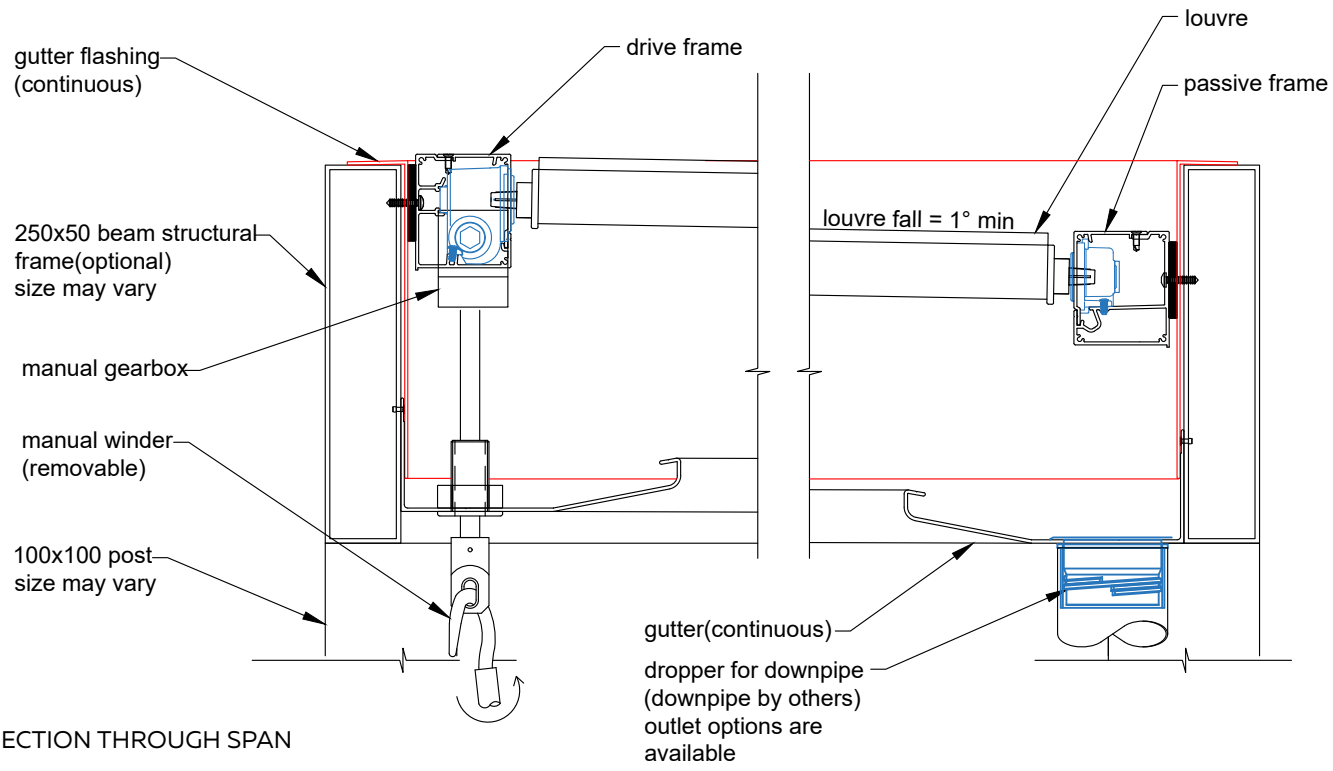

SECTION THROUGH SPAN

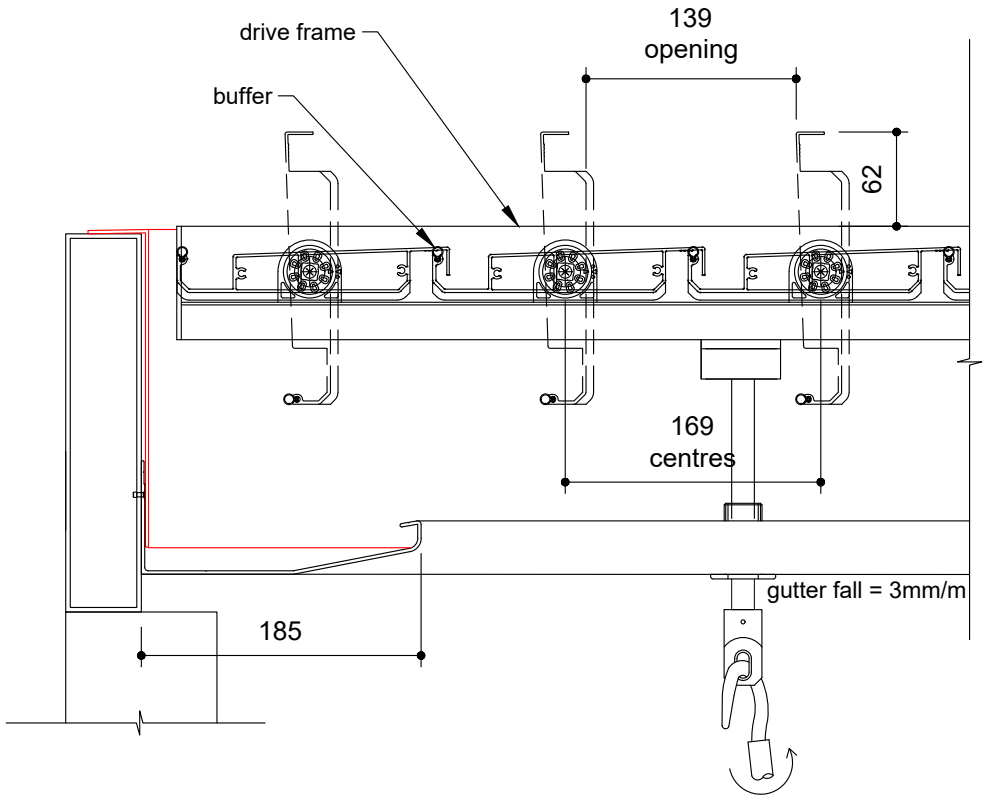

SECTION THROUGH LOUVRES

FILE: OPENING ROOFS 2.22 DATE MODIFIED: 01/10/2026 SCALE:

www.louvretec.co.nz www.louvretec.com.au

©Louvretec 2025 - All Rights Reserved. Technical specifications subject to change without notice.





CONTROLLABLE OUTDOOR LIVING SPACE CREATION. BY LOUVRETEC AUCKLAND

Louvretec 200 **opening slimline*** **roof**

**An ideal all-rounder option. Each blade top-tapers to 35mm high*

A Handy 200mm wide Opening Roof Louvre Blade

Since its release, the Louvretec 200 opening slimline roof is a popular option that features a 200mm wide design.

The sleek, clean modern design provides excellent spanning capacity for the majority of residential installations.

Key Features

- Each blade is 35mm high at it's highest point
- Sleek, functional design, clean and uncluttered when open or closed
- Design strength of an extruded double box-section
- Available Motorised using Somfy Motorisation, or hand-operated
- Features our award winning Spiral Pivot drive system, keeping mechanisms hidden
- "Cushion Closing" onto an external sun-resistant PVC bulb seal
- Increased closing cover angle for added weather protection
- Larger blade gutter incorporated for extra stormwater dispersal



Louvretec 200 opening slimline roof `blade



Louvretec 200 opening slimline roof BLADES CLOSED



Louvretec 200 opening slimline roof BLADES OPENING

MOTORISED OR HAND OPERATED

Controller and Sensor Options Refer Pages 2.17 - 2.18 for range of options





SURFACE FINISHING OPTIONS

A wide range of options are available.

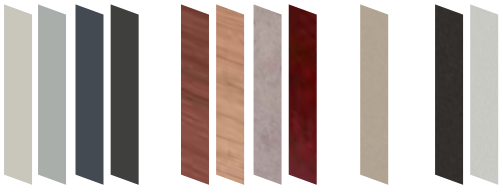

POWDERCOAT | WOODGRAIN & SPECIAL FINISHES | METALLIC | ANODISED

©Louvretec 2025 - All Rights Reserved. Technical specifications subject to change without notice.



BLADE SPECIFICATIONS Louvretec 200 opening slimline roof blade

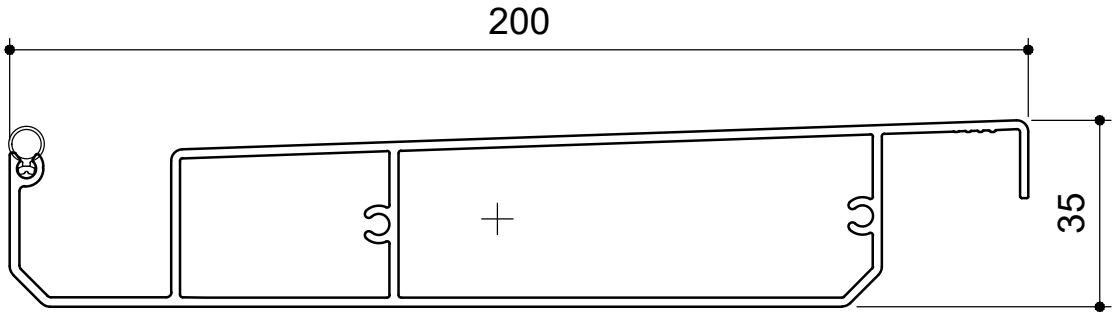

NTS

BLADE SPECIFICATIONS			
Blade cover - opening system	188 mm	Weight per linear metre - opening system	2.431 kg/lm
Weight per square metre - opening system	12.9 kg/sqm	Actual blade width	200 mm
Blade centres - opening system	188 mm		

SPANS AT A GLANCE

Refer Engineering Section. Climate, terrain, shielding, location, type of structure contribute to determine spans.

WIND ZONE	INSIDE	LOW	MEDIUM	HIGH	VERY HIGH	EXTRA HIGH
Factored wind speed at building	Self wt	32 m/s	37m/s	44 m/s	50 m/s	55 m/s
		115km/hr	133 km/hr	158 km/hr	179 km/hr	198 km/hr
Louvretec 200 opening slimline roof **3m Height**	4500	4500	4500	4500	4300	4000
Louvretec 200 opening slimline roof **6m Height**		4500	4500	4400	4000	3800

INSTALLATION OPTIONS

CALCULATE OPTIMUM FRAME OPENING SIZES FOR SPIRAL PIVOT

Span: Check engineering span limits

Pivot: Calculation example showing 17 blades

STEP 1

16 blades x 188 Crs	3008
1 blade at 200 (blade size)	+ 200
17 blades	=3208

STEP 2

Blade cover	3208
+2/22mm clearance @ ends	+ 44
Total exact pivot length	= 3252

Extra width 185mm gutter provides cover if clearance increases over 22mm at ends.

Blade direction either Right Hand up or Left Hand up.

CHOOSE DIRECTION OF BLADE PIVOT

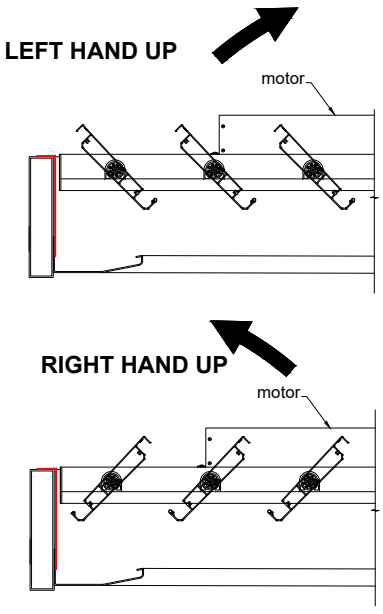

©Louvretec 2025 – All Rights Reserved. Technical specifications subject to change without notice.

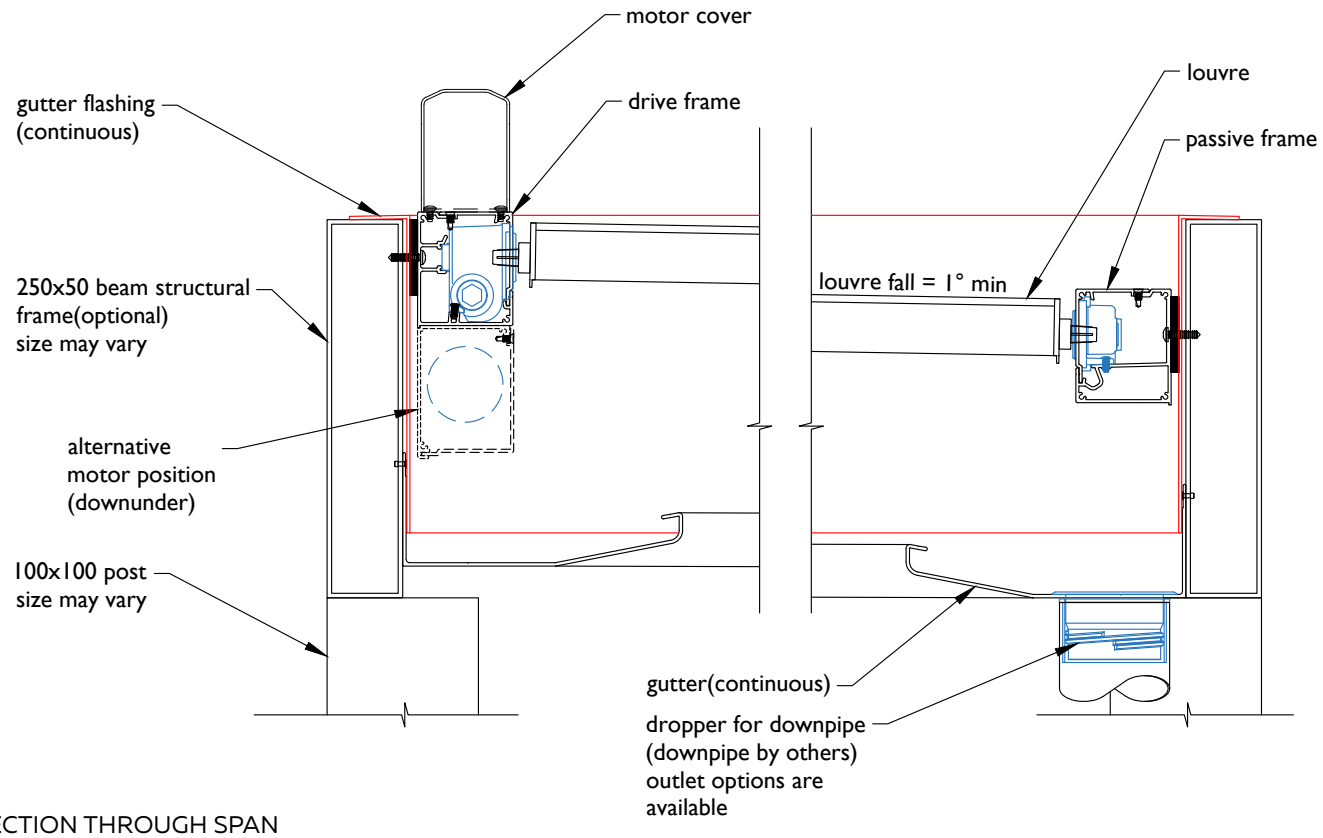

SECTION THROUGH SPAN

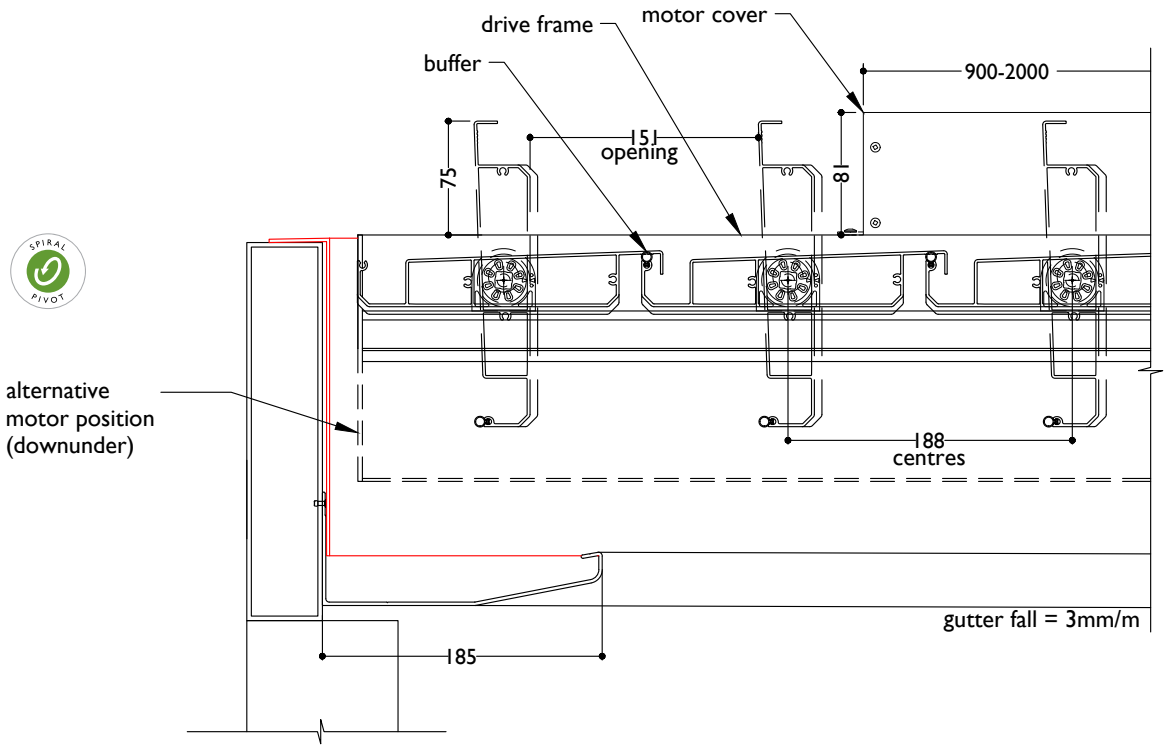

SECTION THROUGH LOUVRES

©Louvretec 2025 – All Rights Reserved. Technical specifications subject to change without notice.

TYPICAL DETAIL : Manual Louvretec 200 opening slimline roof within Louvretec structural frame

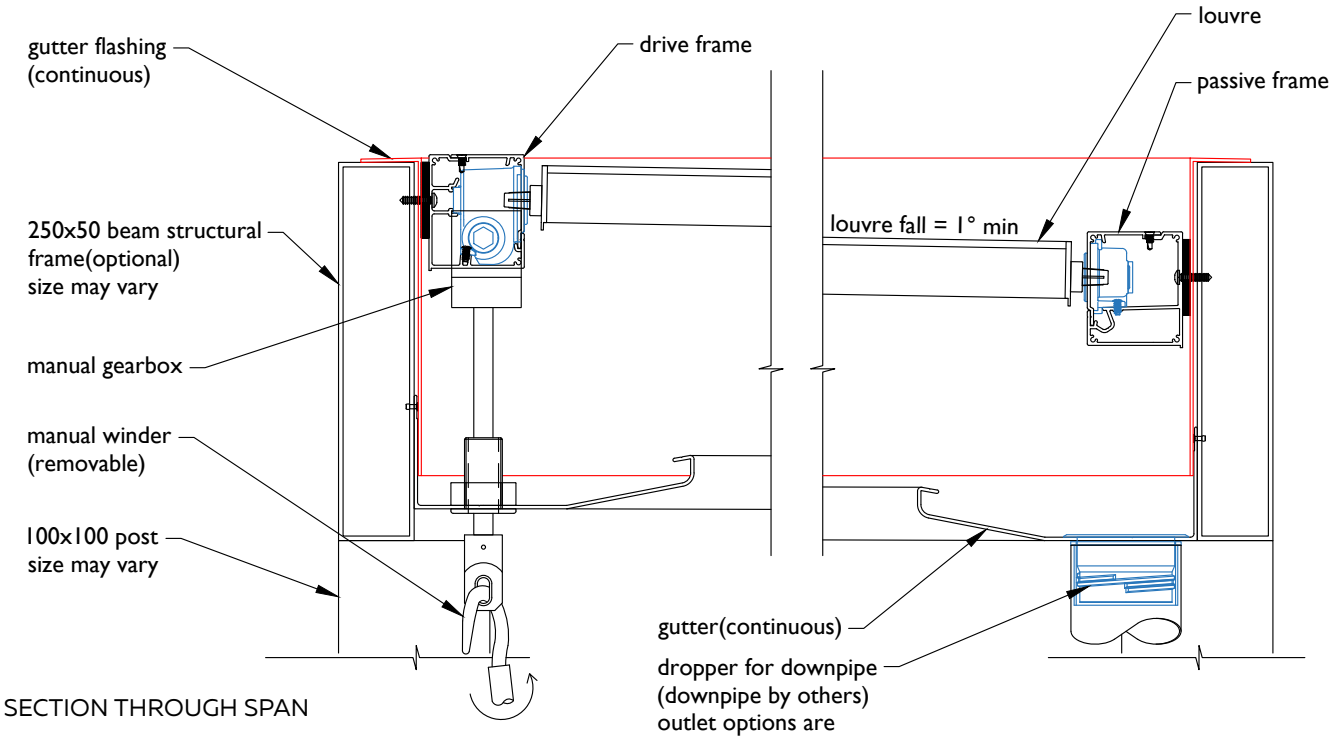

SECTION THROUGH SPAN

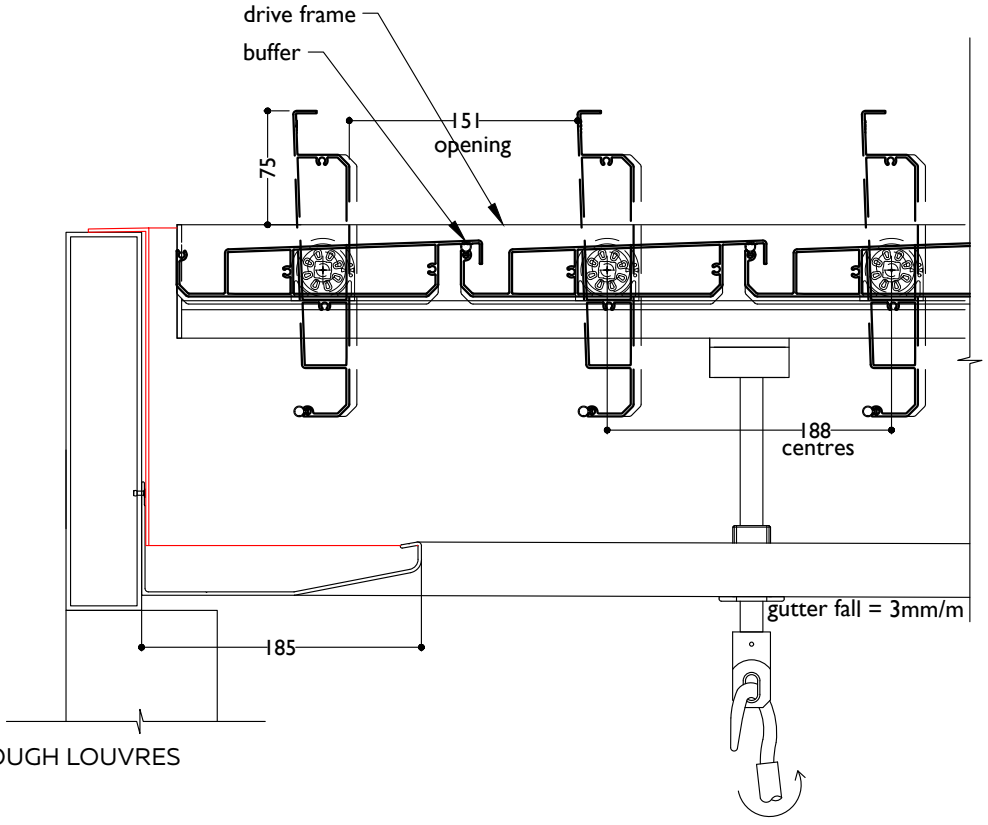

SECTION THROUGH LOUVRES

FILE: OPENING ROOFS 2.26 DATE MODIFIED: 01/10/2026 SCALE:

www.louvretec.co.nz www.louvretec.com.au

©Louvretec 2025 - All Rights Reserved. Technical specifications subject to change without notice.





EXTEND & ENJOY OUTDOOR LIVING.
BY LOUVRETEC SYDNEY NORTH

Louvretec 220 opening slimline* roof

**Each blade top-tapers to 35mm high. Retract Roof compatible.*

A Multi-purpose Louvre blade compatible as a Spiral Pivot or Retract Roof.

Perfect for most Installations

The multi-purpose Louvretec 220 opening slimline roof is one of our most specified roofs, due to it's versatility. This louvre blade is compatible as a Spiral Pivot Opening Roof, as well as a Retract Roof, with excellent spanning capabilities.

Key Features

- Sleek, functional design, clean and uncluttered when open or closed
- Design strength of an extruded double box-section
- Blade is compatible as a Spiral Pivot or Retract Roof
- Available motorised using Somfy Motorisation, or hand-operated
- Award winning Spiral Pivot drive system, keeps mechanisms hidden
- "Cushion Closing" onto an external sun-resistant PVC bulb seal
- Increased closing cover angle for added weather protection
- Larger blade gutter incorporated for extra stormwater dispersal



Louvretec 220 opening slimline roof blade

Available Spiral Pivot or Retract

SPIRAL PIVOT

RETRACT



Louvretec 220
opening slimline roof
BLADES CLOSED



Louvretec 220
opening slimline roof
BLADES OPENING

MOTORISED OR HAND OPERATED

Controller and
Sensor Options
Refer Pages
2.17 - 2.18
for range of options





SURFACE FINISHING OPTIONS

A wide range of options are available.

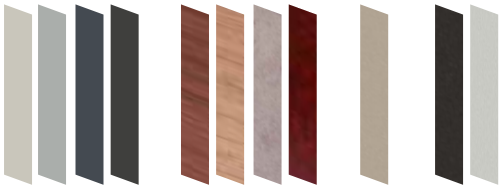

POWDERCOAT | WOODGRAIN & SPECIAL FINISHES | METALLIC | ANODISED

©Louvretec 2025 - All Rights Reserved. Technical specifications subject to change without notice.



BLADE SPECIFICATIONS Louvretec 220 opening slimline roof blade (Retract compatible)

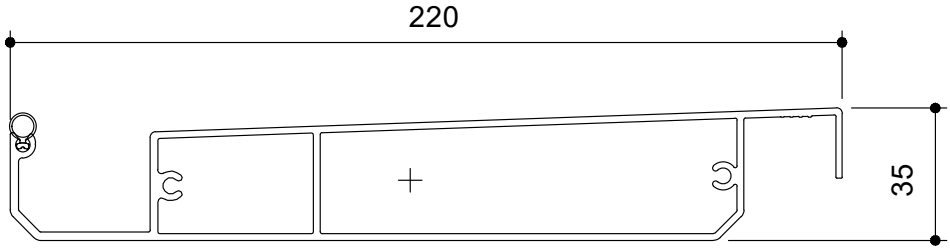

NTS

BLADE SPECIFICATIONS			
Blade cover - opening system	205 mm	Weight per linear metre - opening system	2.655 kg/lm
Weight per square metre - opening system	12.9 kg/sqm	Actual blade width	220 mm
Blade centres - opening system	205 mm		

SPANS AT A GLANCE

Refer Engineering Section. Climate, terrain, shielding, location, type of structure contribute to determine spans.

WIND ZONE	INSIDE	LOW	MEDIUM	HIGH	VERY HIGH	EXTRA HIGH
Factored wind speed at building	Self wt	32 m/s	37m/s	44 m/s	50 m/s	55 m/s
		115 km/hr	133 km/hr	158 km/hr	179 km/hr	198 km/hr
Louvretec 220 opening slimline roof **3m Height**	4300	4300	4300	4200	4000	3500
Louvretec 220 opening slimline roof **6m Height**		4300	4300	4050	3500	3150

INSTALLATION OPTIONS

CALCULATE OPTIMUM FRAME OPENING SIZES FOR SPIRAL PIVOT

Span: Check engineering span limits

Pivot: Calculation example showing 17 blades

STEP 1

16 blades x 205 Crs	3280
1 blade at 220 (blade size)	+ 220
17 blades	=3500

STEP 2

Blade cover	3500
+2/22mm clearance @ ends	=44
Total exact pivot length	=3544

Extra width 185mm gutter provides cover if clearance increases over 22mm at ends.

Blade direction either Right Hand up or Left Hand up.

CHOOSE DIRECTION OF BLADE PIVOT

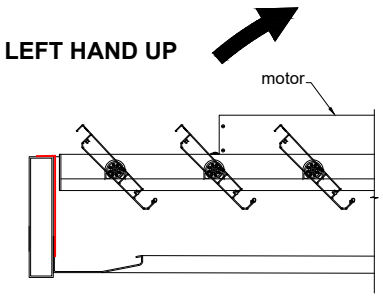

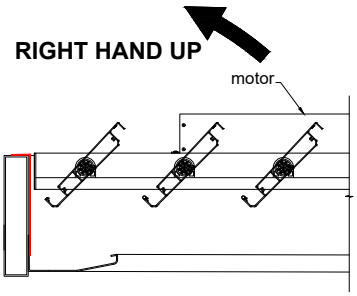

©Louvretec 2025 – All Rights Reserved. Technical specifications subject to change without notice.

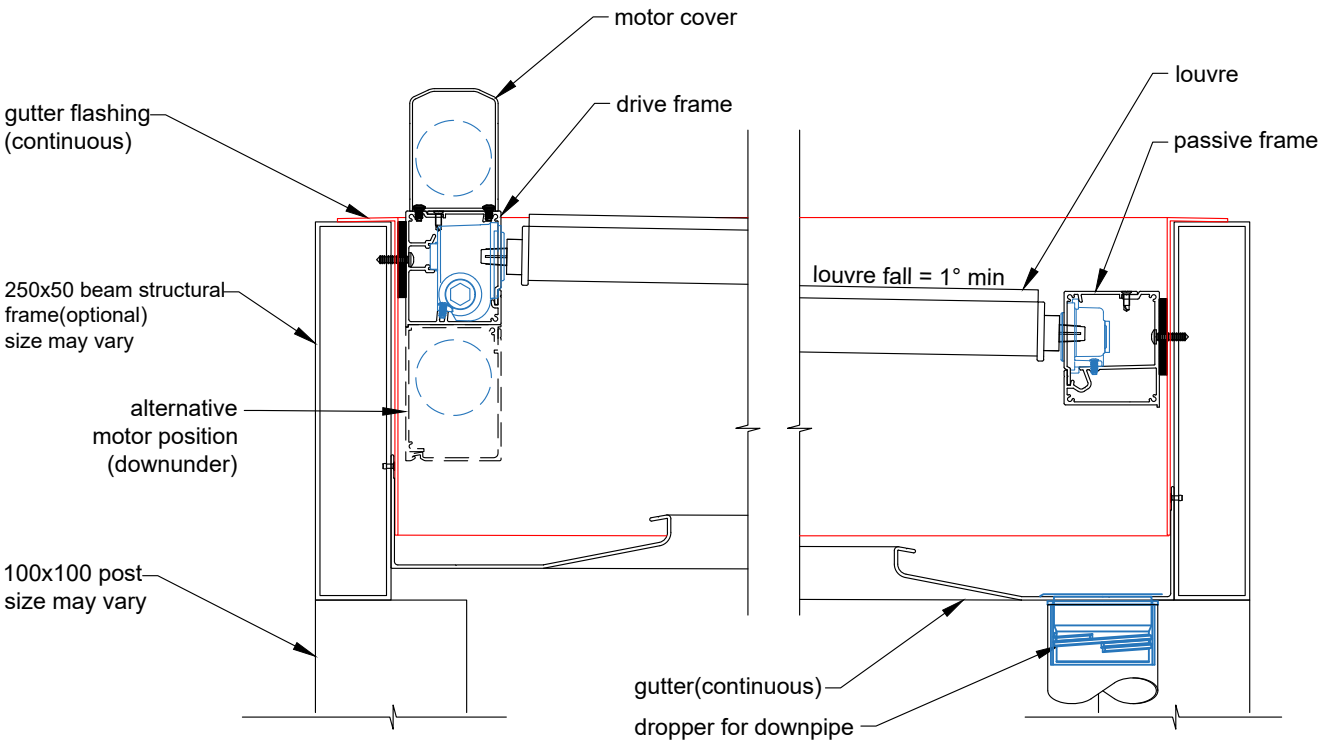

SECTION THROUGH SPAN

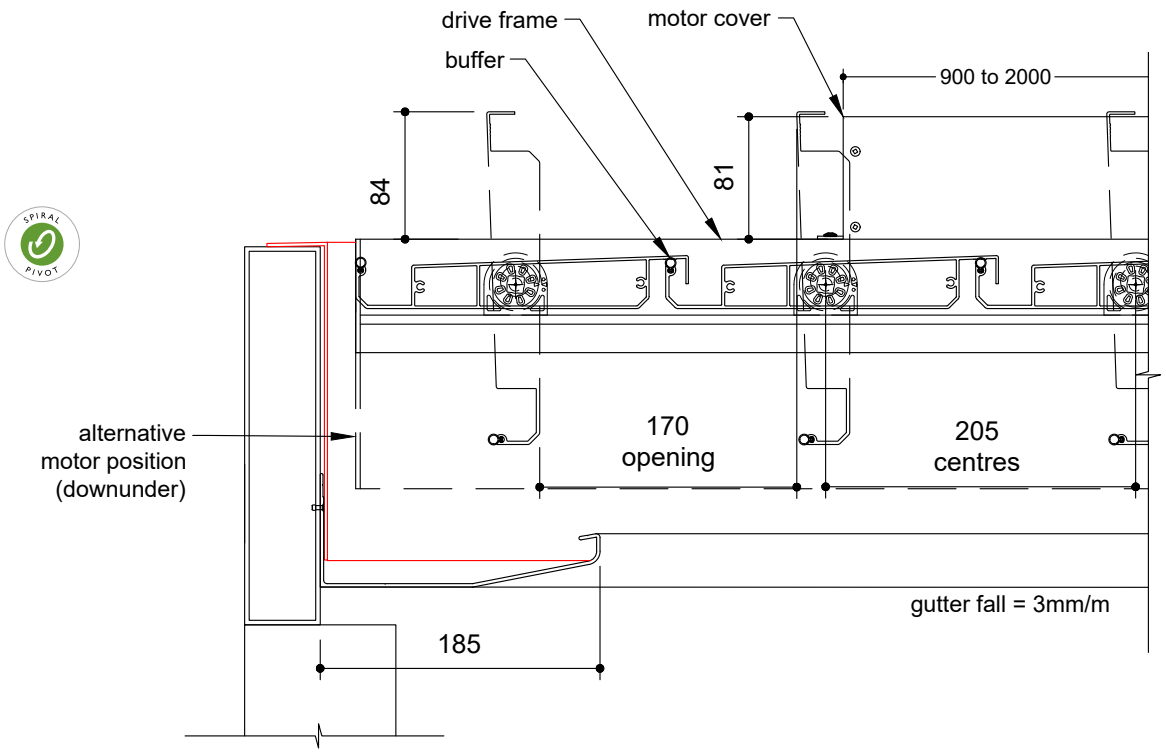

SECTION THROUGH LOUVRES

©Louvretec 2025 – All Rights Reserved. Technical specifications subject to change without notice.

TYPICAL DETAIL : Manual Louvretec 220 opening slimline roof within Louvretec structural frame

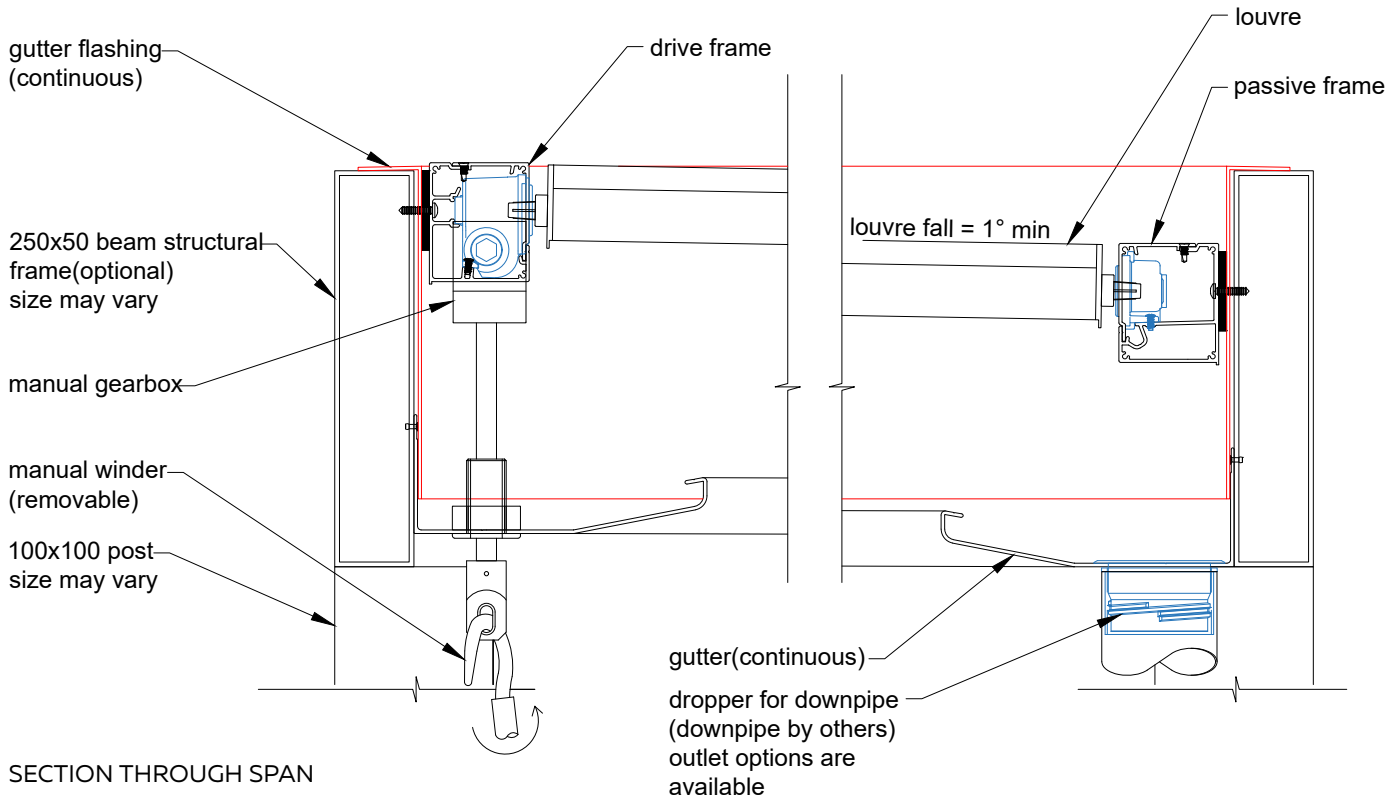

SECTION THROUGH SPAN

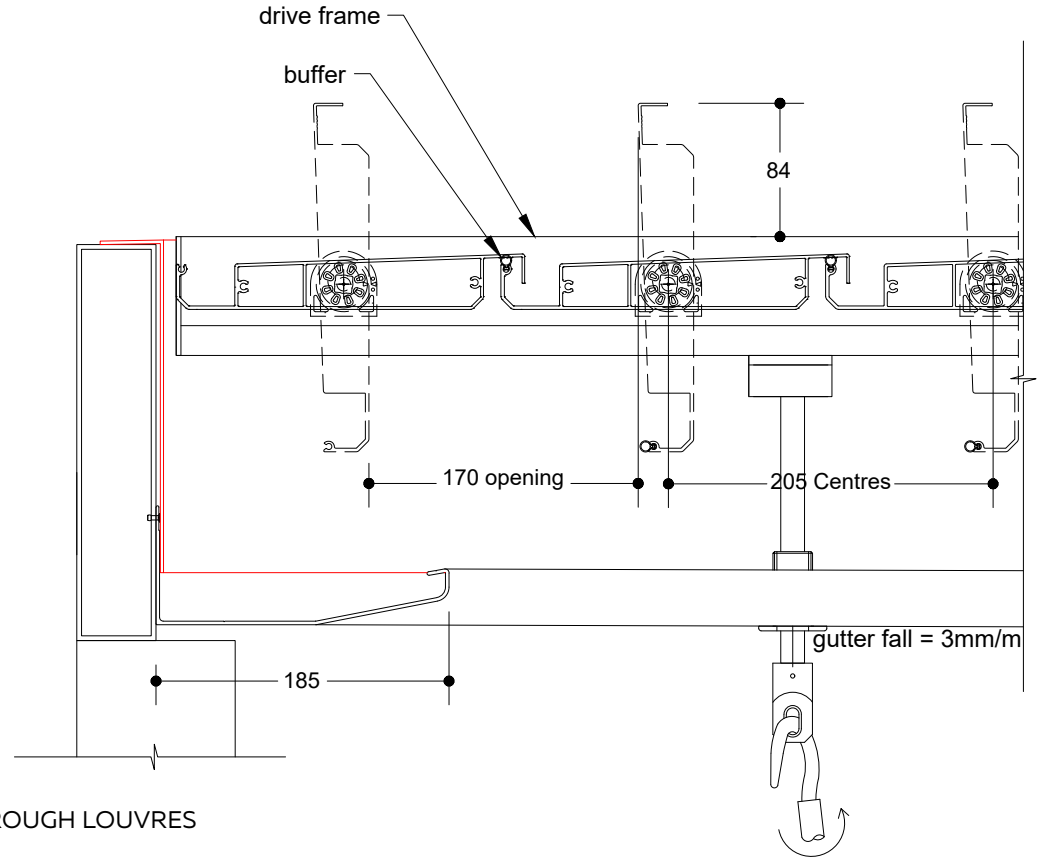

SECTION THROUGH LOUVRES

FILE: OPENING ROOFS 2.30 DATE MODIFIED: 01/10/2026 SCALE:

www.louvretec.co.nz www.louvretec.com.au

©Louvretec 2025 - All Rights Reserved. Technical specifications subject to change without notice.





EVERYTHING HAS A FLOW TO THE OUTDOORS
BY LOUVRETEC CANTERBURY



Louvretec 220/45 opening alpine* roof blade

- Due to it's extended span capabilities, a 20x3 end cap connecting bar is fitted below the blade to eliminate any individual blade movement in extreme conditions
- Available Spiral Pivot Opening Roof or Retract Roof

SPIRAL PIVOT RETRACT

Louvretec 220/45 opening alpine* roof

**For larger spans, typically alpine and coastal locations*

An award winning, multi-purpose Louvre blade compatible as a Spiral Pivot or Retract Roof.

The award winning Louvretec 220/45 opening alpine* roof features a multi-purpose roof blade compatible as a Spiral Pivot or a Retract Roof. This Opening Roof leads the way with outstanding spanning capabilities, ideal for high wind zone and alpine regions.

Key Features

- Winner of the Window Shading Association of Australia (WSAA) Product Innovation Award, 2026
- Each blade top-tapers to 45mm high
- Blade is compatible as a Spiral Pivot or Retract Roof
- *For larger spans, typically alpine and coastal locations
- Sleek, functional design, clean and uncluttered when open or closed
- Design strength of an extruded double box-section
- Available Motorised using Somfy Motorisation, or hand-operated
- Features our award winning Spiral Pivot drive system, keeping mechanisms hidden
- "Cushion Closing" onto an external sun-resistant PVC bulb seal
- Increased closing cover angle for added weather protection
- Larger blade gutter incorporated for extra storm-water dispersal
- This Roof is a larger spanning version of the Louvretec 220 opening slimline roof

MOTORISED OR HAND OPERATED

Controller and Sensor Options Refer Pages 2.17 - 2.18 for range of options





SURFACE FINISHING OPTIONS

A wide range of options are available.

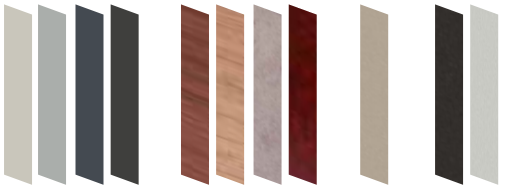

POWDERCOAT | WOODGRAIN & SPECIAL FINISHES | METALLIC | ANODISED

©Louvretec 2025 - All Rights Reserved. Technical specifications subject to change without notice.



BLADE SPECIFICATIONS Louvretec 220/45 opening alpine* roof blade (Retract compatible)

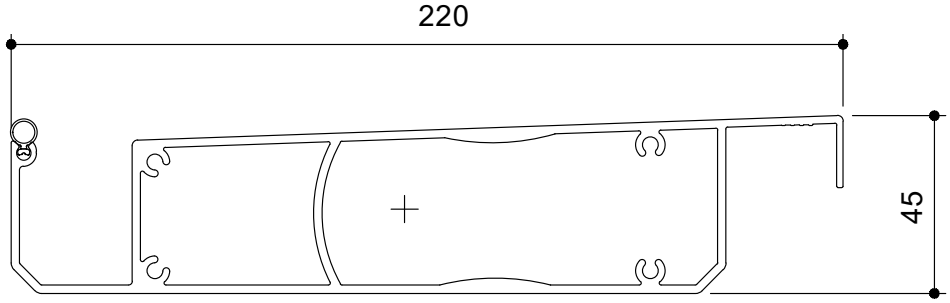

*For larger spans, typically alpine and coastal locations NTS

BLADE SPECIFICATIONS			
Blade cover - opening system	205 mm	Weight per linear metre - opening system	3.74 kg/lm
Weight per square metre - opening system	18.2 kg/sqm	Actual blade width	220 mm
Blade centres - opening system	205 mm		

SPANS AT A GLANCE

Refer Engineering Section. Climate, terrain, shielding, location, type of structure contribute to determine spans.

WIND ZONE	INSIDE	LOW	MEDIUM	HIGH	VERY HIGH	EXTRA HIGH
Factored wind speed at building	Self wt	32 m/s	37m/s	44 m/s	50 m/s	55 m/s
		115 km/hr	133 km/hr	158 km/hr	179 km/hr	198 km/hr
Louvretec 220/45 opening alpine* roof **3m Height**	5000	5000	5000	5000	5000	5000
Louvretec 220/45 opening alpine* roof **6m Height**		5000	5000	5000	5000	4700

INSTALLATION OPTIONS

CHOOSE DIRECTION OF BLADE PIVOT

LEFT HAND UP

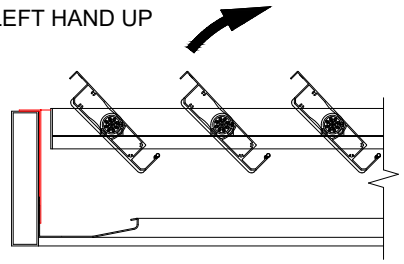

RIGHT HAND UP

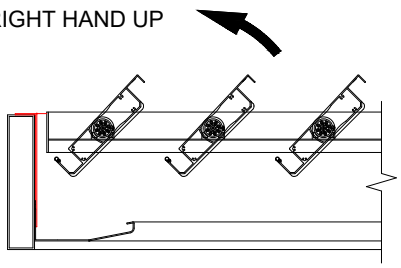

CALCULATE OPTIMUM FRAME OPENING SIZES FOR SPIRAL PIVOT

Span: Check engineering span limits

Pivot: Calculation example showing 17 blades

STEP 1

16 blades x 205 Crs	3280
1 blade at 220 (blade size)	+ 220
17 blades	= 3500

STEP 2

Blade cover	3500
+2/22mm clearance @ ends	+ 44
Total exact pivot length	= 3544

Extra width 185mm gutter provides cover if clearance increases over 22mm at ends.

Blade direction either right hand up or left hand up.

©Louvretec 2025 – All Rights Reserved. Technical specifications subject to change without notice.

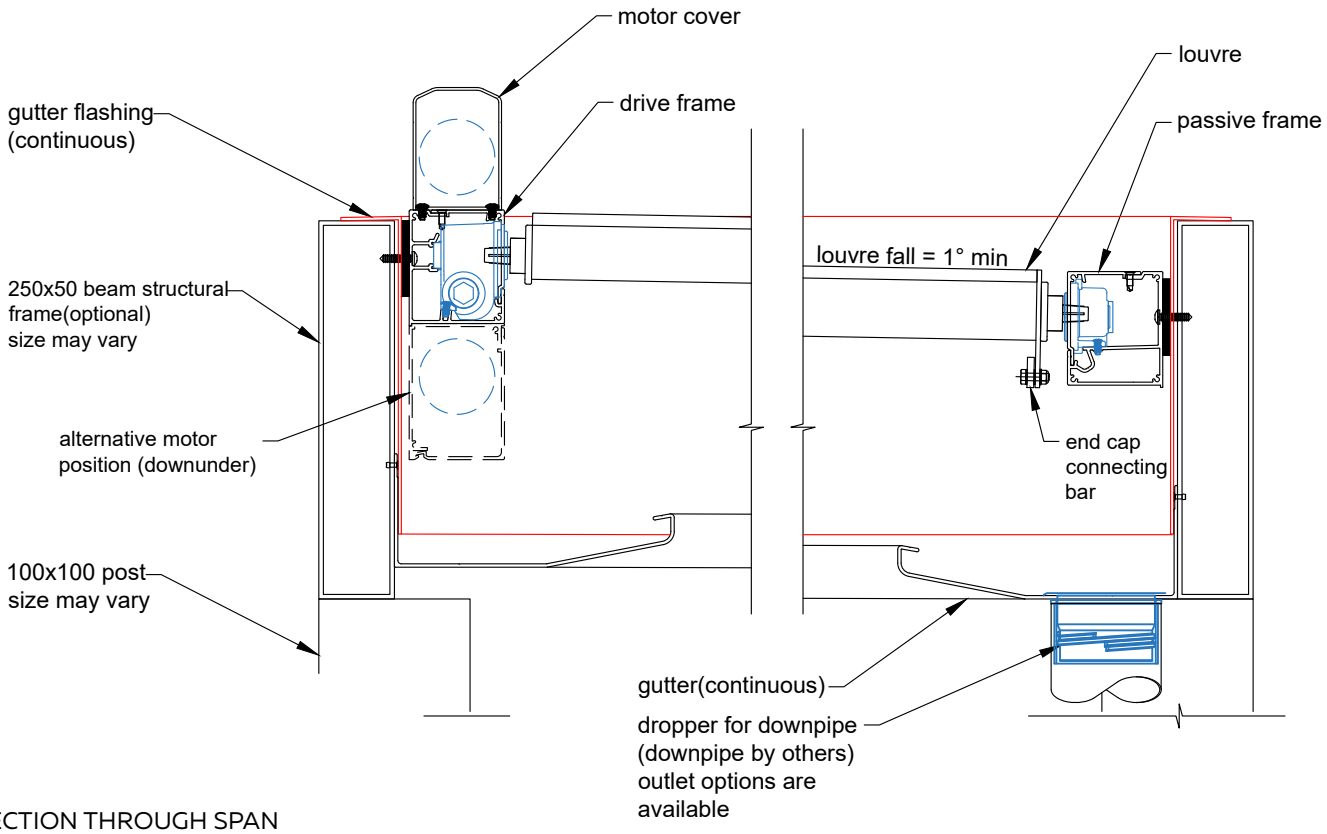

SECTION THROUGH SPAN

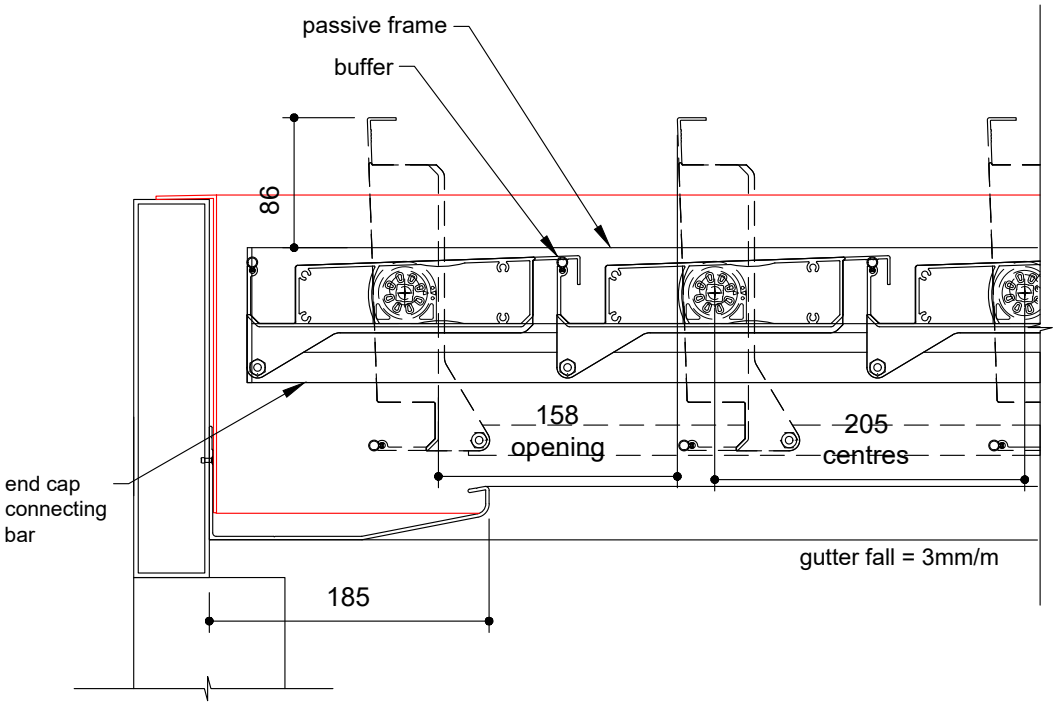

SECTION THROUGH LOUVRES

©Louvretec 2025 – All Rights Reserved. Technical specifications subject to change without notice.

TYPICAL DETAIL : Manual Louvretec 220/45 opening alpine* roof, within Louvretec structural frame

*For larger spans, typically alpine and coastal locations

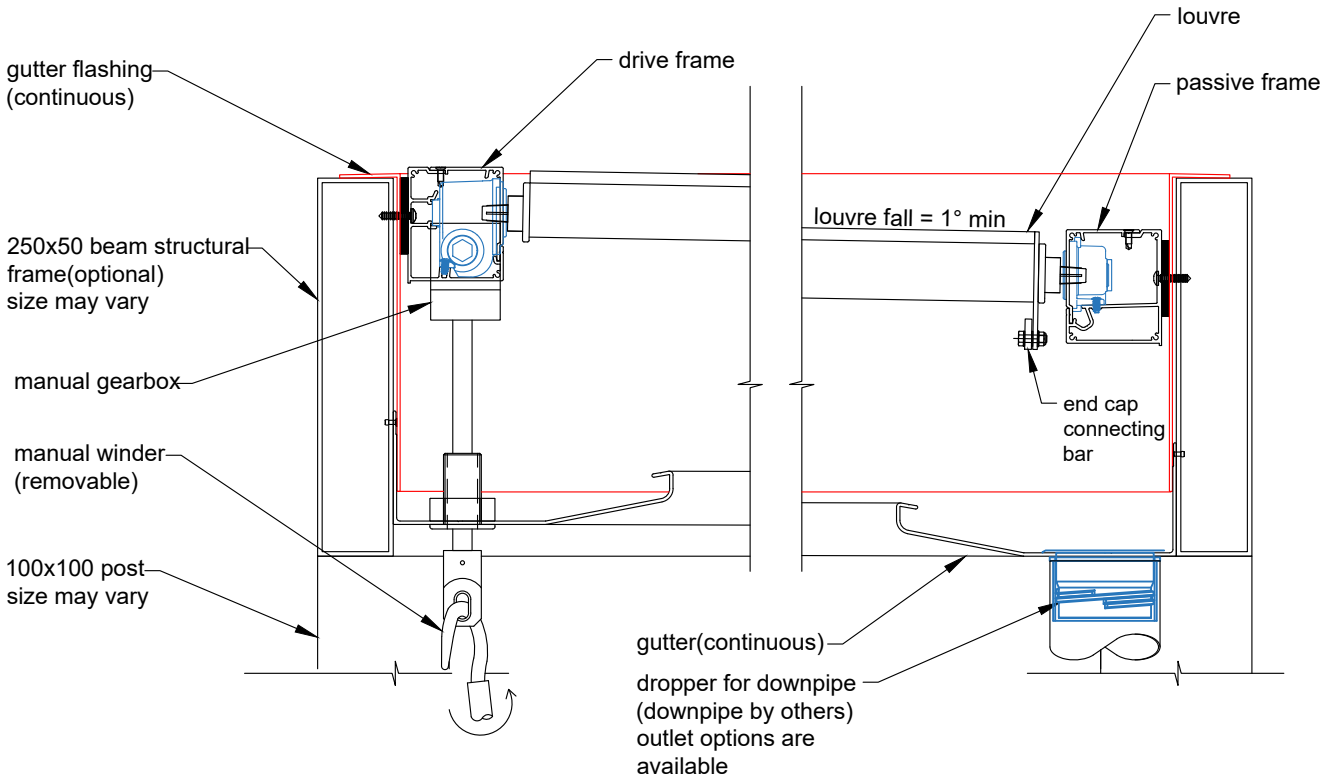

SECTION THROUGH SPAN

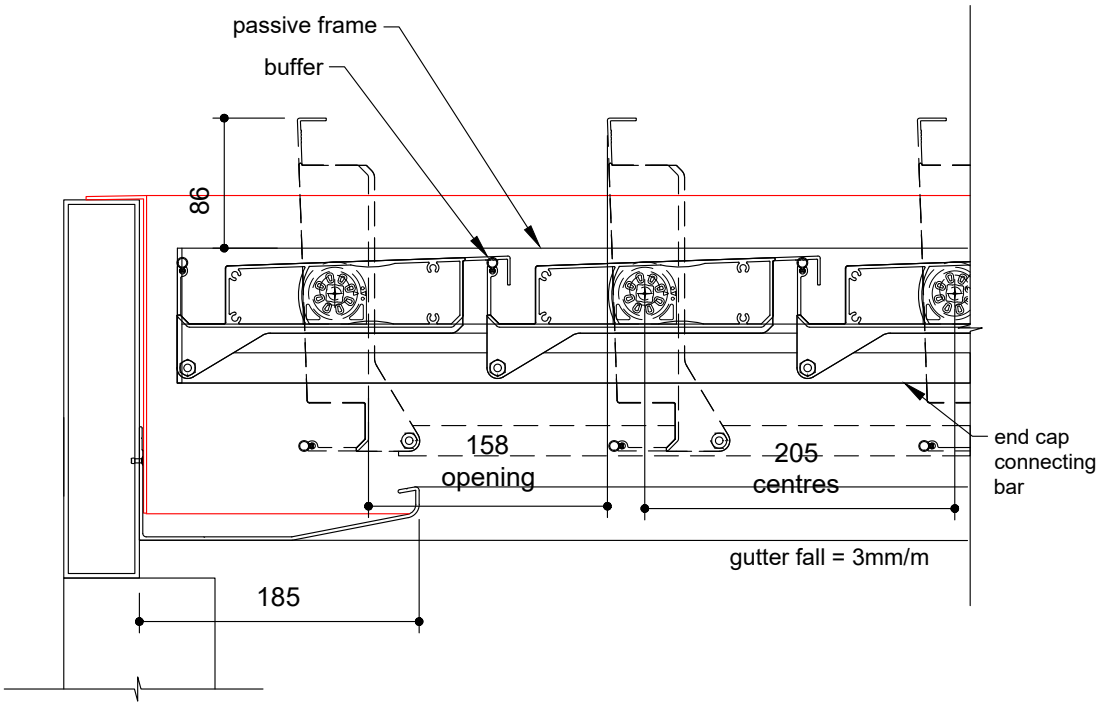

SECTION THROUGH LOUVRES

FILE: OPENING ROOFS 2.34 DATE MODIFIED: 01/10/2026 SCALE:

www.louvretec.co.nz www.louvretec.com.au

©Louvretec 2025 - All Rights Reserved. Technical specifications subject to change without notice.





SUBURBAN ROOFS BRINGING CONTROLLABLE SHADE & STYLE. BY LOUVRETEC ADELAIDE

Louvretec 200 **opening suburban*** **roof**

**Designed with economy in mind*

All the essentials

Designed with quality and economy in mind the Louvretec 200 opening suburban roof blades provide wide spanning capabilities, and has been an extremely well specified Opening Roof for many years. It's a firm favourite.

Key Features

- Available Motorised using Somfy Motorisation, or hand-operated
- The Louvretec 200 opening suburban roof comes with an extruded motor cover and a 185mm extra wide gutter to all four sides as standard.
- Sleek, functional design, clean and uncluttered when open or closed
- Louvres open up to 170 degrees
- Features our award winning Spiral Pivot drive system, keeping mechanisms hidden
- Using the highest grade aluminium every aspect is fully engineered and backed by Louvretec's Opening Roof Warranty



Louvretec 200 opening suburban roof blade



Louvretec 200
opening suburban roof
BLADES CLOSED



Louvretec 200
opening suburban roof
BLADES OPENING

MOTORISED OR HAND OPERATED

Controller and
Sensor Options
Refer Pages
2.17 - 2.18
for range of options





SURFACE FINISHING OPTIONS

A wide range of options are available.

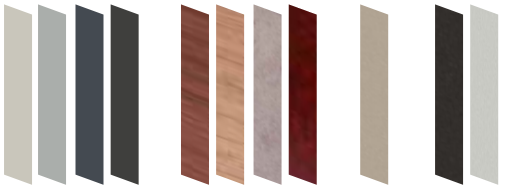

POWDERCOAT | WOODGRAIN & SPECIAL FINISHES | METALLIC | ANODISED

©Louvretec 2025 - All Rights Reserved. Technical specifications subject to change without notice.



BLADE SPECIFICATIONS Louvretec 200 opening suburban roof blade

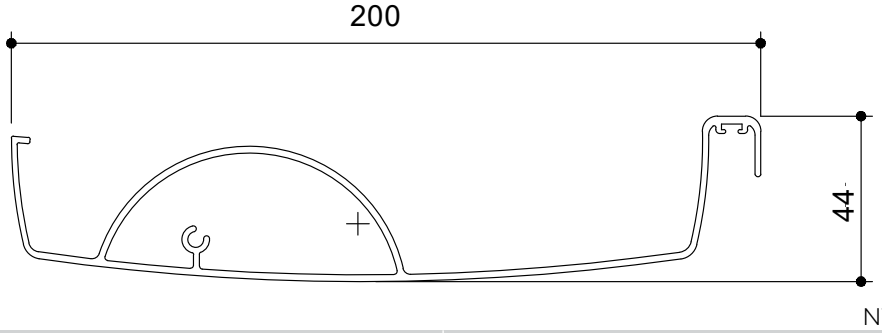

NTS

BLADE SPECIFICATIONS			
Blade cover - opening system	188 mm	Weight per linear metre - opening system	1.928 kg/lm
Weight per square metre - opening system	10.25 kg/sqm	Actual blade width	200 mm
Blade centres - opening system	188 mm		

SPANS AT A GLANCE

Refer Engineering Section. Climate, terrain, shielding, location, type of structure contribute to determine spans.

WIND ZONE	INSIDE	LOW	MEDIUM	HIGH	VERY HIGH	EXTRA HIGH
Factored wind speed at building	Self wt	32 m/s	37m/s	44 m/s	50 m/s	55 m/s
		115 km/hr	133 km/hr	158 km/hr	179 km/hr	198 km/hr
Louvretec 200 opening suburban roof **3m Height**	4500	4500	4500	4000	3600	3300
Louvretec 200 opening suburban roof **6m Height**		4500	4500	3800	3250	3000

INSTALLATION OPTIONS

CHOOSE DIRECTION OF BLADE PIVOT

LEFT HAND UP

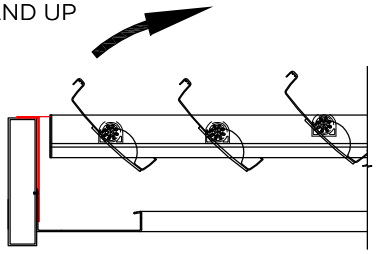

RIGHT HAND UP

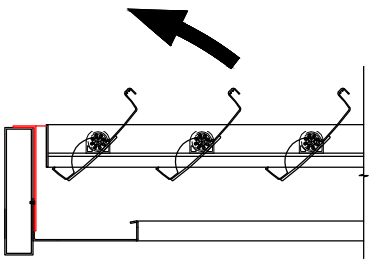

CALCULATE OPTIMUM FRAME OPENING SIZES FOR SPIRAL PIVOT

Span: Check engineering span limits

Pivot: Calculation example showing 17 blades

STEP 1

16 blades x 188 Crs	3008
1 blade at 200 (blade size)	+ 200
17 blades	= 3208

STEP 2

Blade cover	3208
+2/22mm clearance @ ends	= 44
Total exact pivot length	= 3252

Extra width 185mm gutter provides cover if clearance increases over 22mm at ends.

Blade direction either Right Hand up or Left Hand up.

©Louvretec 2025 – All Rights Reserved. Technical specifications subject to change without notice.

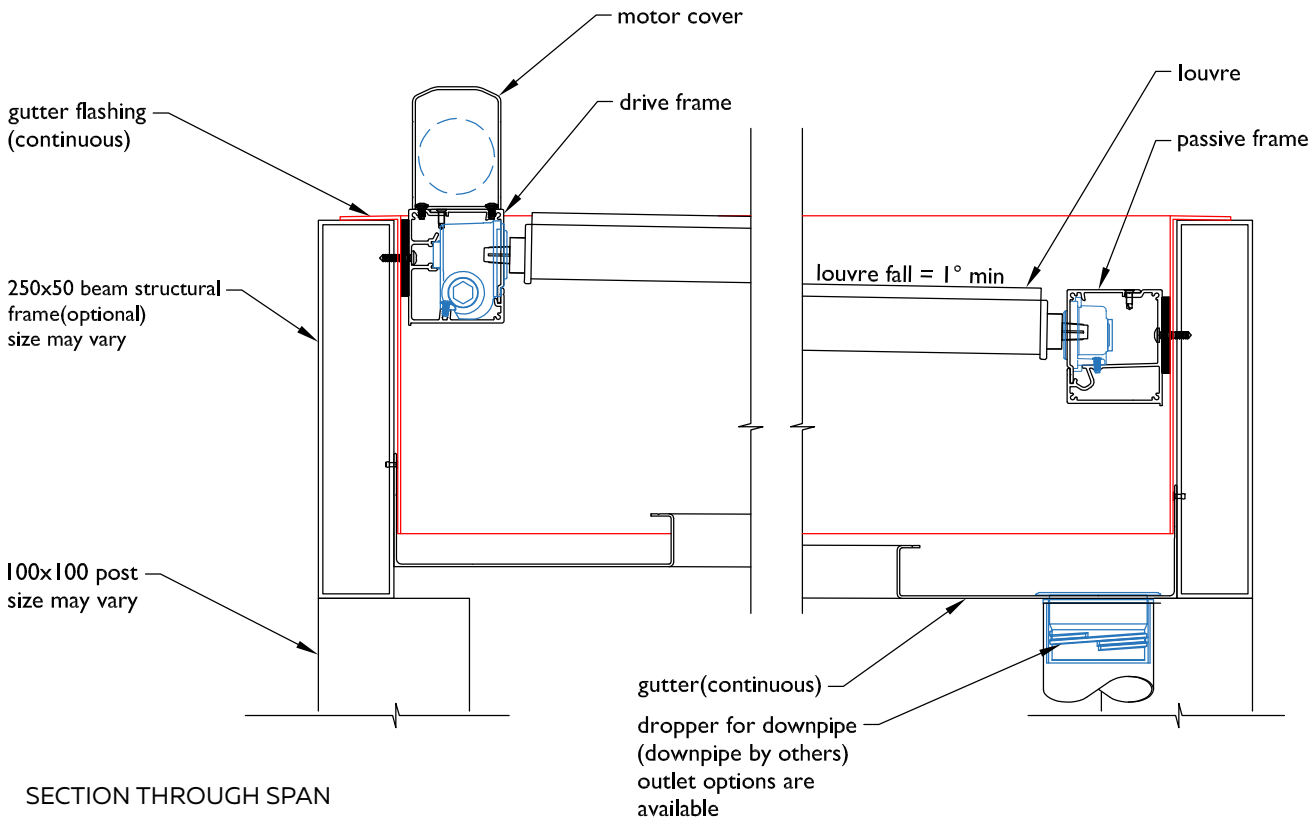

SECTION THROUGH SPAN

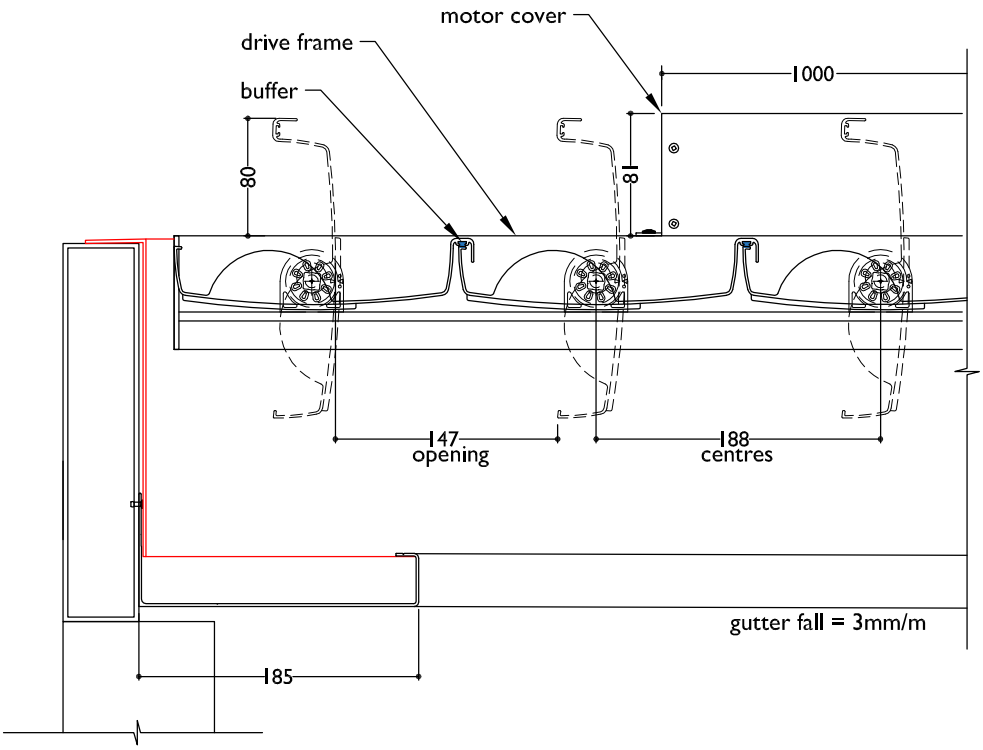

SECTION THROUGH LOUVRES

©Louvretec 2025 – All Rights Reserved. Technical specifications subject to change without notice.

TYPICAL DETAIL : Manual Louvretec 200 opening suburban roof within Louvretec structural frame

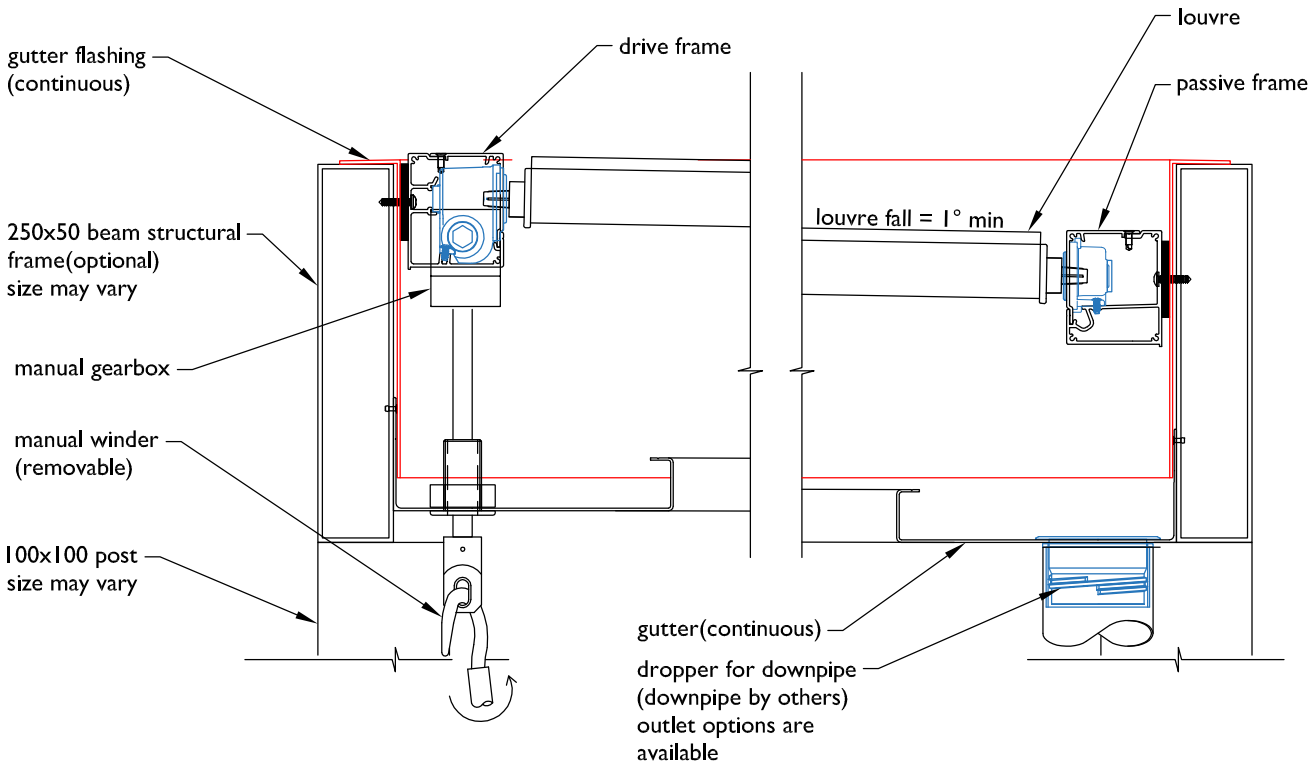

SECTION THROUGH SPAN

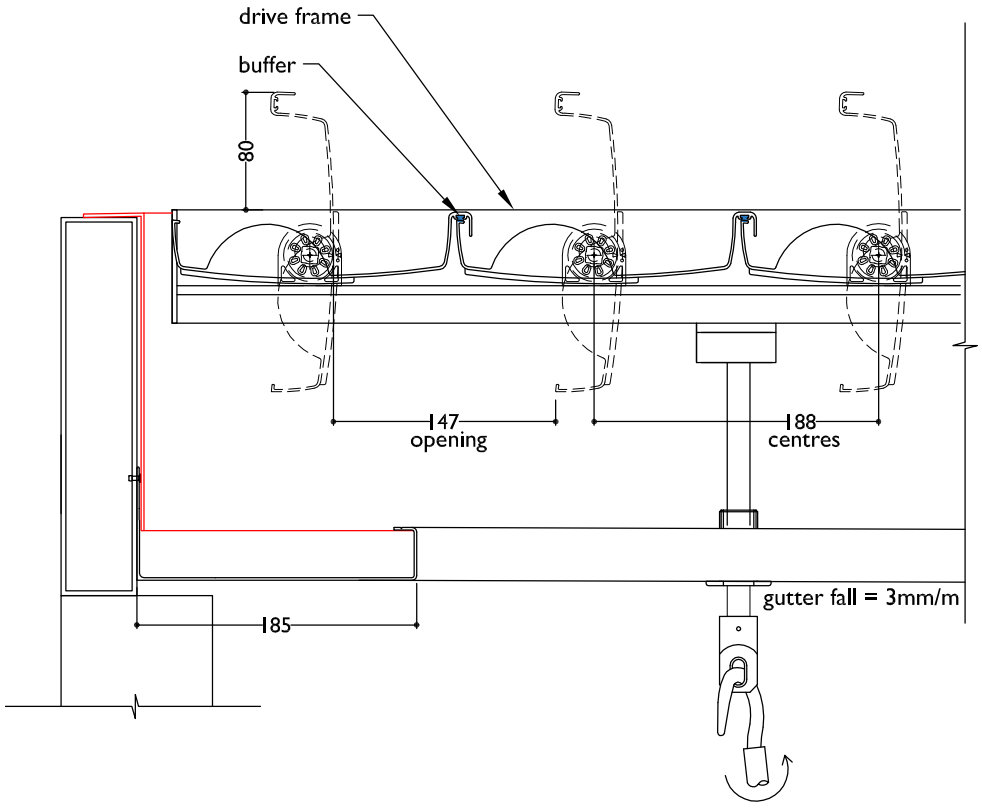

SECTION THROUGH LOUVRES

FILE: OPENING ROOFS 2.38 DATE MODIFIED: 01/10/2026 SCALE:

www.louvretec.co.nz www.louvretec.com.au

©Louvretec 2025 - All Rights Reserved. Technical specifications subject to change without notice.

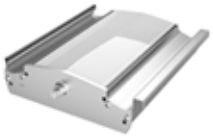



A FILTERED LIGHT-FILLED OUTDOOR ROOM
BY LOUVRETEC AUCKLAND



Louvretec 270 opening translucent roof blade

Louvretec 270 opening translucent* roof

**Creates a tranquil, light filled outdoor room*

Let there be light

If loss of light is an issue when the Opening Roof is closed, the unique Louvretec 270 opening translucent roof provides a great solution.

This opening roof has been re-designed to include "Cushion Closing" on to an external sun-resistant bulb seal.
The Louvretec 270 opening translucent roof also features a beautiful, white in-fill panel of Acrylic Naturelite Plexiglas.

Plexiglas offers natural UV protection throughout the material, it does not rely on an applied surface coating for UV protection. It is one of the reasons Plexiglas is used in aircraft cabin windows to protect from strong UV light and substantial differences in pressure and extreme cold.

This same material is now used on Louvretec 270 translucent openign roofs - high light transmission coupled with naturally UV-stable technology is as good as it gets!

This style of Opening Roof now comes with a 185mm extra wide gutter to all four sides as standard.



Louvretec 270
opening translucent roof
BLADES CLOSED



Louvretec 270
opening translucent roof
BLADES OPENING

MOTORISED OR HAND OPERATED
Controller and
Sensor Options
Refer Pages
2.17 - 2.18
for range of options





SURFACE FINISHING OPTIONS
A wide range of options are available.

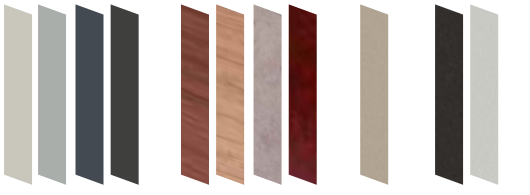

POWDERCOAT | WOODGRAIN & SPECIAL FINISHES | METALLIC | ANODISED

©Louvretec 2025 - All Rights Reserved. Technical specifications subject to change without notice.



BLADE SPECIFICATIONS Louvretec 270 opening translucent roof blade

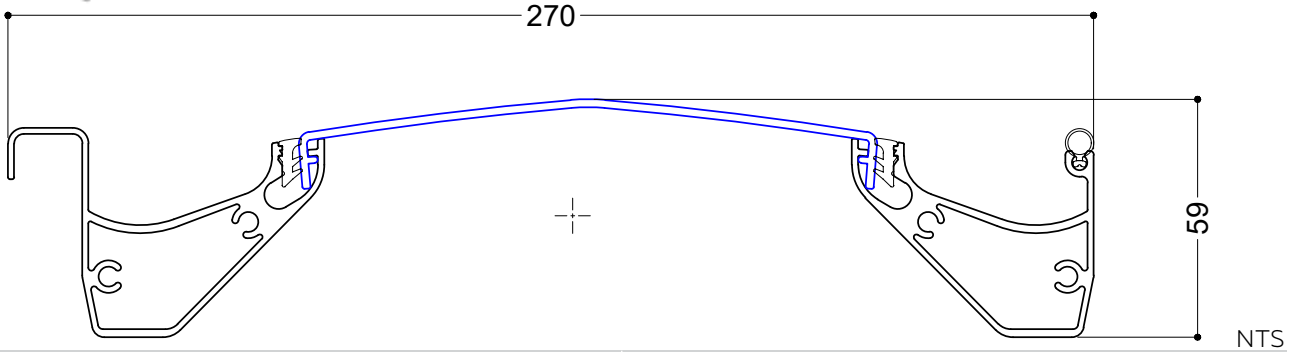

BLADE SPECIFICATIONS			
Blade cover - opening system	256 mm	Weight per linear metre - opening system	2.4 kg/lm
Weight per square metre - opening system	9.4 kg/sqm	Actual blade width	270 mm
Blade centres - opening system	256 mm		

SPANS AT A GLANCE

Refer Engineering Section. Climate, terrain, shielding, location, type of structure contribute to determine spans.

WIND ZONE	INSIDE	LOW	MEDIUM	HIGH	VERY HIGH	EXTRA HIGH
Factored wind speed at building	Self wt	32 m/s	37m/s	44 m/s	50 m/s	55 m/s
		115 km/hr	133 km/hr	158 km/hr	179 km/hr	198 km/hr
Louvretec 270 opening translucent roof **3m Height**	4500	4500	4500	4000	3500	3250
Louvretec 270 opening translucent roof **6m Height**		4500	4500	3550	3250	3000

INSTALLATION OPTIONS

CHOOSE DIRECTION OF BLADE PIVOT

LEFT HAND UP

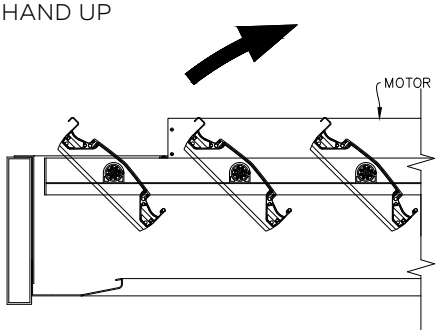

RIGHT HAND UP

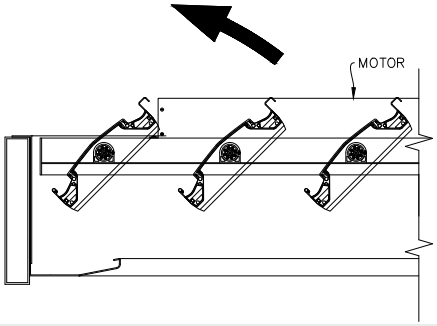

CALCULATE OPTIMUM FRAME OPENING SIZES FOR SPIRAL PIVOT

Span: Check engineering span limits

Pivot: Calculation example showing 17 blades

STEP 1

16 blades x 256 Crs	4096
1 blade at 270 (blade size)	+ 270
17 blades	= 4366

STEP 2

Blade cover	4366
+2/22mm clearance @ ends	= 44
Total exact pivot length	= 4410

Extra width 185mm gutter provides cover if clearance increases over 22mm at ends.

Blade direction either Right Hand up or Left Hand up.

©Louvretec 2025 – All Rights Reserved. Technical specifications subject to change without notice.

TYPICAL DETAIL: Motorised Louvretec 270 opening translucent roof within Louvretec structural frame

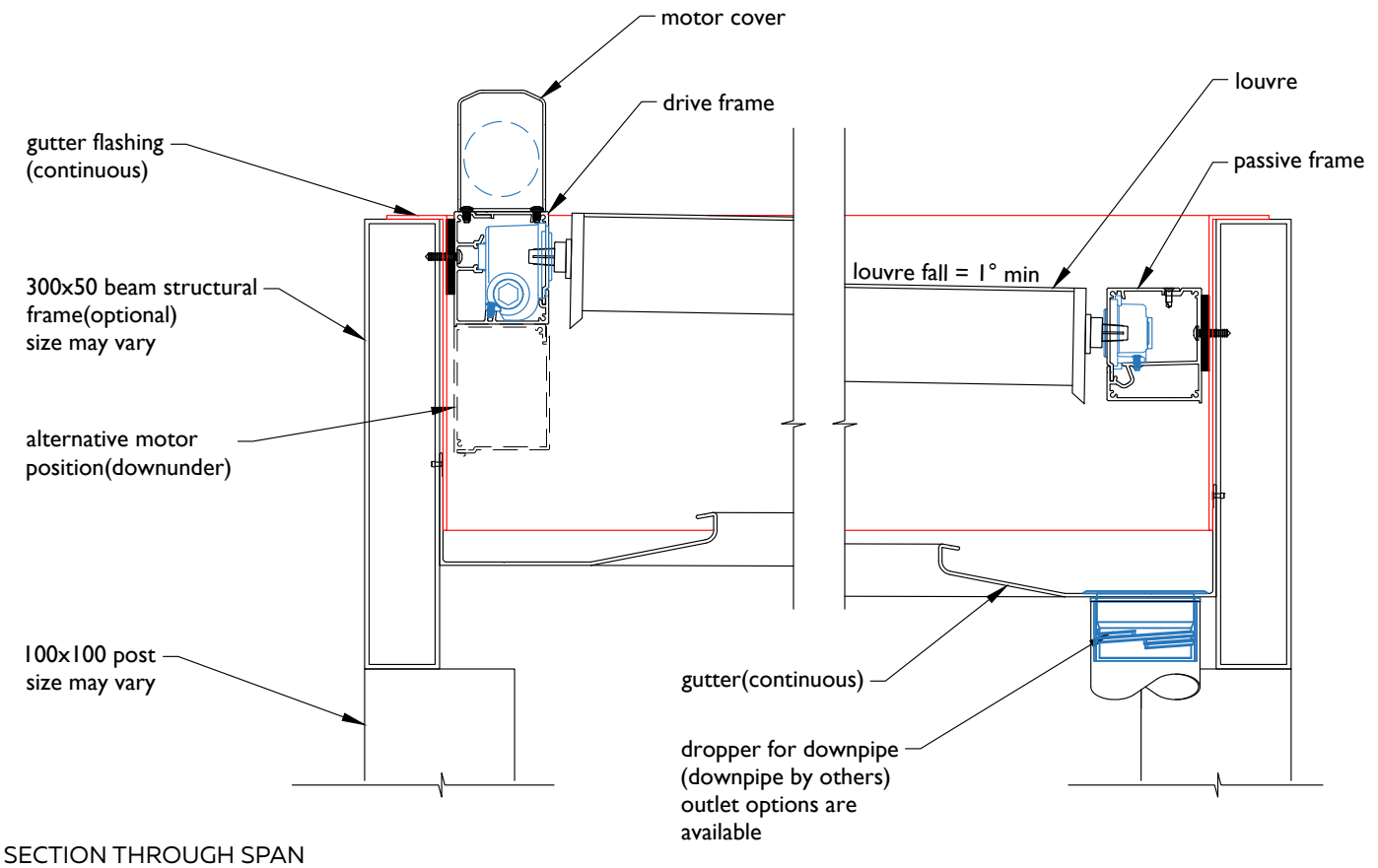

SECTION THROUGH SPAN

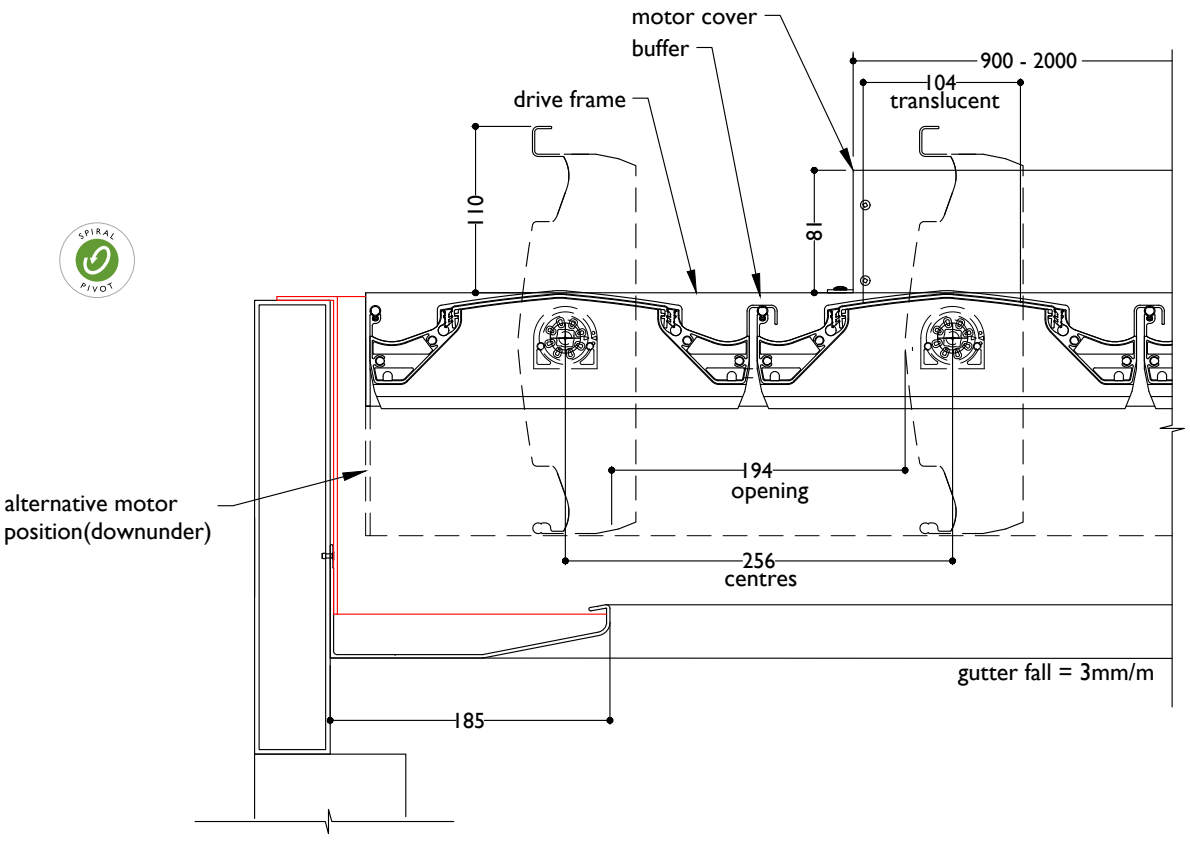

SECTION THROUGH LOUVRES

©Louvretec 2025 – All Rights Reserved. Technical specifications subject to change without notice.

TYPICAL DETAIL : Manual Louvretec 270 opening translucent roof within Louvretec structural frame

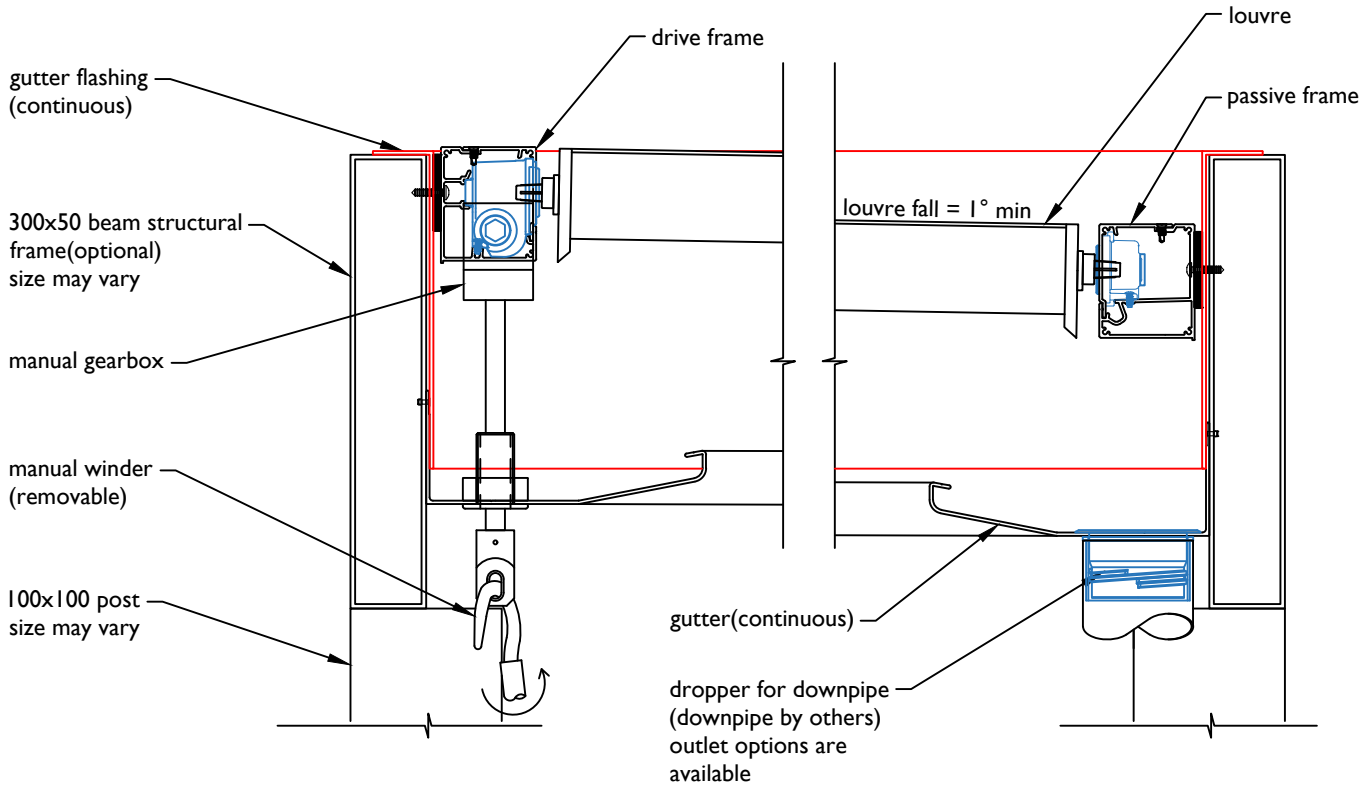

SECTION THROUGH SPAN

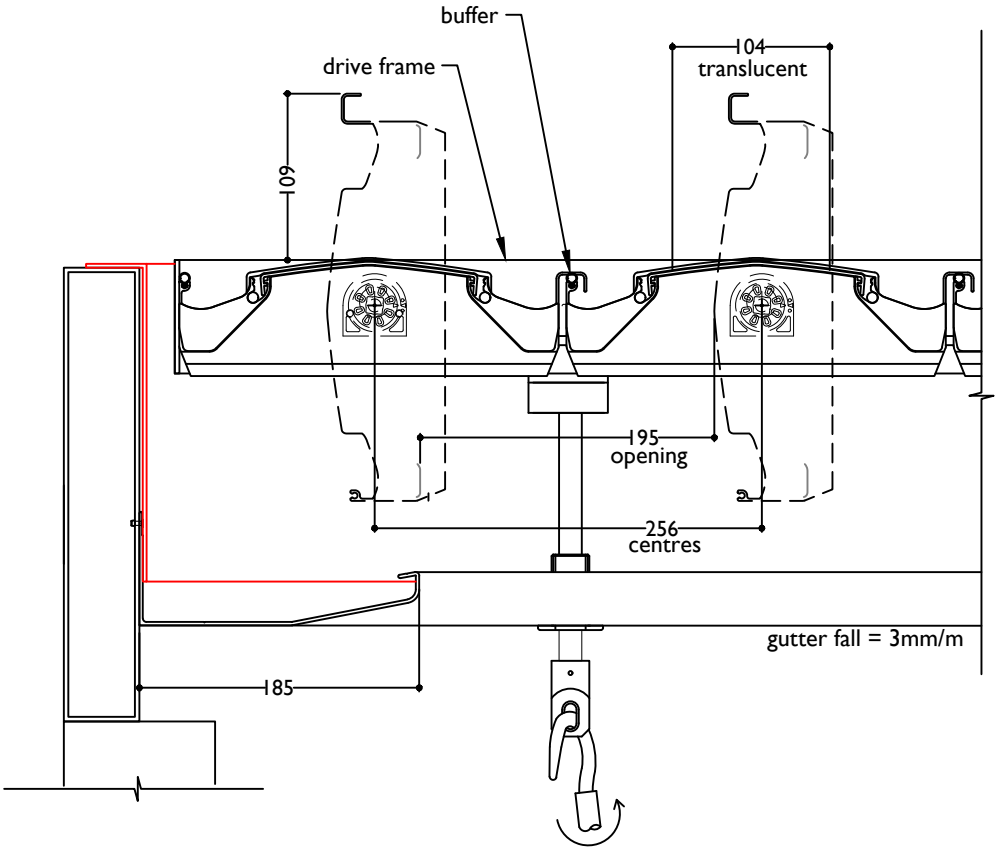

SECTION THROUGH LOUVRES

FILE: OPENING ROOFS 2.42 DATE MODIFIED: 01/10/2026 SCALE:

www.louvretec.co.nz www.louvretec.com.au

©Louvretec 2025 - All Rights Reserved. Technical specifications subject to change without notice.

LOUVRETEC PRODUCT WARRANTY

OPENING ROOFS - SUN LOUVRES - SHUTTERS

The Louvretec range of products:

All Louvretec branded products are designed and engineered in Australia & New Zealand by Louvretec to comply with relevant AS/NZS standards - refer to full Louvretec Engineering data Design Manual 2025 Section 13.

Louvretec has the most extensive range of outdoor sun shading/ outdoor living products available in Australasia, backed by a comprehensive network of Louvretec Dealers.

Most Louvretec products sold in Australia are made in Australia*

Most Louvretec products sold in New Zealand are made in New Zealand*

*Some specialised products may only be made in Australia or in NZ and are shipped between each country.

The Authorised Louvretec Dealer Network:

Your Louvretec product will have been supplied and installed by your local Authorised Louvretec Dealer. All Louvretec Dealerships are privately owned, and the same Louvretec Dealer who supplied your Louvretec will also service your Louvretec.

Your Louvretec product has been "Engineered for Life" and we are committed to ensuring that happens.

Louvrecare:

Preventative maintenance and valet. Regular scheduled servicing by a Louvrecare team has real benefits. Louvrecare can vary between Dealerships - consult your local Louvretec Dealer.

LouvreCare
PREVENTATIVE MAINTENANCE & VALET









Engineered for Life

LouvreTec®
OPENING & RETRACT ROOFS / SUN LOUVRES / SHUTTERS

©Louvretec 2025 - All Rights Reserved. Technical specifications subject to change without notice.

LOUVRETEC PRODUCT WARRANTY

EFFECTIVE FROM NOVEMBER 2026

HEAD OFFICE:
23c Douglas Alexander Pde, Albany, Auckland, New Zealand
T: +64 9 415 4949 E: info@louvretec.co.nz

OPENING ROOFS - SUN LOUVRES - SHUTTERS

warranty details & workmanship — 2 YEARS

All product installed by Louvretec (excluding Outdoor Blinds - please refer separate warranty for this) , or an Authorised Louvretec Installer, is from date of invoice, fully warranted for the first two years. This warranty covers workmanship, louvres and all componentry, motors, switches and electronics with all labour costs included. In addition, from year two to end of year five, a warranty replacement of parts only applies for all motors, switches and electronics. Labour costs excluded. (Excludes any wiring and electrical connections done by others).

motorisation — 5 YEARS

Louvretec exclusively uses Somfy motors, switches and electronics. Somfy offers a 5-year warranty on all motors and electronics.
Please contact Louvretec NZ or Somfy for a complete list of all terms and conditions.

product materials

All aluminium louvres and extrusions used in Louvretec's systems are manufactured in an ISO9002 quality assured environment to AS1866 & AS3902 standards. Marine grade T316 stainless steel is used for drive axles, with stainless steel componentry fixings being standard. Plastic injected moulded componentry is all UV stabilised.

powdercoat finishes — 15 YEARS

A wide range of exterior powder coat finishes are available. Different finishes carry different warranties, from 10 – 25 years, but is no less than 10years for Duralloy. Duralloy® +PLUS or equivalent is the standard finish supplied unless stated otherwise and this carries a 15 year film and colour integrity warranty as per the Dulux Powder and Industrial Coatings Warranty. If your project has used the Duratec powdercoat range please refer to the Dulux Powder and Industrial Coatings Warranty wording.

anodised finishes — 10 YEARS

The current specifications re anodised aluminium range from 12-20-25 microns depth. The greater the microns the better the protection. With regular cleaning anodised material will retain its original integrity for no less than 10 years.

fully engineered structural — 15 YEARS

Our louvre systems are designed to conform to New Zealand and Australian standards wind loadings. Full engineering details available on request.

The aluminium structure of your Opening Roof, Sun Louvre, and or Shutter system including the aluminium frame, beams, posts, and louvre blades, will be free from defects in materials that affect structural integrity for 15 years from the date of installation. What this covers: If the structure fails during the warranty period, Louvretec will, at its option, repair or replace the affected structure. Conditions: This warranty applies where the system has been installed by an Authorised Louvretec Dealer in accordance with our installation specifications and relevant building codes, and has been maintained in line with the Louvretec care and maintenance guide. What's not covered: Damage caused by misuse, accident, modification, or unauthorised repairs; storm, flood, or other events beyond design wind and load ratings; improper installation by non-authorised parties; normal wear and tear; and cosmetic changes such as minor weathering or colour variation.

cleaning

At least every 6 months cleaning is essential to remove dirt, grime and accumulated salt deposits from both powder coated and anodised surfaces. Three steps for cleaning are:
1. Carefully remove any loose deposits with a wet sponge
2. Use a soft, non-abrasive brush & mild household cleaning detergent solution to remove dust, salt & other deposits.
3. Rinse off with clean, fresh water

product description

_____
_____
_____

louvrecare

Louvrecare is a planned preventative maintenance and valet service designed to keep your Louvretec product clean and in good working order. Contact your Louvretec Dealer for full details.

effective from

Warranty effective from _____/_____/_____

Louvretec Representative _____ Print name _____

Site Address _____

DATE MODIFIED: 01/10/2026

©Louvretec 2025 – All Rights Reserved. Technical specifications subject to change without notice.

